ADDITIONS & UPDATES

From 1st of February 2017

ADDITIONS

A Tasmanian Supra gearbox conversion
Alfin rear brake drums.
Badge bar
BJ8 master cylinder fitted in a 100
Blown head gasket
Cibe headlights.
Cigarette lighter sockets.
Engine reconditioned & balanced
Fluted bonnet
Gearbox heat shield
GPS Speed Alert
Hard top hoist
Hard top sockets
Heater
Inertia reel seat belts
Inner sill repair.
Moto Lita steering wheel.
Radiator fan.
Radiator upgrade.
Rear spring lowering blocks.
Timing cover oil seal for 100

From 10th of January 2018

ADDITIONS
12 Volt Battery
Rear wheel hub stud replacement.
Ratio Box for speedo correction.
Dayton wire wheels.
Scuttle shake 2

100 TECHNICAL CD-ROM

INTRODUCTION

The Bookmarks are in alphabetical order, but the articles aren't in any particular order.

This is a compilation of articles I have found, been given or written, which are specifically for 100's, or are of a general nature that may be of interest to 100 owners. Every owner whether they are concourse, runner or modifier types should be able to find something of interest, there are over 550 pages so you have a lot of reading ahead of you.

I would like to thank Barry Campbell, Chris Dimmock, John Dowsett, John Harper and Ian Howard for permission to include their articles.

Barry's articles were published in Flat Chat (The Monthly Magazine of the Austin Healey Owner's Club of NSW (Inc) Australia.), similarly with Chris Dimmock's, John Dowsett's and Ian Howard's. John Harper's were published in Rev Counter the magazine of one of the English Clubs. Internet Downloads are from various websites. My articles are either titled Real Healey Natter (published in Flat Chat) or 100 Technical (this is their first publication).

The Austin Service Bulletins are from the collection of the Late Bill Johnstone and I would like to thank Margaret and Scott Johnstone for supplying them.

John Harper's Disclaimer - "Whilst every effort is made to check the information incorporated in this series, no responsibility can be accepted for errors" - should also be taken to apply to all the articles.

FOURS FOR EVER DON HARDIE

~~healeynut3@gmail.com~~

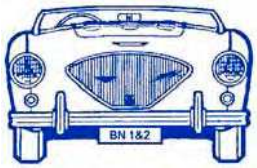

P.S.
I haven't tried all these ideas, so let me know if the ones you try work or don't.

MY MODIFICATIONS

Use bookmarks

AXLE (REAR)
3.66 crown wheel & pinion fitted it had a bad whine, so the original 4.125 was refitted with less whine..

BODYWORK
Badge bar.
Fluted bonnet.
Hardtop sockets.
Inertia reel seat belts.
Inner sill repair.
Fresh air Bilge Blower in cold air tube.
Heater - larger motor & fan.

BRAKES
Vacuum booster.
Front discs.
Speed bleeders to rear wheel cylinders.
Alfin rear drums.

CLUTCH
Rod end release rods.

COOLING SYSTEM
Texas Kooler fan.
Radiator with 90 more tubes, closer fins & electric auxiliary fan.
Water pump seal, sealed bearings.

ELECTRICAL EQUIPMENT

BATTERY 1 only12 volt

CIGARETTTE LIGHTER OUTLETS
One single and one dual.

DIRECTION INDICATORS
Fitting LED globes.
Front amber/white LED globes with relays.
Rear pods converted with amber light units & amber LEDs.

DRIVING & FOG
Replica Lucas Spot, Fog lights & relays.
Halogen Spot & Fog globes

DYNAMO
Lucas alternator fitted.

HEAD LAMPS
Cibe semi sealed units.
Halogen +50 blue headlight globes.
Stainless stone guards.
Headlight relays.

IGNITION
25D4 distributor
Pertronix electronic unit
Coil moved to steering column.
Silicone HT leads.

STOP/TAIL LIGHTS
Red LED globes.
High visibility stop light.

WINDSCREEN WIPERS
Self-parking switch.
Variable wiping delay unit.

ENGINE
Harmonic narrow belt balancer.
Timing cover oil seal.
A 70 cylinder head.
Valves for lead free fuel.
Flywheel lightened.
Engine balanced.
Spigot ball bearing installed in centre of flywheel.
Spin on oil filter.

FRONT HUBS AND INDEPENDENT FRONT SUSPENSION
King pin roller thrusts.
Tapered roller bearings to front hubs.
Telescopic shock absorbers.

FUEL SYSTEM
HS6 Carbys.
Cable throttle.
100M type cold air box & trunking.
Air cleaner behind grill.
Engine ventilation altered.
Reserve fuel pump
2 Facet fuel pumps.
Petrol tank vent.
Exhaust hangers.

GEARBOX
Toyota Celica 5 speed.

INSTRUMENTS
Blue LED globes.
Fuel gauge dampener.
GPS Speed Alert.

STEERING
Moto-Lita steering wheel.

SUSPENSION (REAR)
Lowering blocks.
Telescopic rear shock absorbers.

WHEELS AND TYRES
Chrome Dayton 50 spoke.

Don Hardie
14/02/2016
healeynut@hotmail.com

REAL HEALEY NATTER

100 ENGINE AND CHASSIS Nos.

OCTOBER 1997

A perusal of the just received Year Book showed that the 100 in front of me, and the one behind but one, on the assembly line at Longbridge are alive and well (?) and living in Western Australia.

A list was drawn up of all BN1's with chassis numbers beginning with 224 to see if anything else stood out, but all that was obvious was that there a lot of numberless cars on the states lists and South Australia showed only the Model. If any one can find some pattern or has a comment to make please send it to the Editor for Publication.

What stood out to me was that I am the only one without an original engine.

DAVID MOULD	N.S.W.	BN1/224020	1B224020M
ANDREW NOBLE	VIC.	BN1/224322	
RUSSELL SEDUNARY	N.S.W.	BN2/224323	1B224323
JOSEPH HOMSEY	VIC.	BN1/224315	1B224315
PETER RUTZOU	VIC.	BN1/224328	1B224328M
NOEL GORN	W.A.	BN1/224438	1B24438M
DMH 000	**N.S.W.**	**BN1/224439**	**1B219055M**
PETER TENNANT	W.A.	BN1/224441	1B224441
MAL BROWN	W.A.	BN1/224441?	
IAN HANCOCK	N.S.W.	BN1/224446	B224446
KENNETH STYLES	VIC.	BN1/224696	H1B224696
RICHARD BRAY	N.S.W.	BN1/224588	1B224588
DON STEVENS	W.A.	BN1/224894	H1B224894M

DMH-000
(The Hardie's 100)

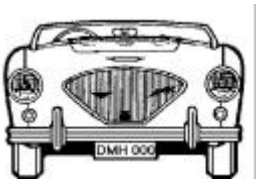

P.S. I don't know how a BN2 and two 224441's got in there, but I suspect Gremlins were helping the list makers.

INTERNET DOWNLOAD
LE MANS CONVERSION KIT
100 M PARTS LIST

THE BRITISH MOTOR CORPORATION (AUSTRALIA) PTY. LTD.

Group Companies

THE AUSTIN MOTOR COMPANY (AUSTRALIA) PTY. LIMITED NUFFIELD (AUSTRALIA) PTY. LIMITED

VICTORIA PARK
JOYNTON AVENUE
ZETLAND, N.S.W.

TELEPHONE FF 0321 - FF 0322
TELEGRAMS AND CABLES:
"BRITCORP." SYDNEY

SALES AND SERVICE DIVISION

AUSTIN WOLSELEY M.G. MORRIS

AR/PH/SEP:47A.

10th September, 1959.

Mr. R. Pettiford,
598 H omer Street,
KINGSGROVE.

Dear Sir,

re 1954 Series Austin Healey 100 (4).

We have for acknowledgment your correspondence dated September 1st concerning super tuning of an Austin Healey 100.

We apologise for the slight delay due to the information not being immediately at hand. However, we trust that the information as attached will be of assistance.

It is suggested that contact with our distributors, Larke Hoskins Pty.Ltd. be made regarding the supply of the required components. May be after perusal you will decide not to fit the full range but modify the specifications to suit your own requirements.

Yours faithfully,
THE AUSTIN MOTOR COMPANY (AUSTRALIA) PTY. LTD.

A. Rowe,
Service Technical Dept.

encl.

AUSTIN HEALEY HUNDRED MODEL B.N.1.

SPECIAL EQUIPMENT AND TUNING INSTRUCTIONS. - ENGINE.

To enable the engine performance to be increased a kit has been produced. This kit was fitted to the Austin-Healey cars that completed the Le Mans 24 hour race in 1953.

LE MANS ENGINE MODIFICATION KIT, PART NO. P.280.

AUSTIN PART NO.	DESCRIPTION.	NUMBER OFF.
1B.2814.	Valve Spring (Outer)	8
1B.2813	Valve Spring (Inner)	8
1B.2811	Valve Spring Cup (Upper)	8
1B.2812	Valve Spring Seat (Lower)	8
AUC.9004	1¾" Carburetter (Front)	1
AUC.9005	1¾" Carburetter (Rear)	1
1B.2893	Aluminium Carburetter Manifold (Front)	1
1B.2894	Aluminium Carburetter Manifold (Rear)	1
7H.1733	Carburetter Stud	8
7H.1734	Carburetter Gasket	2
6K.9688	Nut	8
LWN.205	Spring Washer	8
7H.1724	Carburetter Cold Air Box	1
7H.1725	Carburetter Air Tube	1
2H.979	Strip and Buckle Clip	1
17H.5247	Grommet	2
2K.8479	Set Bolt	4
2K.8606	Shakeproof Washer	4
1B.2892	High Lift Camshaft	1
1B.1219	Tab Washer	1
7H.1726	Steel Face Cylinder Head Gasket	1
7H.1727	Distributor - Special Advance Curve	1
1B.2751	Valve Guide Shroud and Oil Retainer	8
7H.1728	Near Side Bonnet Frame Support	1
2H.731	Lock Washer for Starting Nut	1

The Le Mans Engine Modification Kit enables the horse power output of the engine to be increased from 90 B.H.P. at 4,000 R.P.M. to 110 B.H.P. at 4,500.

The effect on performance is marked, and results in improved acceleration and speed. The low speed performance of the engine is not impaired.

Maximum performance will only be achieved by correct and careful fitting of the Kit, and the following installation instructions should be closely followed.

FITTING INSTRUCTIONS.

Drain off cooling water and remove the bonnet, radiator, radiator hoses, cylinder head, carburetters, and manifolds. Drain off engine oil and withdraw oil reservoir, oil pump, and distributor. Remove engine mounting bolts (4 at each mounting), detach tappet cover, and withdraw the tappets.

Extract the crankshaft pulley, take off the timing case cover, remove camshaft gear and chain, and withdraw the camshaft itself. Next, strip the cylinder head and carefully smooth off any roughness within the combustion chambers and ports.

Match and fit the inlet and exhaust manifolds and carburetters to ensure that no steps exist at the joints. It is important that the carburetters are carefully aligned so that the spindles are in line and the mechanism returns freely to its stops. The valves should be lightly ground in until perfect seatings are obtained. Fit the special camshaft, chain and gear, ensuring that the valve timing markings are correctly lined up. Refit the distributor with the timing set at 9° B.T.D.C.

.

Rebuild the engine and set the tappets to 015". Refill the radiator and oil reservoir, and when the engine has warmed up, re-tighten the cylinder head nuts and check the engine and cooling system generally for leakages. Cylinder Head should be tightened to 65/70 lbs.

A road test is now essential for final adjustment and it is recommended that the most satisfactory ignition setting is arrived at by timing top gear acceleration against a stop watch.

Under no circumstances should any attempt be made to raise the compression ratio by machining the cylinder head.

.....

100 THREADS

The parts of the 100 that Donald Healey designed were all UNF because this thread by that date had become the British standard. However Austin designed parts, going back in a few cases to before W.W.II, were BSF.

Therefore the engine BN1 gearbox, spiral bevel rear axle, suspension and hubs etc. were BSF.

All chassis parts including such things as the grease nipples were UNF

When BMC introduced onto the 100 the Hypoid rear axle, the BN2 gearbox, the BN2 front suspension and hubs they had UNF threads, these major units having been designed for the A90 Westminster after W.W.II.

If one uses this simple guide it will hold good for about 99% of all cases.

It is also worth noting that some early Austin parts have B.A. threads. These were replaced later with 10-32 UNC threads.

JOHN HARPER'S ARTICLES
No 5
A70 and 2.2 Litre Engines

Simon Tyrrell's article on page 43 of the August 1990 Rev Counter has raised some interesting questions which will no doubt provoke many readers to put pen to paper and send in their contributions to Rev Counter. In anticipation of this I have produced my own input whilst the subject is "topical".

My first comment on Simon's article is that it is not just the A70 engine, which is worth considering, but the whole four-cylinder petrol range from the Austin 16 right through to the 2.2 litre used in taxis and commercial vehicles. It is also well worth including the 2. 5 litre which was the last application of our family of engines used in the rather mundane EA van (engine type 25U). This variant was mounted 'under floor' tilted over on its left (manifold) side by 55 degrees.

There were many changes to the later engines, the major one being the crankshaft, which had a completely different flywheel flange with a conventional oil seal. The main difference in the cylinder block, other than the bore size, between these engines and the type used on the 100 was the lack of the tachometer drive assembly. I know of an A90 Atlantic fitted with an A70 engine, which has got around this problem by using an electronic, positive earth rev counter fitted into the mechanical case so as to blend with the rest of the instruments.

I personally doubt whether there is enough metal in the 2.2 litre cylinder wall to bore it out much past the maximum .060 inch oversize. To make the bore the same as a standard 100 would equate to an oversize of .3125 inches, over five times the recommended maximum! I have tried to measure the wall thickness on both engines with the core plugs removed. Although this is difficult to measure accurately the wall thicknesses do seem to be about the same. I for one would not risk going much beyond the maximum recommendation. One might, however, just get away with boring a 2.5 litre block out to 2.6 litre standard size but no more because this is now .0975 inch oversize. The height of the 100 pistons will need to be checked in the 2.5 litre block.

I doubt whether it is worth the risk in effort and expense of trying to fit a sleeve into a cracked block.

The question of using Rover V8 pistons has come up before but I have not been able to trace the source of the suggestion. Some initial, investigations have shown that the diameter is .61 inch larger than the 100 against the maximum recommended oversize of .040 inches. It in shorter and will not reach the top of the bore by about one eighth of an inch. The bowl is a slightly different shape and detailed calculations are needed to see whether a satisfactory compression ratio can be achieved and whether the high compression ones used in the V8 saloons or the low compression used in 'the Range Rover are the best. There are only three rings on the Rover piston against 4 or 5 on the 100 and the gudgeon pin in slightly different.

JOHN HARPER'S ARTICLES
No 5

Again a personal view, I would not fit valve inserts purely for running "lead free'.
The 100 head is particularly prone to cracking across the valve seats and good cylinder heads are in short supply. The extra pressure created by a tightly fitted seat is likely to increase the risk of cracking and the insert could become loose and cause major damage. If a seat is badly worn then an insert may be the only answer, but I would recommend "cutting back" the seat if at all possible before resorting to this.
I have two friends who have run their cars with an unmodified A70 head. The Only thing to watch is that a later WA-XSTAT type of thermostat with a small diameter bulb is used. The larger bellows type will not always go in because it is fitted in a housing mounted on top) of the head on an A70.

One of these cars per forms well against other 100's on the track. The owner of the other has managed to obtain a correct head, which is now fitted. The change that he noticed was not to the performance as one might expect, but in the smoothness of running. It is not necessary to skim anything off the head as the compression ratio with the A70 head is reasonable at approximately 8: 1 against the standard 7,5: 1. In Geoffrey Healey's book, AUSTIN HEALEY he describes on PAGE 232 an experiment made with an A70 engine which was dropped because it was more fussy and “not liked". Perhaps we have experienced something similar here!

The push rods that Simon refers to are almost: certainly the hydraulic versions fitted co the early Austin 16. 1 drove one of these for about four years and after the initial rattle when cold they made for a very quiet engine. They worked by allowing the oil pressure in the rocker shaft and rockers to enter the push rod through an oil way drilled through the centre of the push rod top cup. This filled the push rod with oil and made it 'solid". The slight oil leakage allowed the push rod to shorten slowly as the components changed temperature. They were replaced I believe on cost grounds and occasional failure due to blockage caused by dirty oil. As an interesting experiment this type of push rod could be fitted to a 100 if they were shortened to match the later valve gear. The engine would run quieter and tappet adjustment would be eliminated.

JOHN HARPER'S ARTICLES
No 5

In conclusion Simon is right to point out that there are many useful parts to be obtained from 2.2 litre engines, but these need to be checked carefully before use because of all the minor changes and improvements that took place.

Fan Belt & Dynamo Pulley Size

The length of the fan belt is fairly critical as at one extreme the dynamo is up tight against the cylinder block and at the other the dynamo fan could cut into the top hose particularly if this is fitted a bit too low.

One problem sometimes Met is that a slightly larger pulley has been fitted from an Austin A70 or early A90. This in itself will not cause a problem but a slightly longer belt may be needed.

The two pulley sizes are 3 5/8' and 4 1/8" inches diameter. The larger one has two holes for a special puller. The smaller, correct one has to be pulled on the flange and can easily be broken, as it is a brittle casting.

The original BMC part number for the belt: is 2H 4238, but the most readily obtainable and best fit replacement is the Ferodo V150 with the following dimensions:

Outside Circumference 47.4 inches,
Inside Circumference 47.3 inches
Top Width 0.75
Thickness 0.5
Angle 32 degrees inclusive

A near equivalent, and sometimes recommended alternative, is the Ferodo V104 with an O.C. of 46.1”. This is rather tight: and may need the dynamo to be partly removed to fit it.

Other equivalents are; Mintex TK 474 or Romac C738

But I recommend checking these for size before attempting to fit.

DISCLAIMER: Whilst every effort is made to check the information incorporated in this series, no responsibility can be accepted for errors. However, corrections, improvements, suggestions & additional information will be very welcome (in writing please).

 To contact the author please write to him at: 7 Cedar Avenue, Ickleford, Hitchin, Herts. SG5 3XU. or Telephone 0462-51970.

A70 HEAD

The A70 head is narrower than the Healey one and has to be built up with weld to cover the water passages in the block adjoining each cylinder.

Mine was built up with a MIG Welder by John Dowsett (a NSW Club Member) who runs Classic Connections at Riverstone a restoration business specialising in Austin Healeys.

I cleaned up the welds on the sides to make them look nice and had the head surface ground to get the new welded sections level with the rest of the face of the head. I then extended the water passages in the head to line up with those in the block and gasket. It's not an easy job but a lot cheaper than an alloy head.

The combustion chambers are smaller because of the A70's 2.2 litre capacity, this raises the compression ratio. I don't know what this ratio is now, but I have to use 98 octane petrol to stop running on.

At No 4 cylinder a crack developed and I had it fixed by MG Metalock a company at Bankstown, who drill holes along the crack and fit threaded plugs (no welding). No 2 Cylinder has now got a similar crack (you can see the rust in the 3rd picture) and I will soon have to get that fixed.

The modified A70 head has now done abt 50,000 miles and the repair was done abt 30,000 miles ago when the engine was rebuilt, hardened exhaust valve seats and Chev valves fitted for unleaded petrol.

Don Hardie 09 03 2009

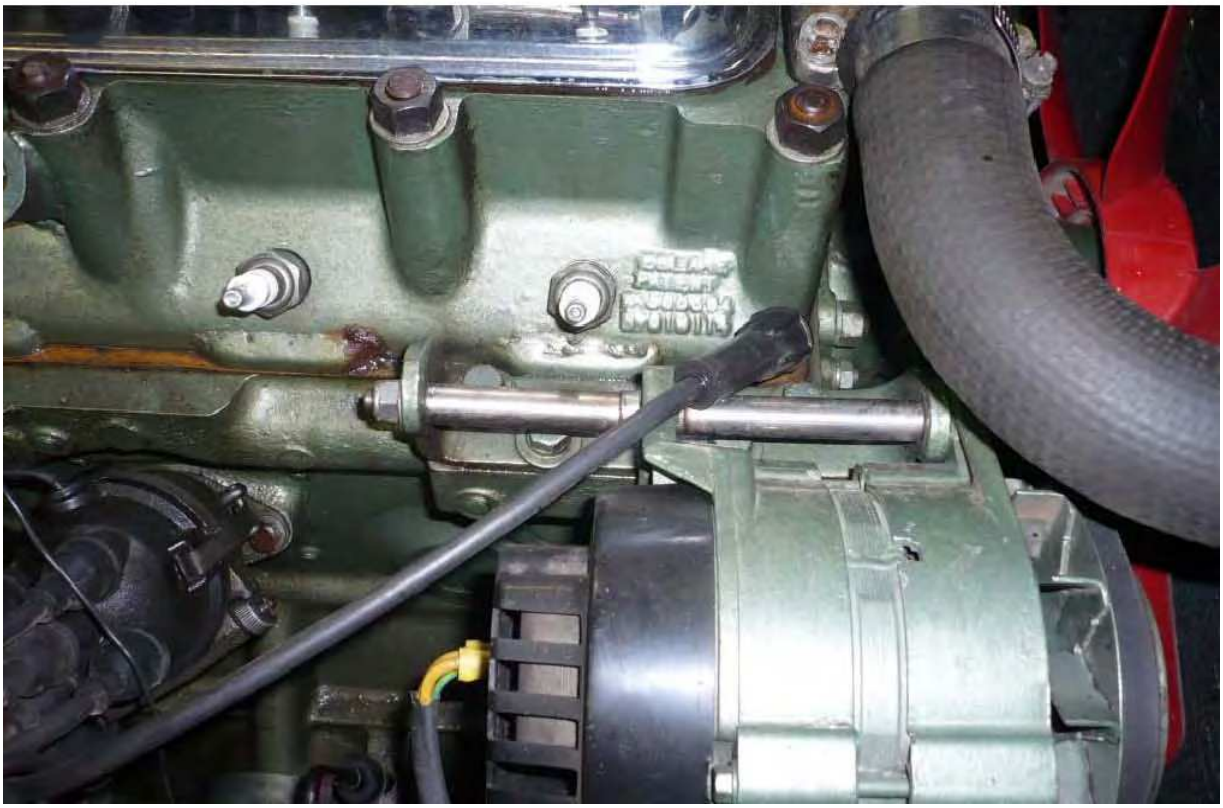

After 14 ½ years and 58,509 miles after the welding, the second was repaired by Metalock Australia at Ingleburn, the pictures below shows how. (D.H. 31/10/2009)

First crack repaired 1999

Second crack repaired 2009

You can see how the water holes had to be extended to match up with the Head Gasket, which would have a source of a leak, as the original Healey head was prone to leaking at these points with full coverage out to the edge of the gasket.

ALFIN REAR BRAKE DRUMS

When I bought the Healey in1987, it had Alfin rear drums with cross fins, after an accident in 2012 the only Alfin drums that were available had radial fins. Someday I'll put one of these on the right side.

Don Hardie

Right hand cross fins

Left hand radial fins.

Brake Fluids

I was getting myself in a muddle over brake fluid just now so I made myself some notes. As I suppose some of you may be as susceptible to muddle as me, I offer them up here:-

1) All brake fluid is "synthetic"…it's not a "natural" product.
2) Most synthetic fluids are NOT silicone. They are polyethylene glycol ether based.
3) DOT 3 & 4, which can be mixed, are not silicone. They are glycol.
4) DOT 5, which cannot be mixed with 3 or 4, is silicone. Can't be mixed with anything!
5) DOT 5.1 is glycol based and cannot be mixed with DOT 5.
6) DOT 5.1 can be mixed with DOT 3 or 4, as both are glycol based.

The word "synthetic" began to appear when manufacturers worked out that it made regular brake fluid sound more special ie they could charge us more money for the same old stuff.

DOT stands for **D**ept. **O**f **T**ransport and relates to the fluids' boiling points. If a car brakes at high speed, the brakes get hot. Some heat is carried away from the brakes by the brake fluid. Bad news if the fluid boils! The faster you're going, the higher DOT you need. Higher DOT numbers indicate higher boiling points for "Dry" fluid (has not absorbed any water) and "Wet" fluids (has absorbed water). ie, the wetter it is, the more problematic it becomes. Mixing 3 with 4 lowers the boiling points and vice verca.

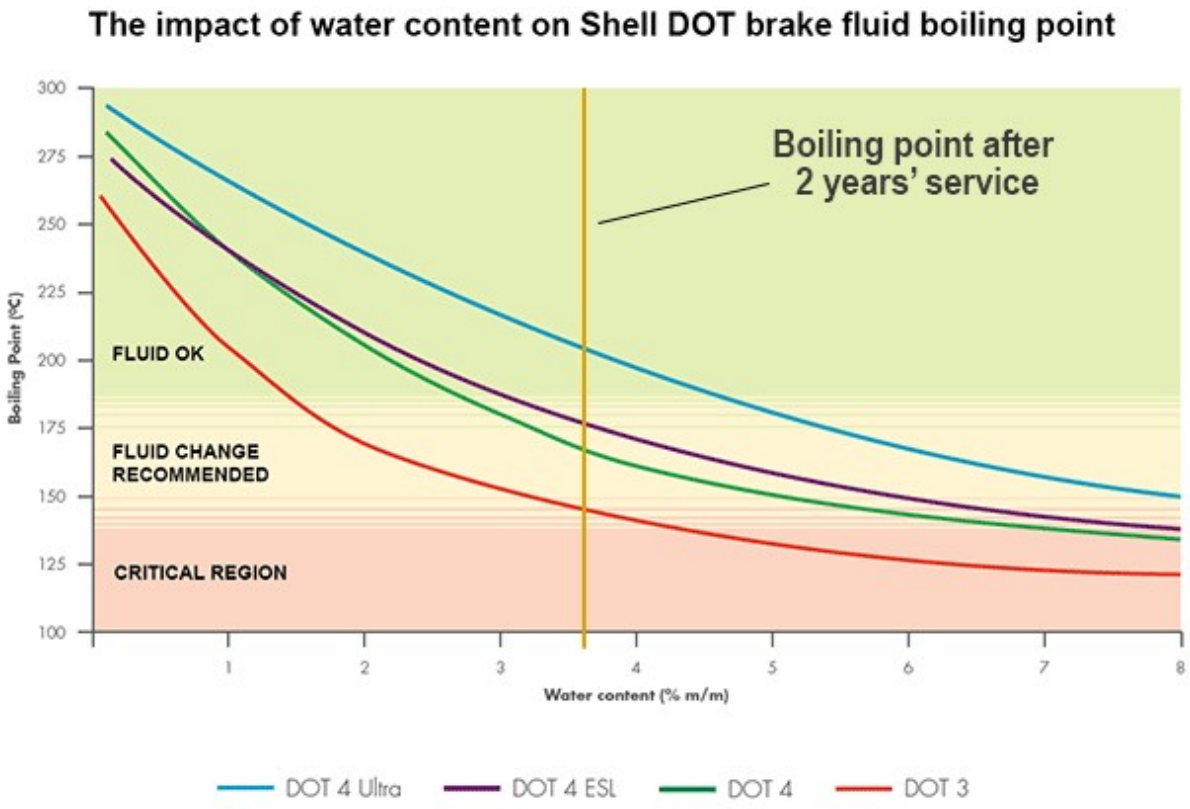

Some purists suggest changing fluid every 18 months to 2 years. I've never done that, thinking that moisture and dirt are the main worries. If you keep dirt out of the system and your car out of water ie keep the reservoir cap on tight and don't top up with old fluid….if, if, if….you should be OK. Personally, I go by the colour of the fluid. If it looks OK, it probably is. If it's going cloudy, it probably isn't. An important topic..if in doubt, do your own research!

Simon Lachlan Feb '18.

REAL HEALEY NATTER
FITTING A LUCAS 18ACR ALTERNATOR

Back in 1996 I returned from the South Coast via the Princes Highway after dark. As all know Lucas (The Prince of Darkness) headlights are not their best on dark country roads. When I joined the Hardie Household I was presented with a pair of Cibe Quartz headlight units fitted with 120/80-watt globes and powered through a twin relay. Things were a lot brighter but this resulted in the ammeter showing a discharge when the drain of those two 120 watt high beams was combined with tail lights, dash lights, ignition, fuel pump and some times windscreen wipers and heater. This meant that the 22amp generator had reached its maximum charge rate, thus couldn't keep the system voltage up to scratch resulting in the lights not running to their full potential. Neil Dunn had mentioned to Barry Campbell, some time ago, that running the generator at full charge for extended periods could result in it throwing the solder out of the commutator joints, so after many years of procrastination, I insisted on an alternator being fitted.

First change the electrical system to NEGATIVE EARTH if it is still Positive to Earth. See relevant article.

The fitting a narrow fan belt had already been done (see relevant article) and a 45amp Lucas 18ACR, with built in regulator, was purchased from my friendly Wrecker (sorry - Auto Parts Recycler) and painted engine green. The stiffener strip welded across the generator bracket had to be removed, but with less strain and vibration from the narrow belt it is figured that this should be ok, but it will be closely watched for any problem. The alternator was secured to the bracket by a 7 1/2" length of 5/16" threaded rod and two pieces of 5/16" ID stainless steel tube of suitable length. The original adjusting linkage was used and with the fan belt fitted and everything tightened, SURPRISE, the pulleys lined up exactly.

If you still have a wide fan belt, you could part the narrow alternator pulley in a lathe between the "Vs" and space the pieces out with washers to suite the wide belt. If there is insufficient thread left to use the nut and washer, leave the washer out and fit the nut with Loctite. I have seen an alternator with the pulley made up of two pressed steel halves, you would only have to space them out with washers, no machining.

Another way is to weld a piece of steel onto the generator bracket as shown below.

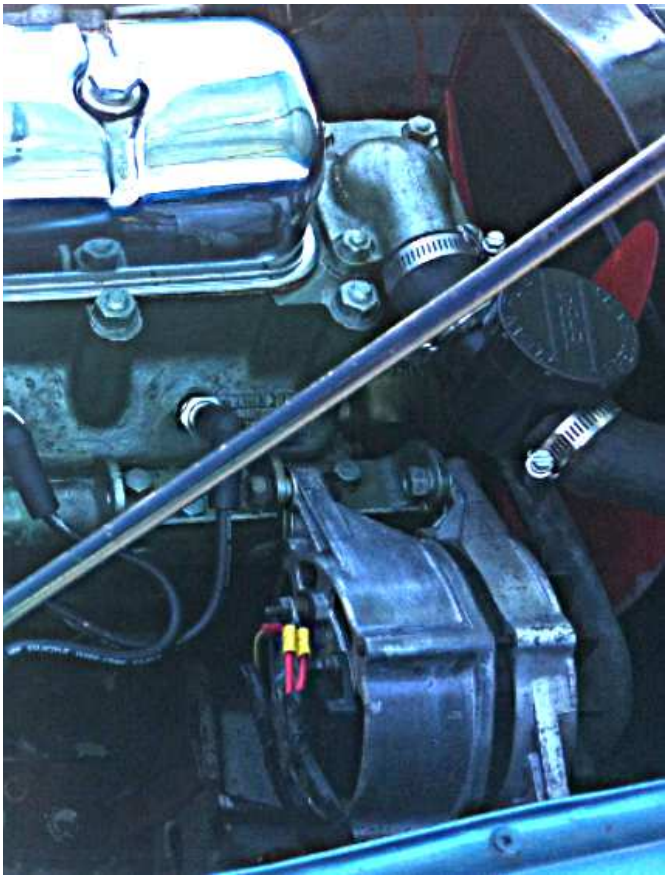

THE WIRING WAS UPDATED 28/06/2010

The way I first wired up the alternator in 1996 was rather clumsy so I changed it. The existing generator wires are now connected to the alternator, the yellow to one of the large spade terminals and the yellow/green to the small lower spade terminal, I connected another wire from the other large spade terminal to the headlight relays mounted on the right hand inner guard. The relays originally had a wire up to the regulator, and I left it connected, so there are now two wires supplying current to the regulator, which is now only used as a junction box.

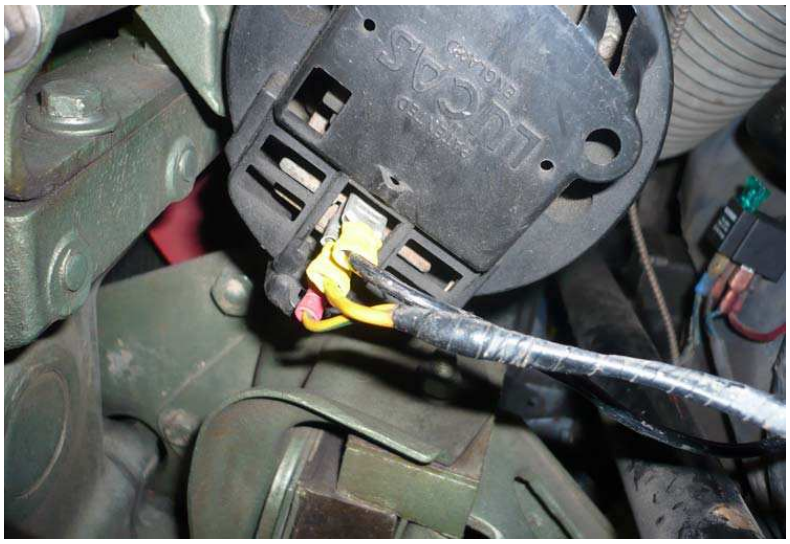

There was an old regulator in the “precious spares” bin, so all its innards were removed leaving the copper and steel strips underneath intact and two pieces of 20 amp wire stripped of their insulation were soldered across them all, except the earth terminal (the one on the right of the photo below).

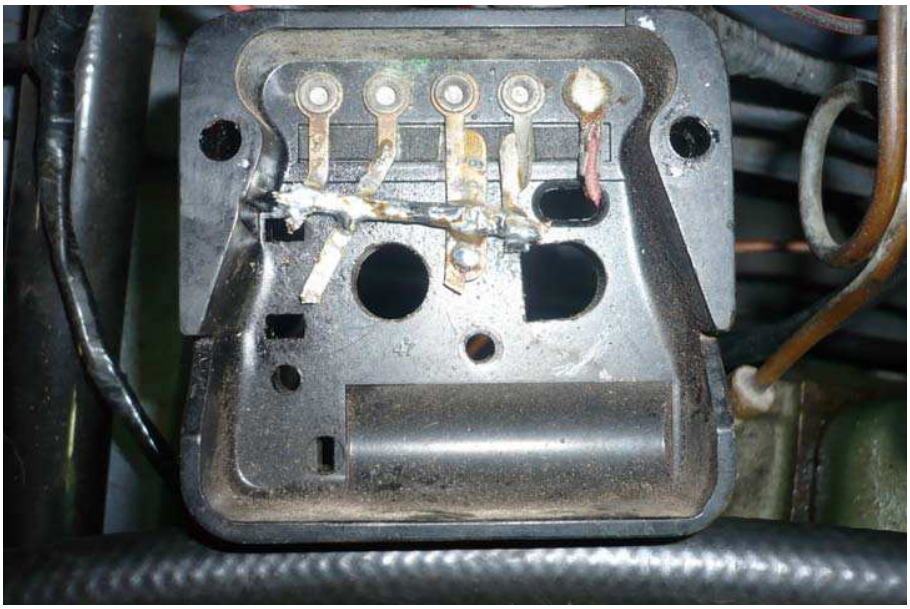

This was then mounted in place of the original and all the wires connected to the four left hand terminals, except the yellow/green and small yellow (the ignition light wires), which were both connected to the right hand one (the old earth one).

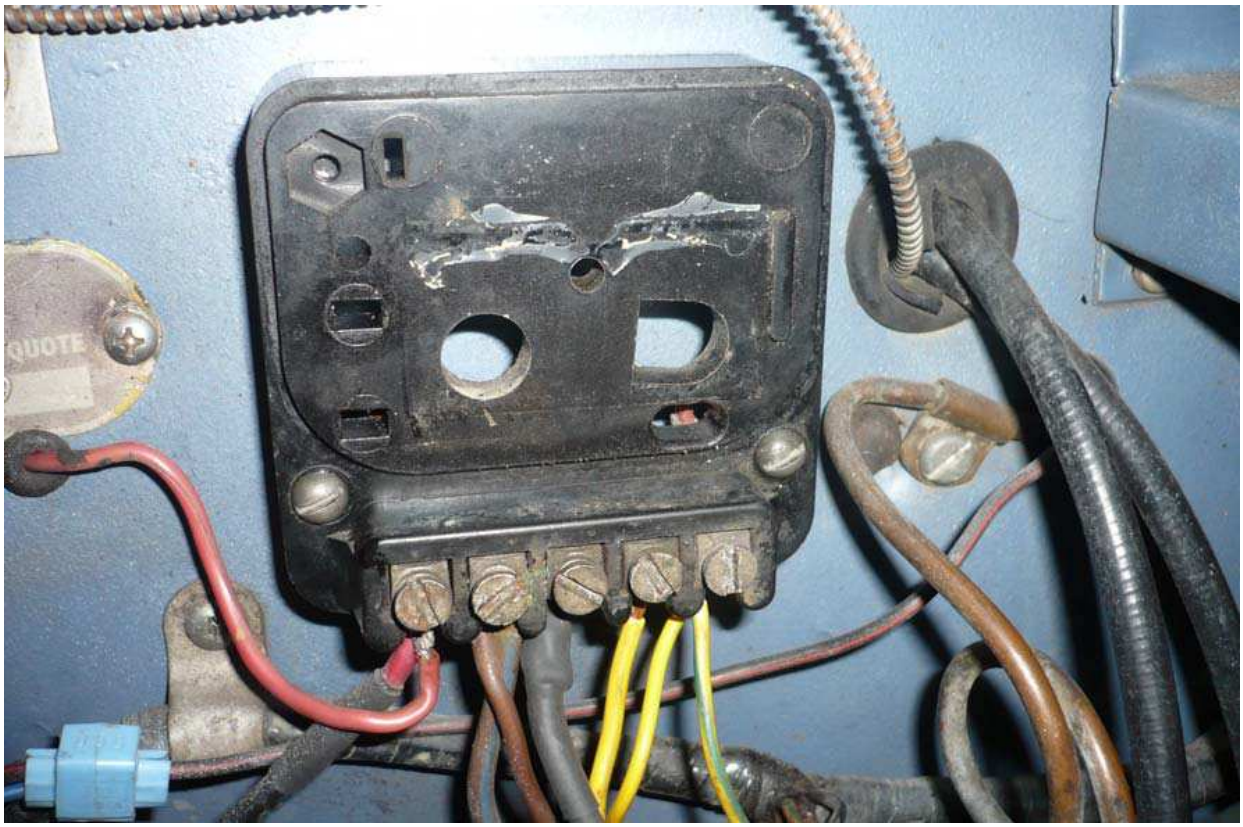

From above the regulator box is still there and the changes in the wiring are hard to see.

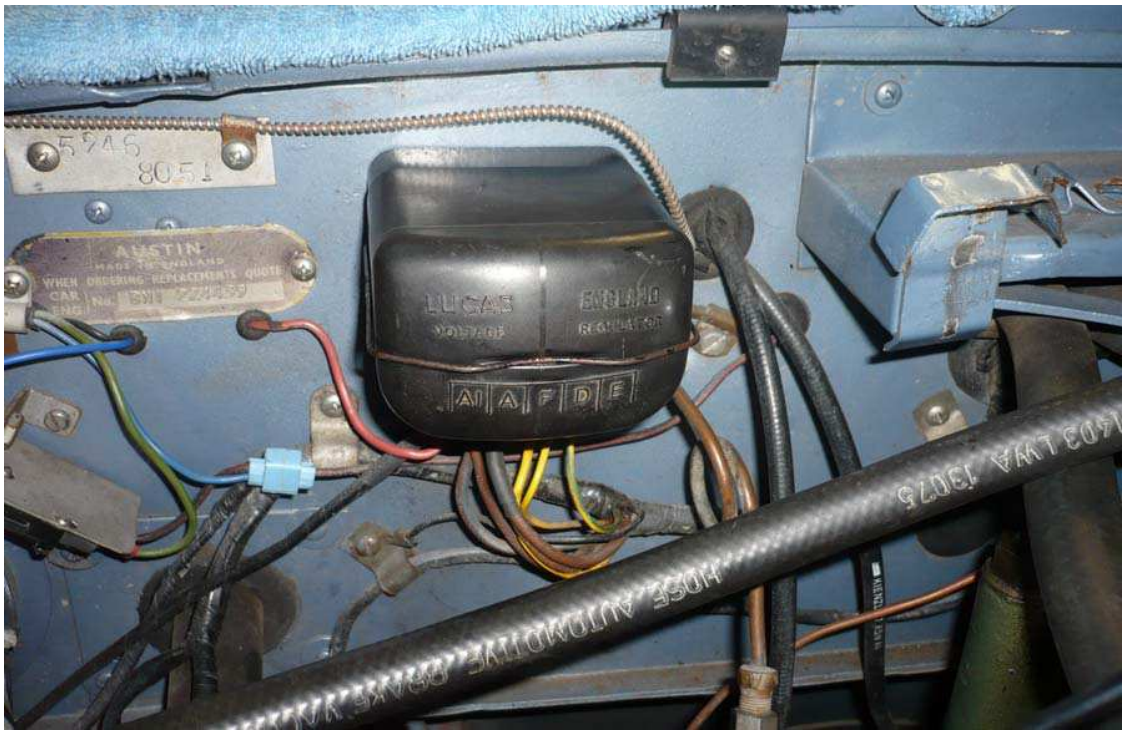

USING THE REGULATOR WITHOUT MODIFICATION

By removing the earth, joining the thin yellow and yellow/green together,and bridging A and A1,the innards of the regulator are no longer used as they are no longer needed, because the alternator has a built in regulator.

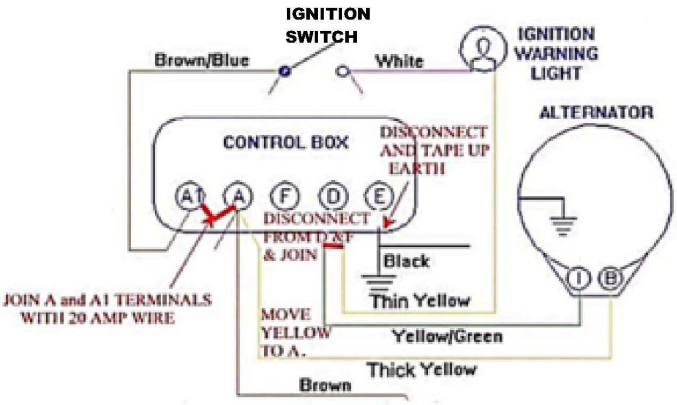

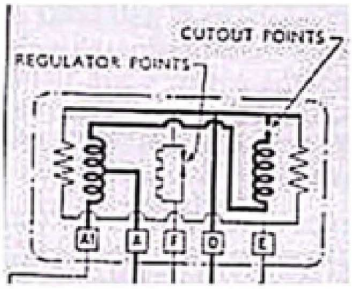

Another way of doing it, the wires are joined with electrical connectors, wrapped in electrical tape and secured with plastic ties.

From above the regulator box is still there and the changes in the wiring are hard to see.

WIDE BELT ALTERNATOR

In a discussion with Brad Robinson about fitting an alternator where the wide fan belt is still fitted, he mentioned that he had seen an alternator with a split pulley (i.e.- the pulley is made in two parts) and by spacing the parts apart with washers, it can be made to fit a 100's wide fan belt. I don't know if he pursued this, but what follows is how I have done it since.

ALTERNATOR

These come in many different types so we will concentrate on Bosch ones, make sure the one you get is the split pulley type i.e. the pulley is made up of two identical steel pressings NOT the cast iron type.

If you can't get the split type pulley you can part the cast iron pulley, in the centre of the "V" on a lathe, into two pieces, space out the outer pulley side to fit the wide belt, if you can't refit the spring washer use 'Loctite'. This can also be done with a Lucas alternator pulley.

It might also be an idea to check the carbon brushes in the regulator (new ones can be purchased from most Auto Electricians) and fit new bearings as the load of the wide belt could be greater than that of the narrow one.

Mounting and adjusting lugs are of a couple of different types the front views are shown below –

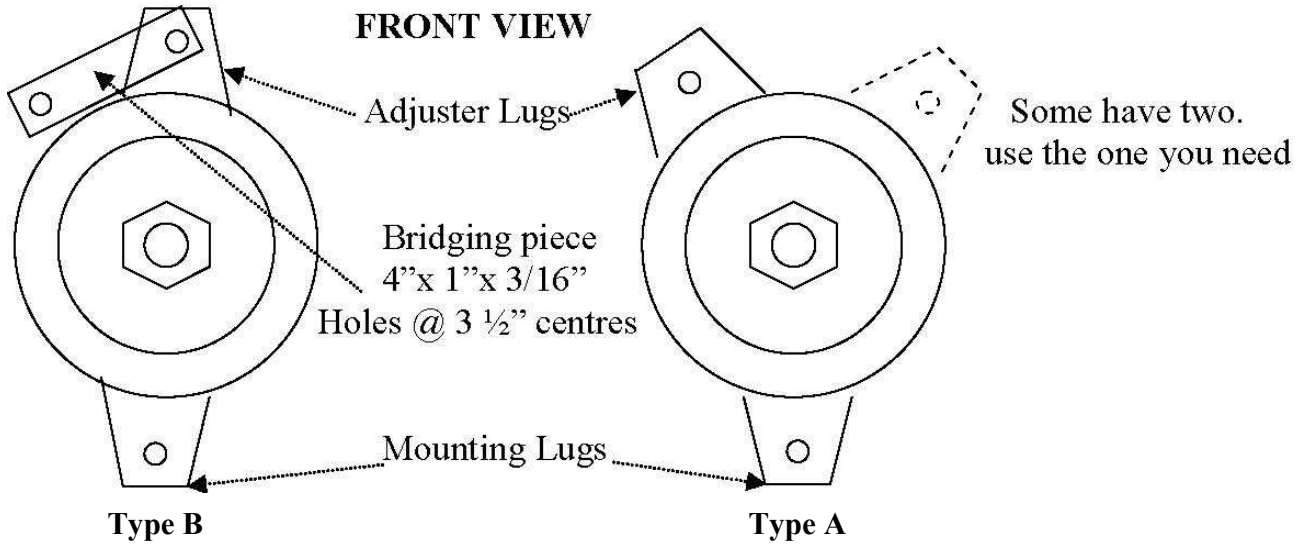

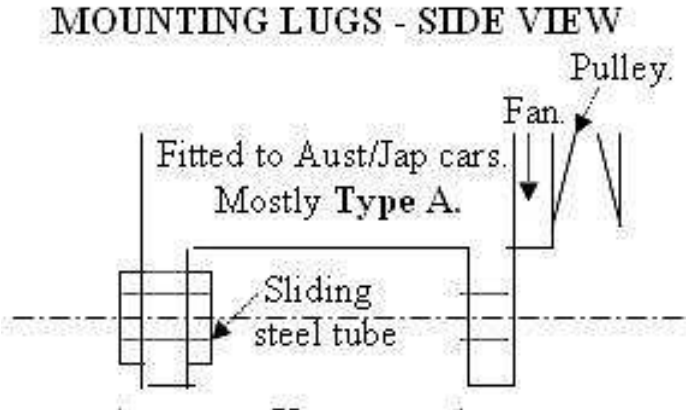

CHANGES TO EXISTING GENERATOR BRACKET

Remove the stiffener strip welded across the generator bracket. Secure the alternator to the bracket by a 7 1/2" length of 5/16" threaded rod and two pieces of 5/16" ID stainless steel tube of suitable length.

Another way is to weld a piece of steel to the generator bracket as shown below.

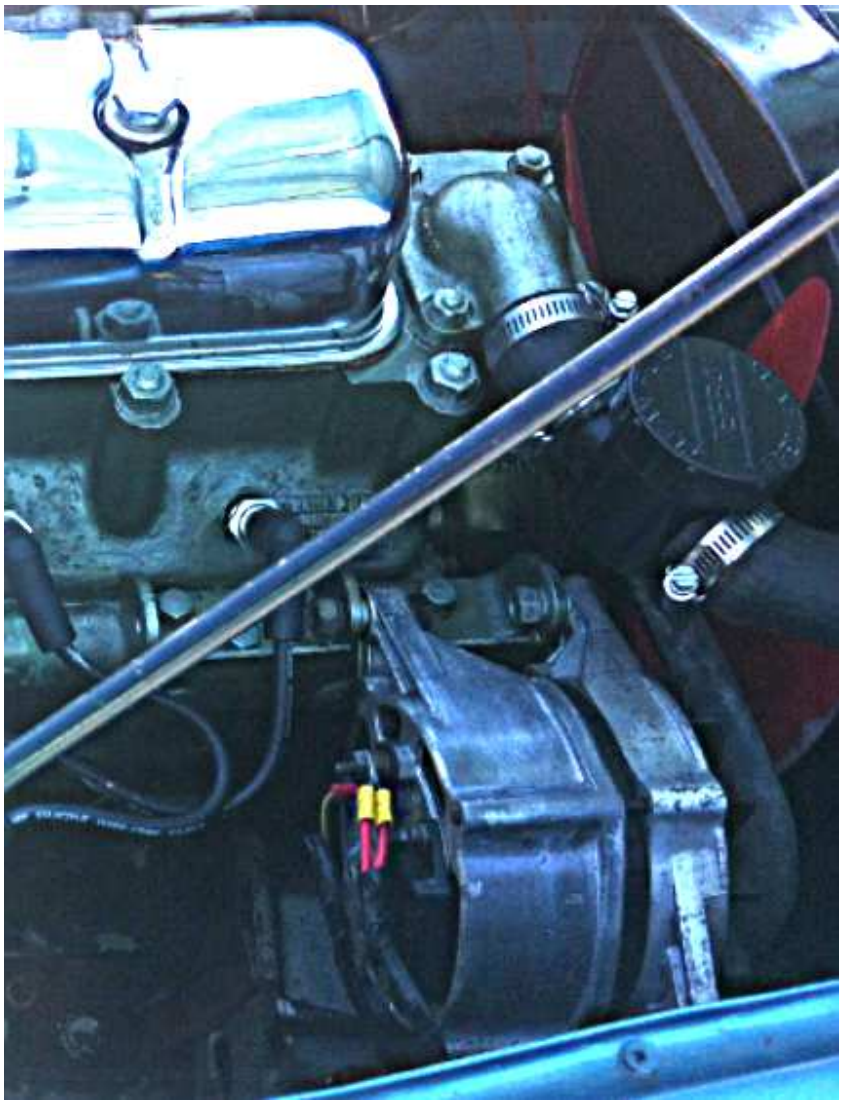

For wiring see the article “ALTERNATOR – FITTING”, the Bosch alternators have a spade terminal to fit the yellow/green wire to and a threaded terminal with a nut for the yellow wire.

ALTERNATOR MODELS 15ACR, 16ACR & 17ACR

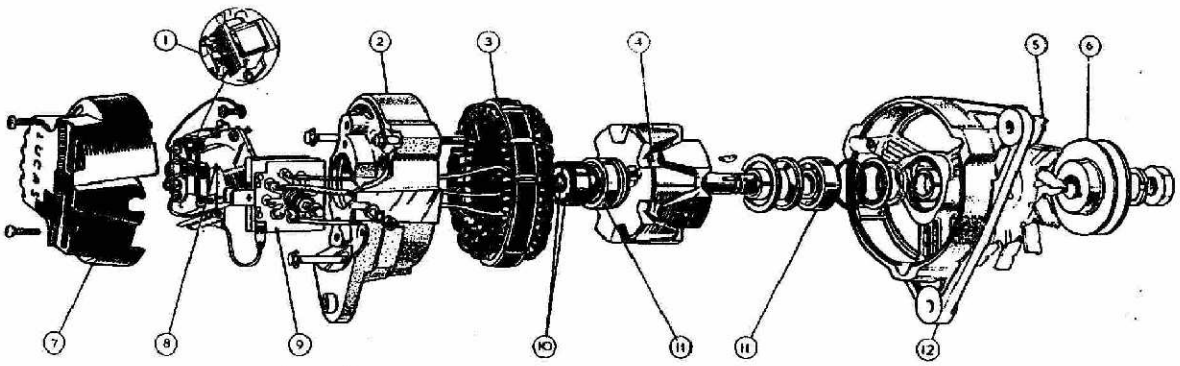

Fig. 1 Alternator Models 15ACR, 16ACR and 17ACR, dismantled

1 Built-in output regulator in heat sink
2 Slip ring end bracket
3 Stator
4 12-pole rotor and field winding assembly
5 Fan
6 Pulley
7 Cover
8 Brushgear and regulator assembly
9 Rectifier pack
10 Slip rings
11 Ball race bearings
12 Drive end bracket

1. DESCRIPTION

These alternators are similar in mechanical construction, 15ACR and 16ACR being dimensionally alike while 17ACR is some ¼" (6.3 mm) longer overall. Differences in the number of turns and the wire gauge on the respective stator windings result in alternative electrical performance characteristics (Fig. 3).

The construction is shown in Fig. 1. The laminated stator carries a 3-phase star-connected output winding. A 12-pole rotor carries the field winding, the rotor shaft running in ball race bearings in die-cast end brackets.

Rectification of alternator output is achieved by six silicon diodes housed in a rectifier pack and connected as a 3-phase full-wave bridge circuit. The rectifier pack is attached to the outer face of the slip-ring end bracket, and contains also three 'field' diodes. At normal operating speeds a small portion of the stator winding current flows through these diodes to provide rectified self-exciting field current. This circuit is taken, via a loop-in cable in the three-way portion of the two-piece terminal connector, to the two brushes which pass current to the field winding by way of face type slip-rings. The latter are carried on a small diameter moulded drum attached to the rotor shaft outboard of the slip-ring end bearing.

A voltage regulator of micro-circuit construction is incorporated on the slip-ring end casting.

System voltage is sensed directly by a permanent connection between the regulator and battery via alternator terminal B+. The battery current drain resulting from this continuous connection is negligible.

Electrical connections to external circuits are brought out to 'Lucar' connector blades, grouped in a manner suitable to accept a two-piece non-reversible moulded connector socket.

Warning Light

The additional 'field' diodes enable a simple charge-indicator warning light to be used (Fig. 2). When the ignition is switched on, the warning light is connected to the battery, the circuit being completed by way of the alternator field winding and the regulator. The bulb is then lit fully. This small current, flowing in the field winding, sets up a flux which supplements the residual flux in the rotor and aids the initial build-up of stator voltage as the rotor begins to rotate when the engine is started.

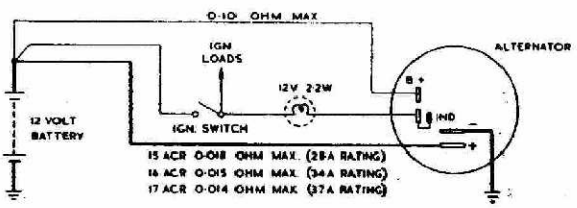

Fig. 2 The charging circuit

As rotor speed and generated voltage increase, the field current supplied by the stator winding through the 'field' diodes increases correspondingly until the alternator becomes fully self-excited. During the rise in stator generated voltage (reflected at terminal IND) the brilliance of the warning light is gradually reduced. At approximately the speed at which the alternator commences to charge, the voltage at the IND terminal equals that at the battery side of the warning light, and the latter is extinguished. Thus, illumination of the warning light under normal running conditions indicates that the alternator is not functioning correctly.

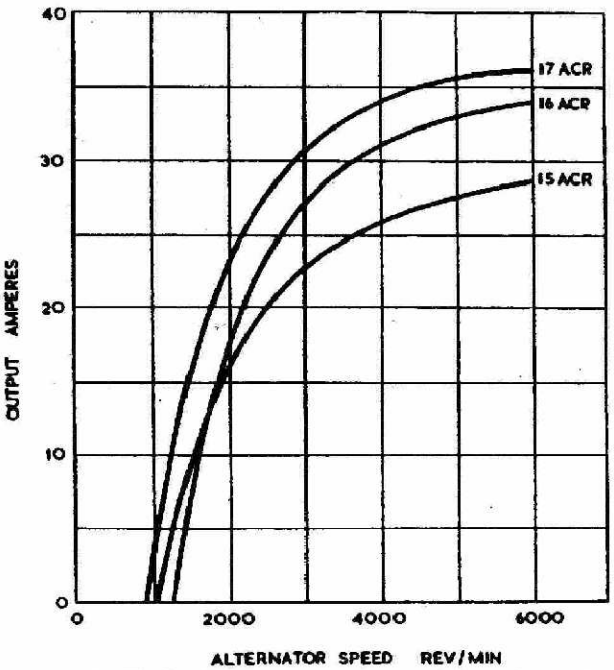

Fig. 3 Typical performance curve (alternator hot)

2. ROUTINE MAINTENANCE

(a) Cleaning

Wipe away any dirt or oil which may have collected around the apertures in the slip-ring end bracket and moulded cover.

(b) Belt Adjustment

Occasionally inspect the driving belt for condition and tension. Refer to the vehicle manufacturer's handbook for the correct method of adjusting belt tension.

IMPORTANT. To avoid bearing damage when adjusting belt tension, apply leverage only on the alternator drive end bracket, not on any other part of the alternator. The lever should be of a soft material, preferably wood.

(c) Lubrication

The bearings are packed with grease during assembly and will normally require no further lubrication during their service life.

(d) Circuit Connections

Care must be taken when connecting the battery, either on the vehicle or in a test circuit, to observe correct polarity matching.

The alternator must only be run either with all charging circuit cables (including the battery) properly connected, or with the two-part connector removed from the alternator terminals.

CAUTION. If electric arc welding is being carried out on any part of the vehicle, the connectors should be removed from the alternator to obviate the slight risk of damage to semiconductor devices.

3. TECHNICAL DATA

Earth polarity of system:	Negative only	
Nominal voltage:	12	
Nominal d.c. output (hot), at 14.0V and 6,000 rev/min.:	28 amp.	15ACR
	34 amp.	16ACR
	36 amp.	17ACR
Max. permissible rotor speed:	12,500 rev/min.	
Stator phases:	3	
Stator winding connection:	Star	
Number of rotor poles:	12	
Resistance of rotor winding in ohms at 20°C:	4.33 ±5% (15ACR, 16ACR)	
	4.165 ±5% (17ACR)	
Brush spring tension:	9–13 oz (255–368 g) with brush face flush with brush-box housing	

4. SERVICING

(a) Testing the Alternator in Position

First check the driving belt for condition and tension.

The nominal hot ratings are given in para. 3. These figures may be exceeded slightly when the

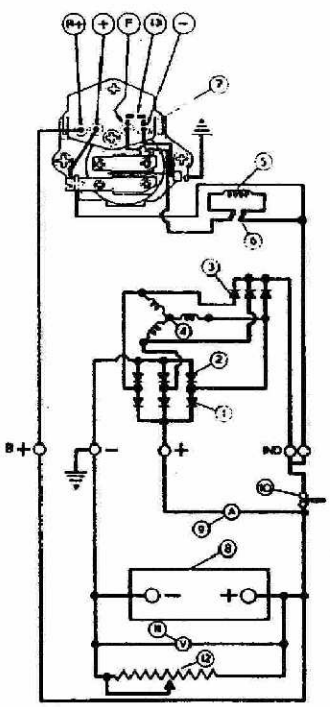

1 Live side output diodes (3)
2 Earth side output diodes (3)
3 Field feed diodes (3)
4 Stator winding
5 Field winding
6 Slip-rings
7 Voltage regulator
8 12-volt battery
9 0–40 or 0–60 ammeter
10 12-volt 2.2-watt bulb
11 0–20 voltmeter
12 0–15 Ω 35-amp variable resistor
13 --- Link bridging regulator terminals 'F' and '—'

Fig. 4 Alternator output test circuit

alternator is running cold. To avoid misleading results, the following test procedure should therefore be carried out with the alternator running as near to its normal operating temperature as possible.

Alternator Output Test with Regulator Inoperative

Withdraw the two-part connector from the alternator, remove the moulded cover (secured by two screws) and link together regulator terminals 'F' and '—'.

Connect an external test circuit as shown in Fig. 4.

Observe carefully the polarity of battery and alternator terminals — reversed connections will damage the alternator diodes.

The variable resistor across the battery terminals must not be left connected for longer than is necessary to carry out the following test.

Start the engine. At 1,500 alternator rev/min, the test circuit bulb should be extinguished. Increase engine speed until the alternator is running at 6,000 rev/min approximately, and adjust the variable resistance until the voltmeter reads 14.0 volts. The ammeter reading should then be approximately equal to the rated output (para. 3). Any appreciable deviation from this figure will necessitate the alternator being removed from the engine for further examination (para. 4b).

Failure of one or more of the diodes will be indicated in the above test by the effect on alternator output, and also in some instances by abnormally high alternator temperature and noise level. The table shows how diode failure will influence test results, and para. 4(g) gives information on testing the diodes.

Regulator Test

The following test assumes the alternator to have been tested and found satisfactory.

Disconnect the variable resistor and remove the link bridging regulator terminals 'F' and '—'.

With the remainder of the test circuit connected as for the alternator output test start the engine and again run the alternator up to 6,000 rev/min until the ammeter shows an output current of less than 10 amperes. The voltmeter should then give a reading of 14.0–14.4 volts. Any appreciable deviation from this (regulating) voltage means that the regulator is not functioning correctly and must be replaced.

SYMPTOMS

Warning Light	Alternator: Temperature	Alternator: Noise	Output	Probable Fault and Associated Damage
Normal at stand-still, goes out at cut-in speed but then glows progressively brighter as speed increases.	High	Normal	Higher than normal at 6,000 rev/min. 15ACR 35 amp approx. 16ACR 40 amp approx. 17ACR 38 amp approx.	Live side output diode open-circuit. (May damage rotor winding and reg: output stage, overheat brushboxes and blow warning light.)
Light out under all conditions.	High	Excessive	Very low at 6,000 rev/-min. 10 amp approx.	Live side output diode short-circuit. (May cause failure of associated 'field' diode).
Normal at stand-still, dims appreciably at cut-in and gets progressively dimmer or may even extinguish at higher speeds.	Normal	Excessive	Poor at low speed. Slightly below normal at 6,000 rev/min. 15ACR 26 amp approx. 16ACR 32 amp approx. 17ACR 30 amp approx.	Earth side output diode open-circuit.
Normal at stand-still, dims at cut-in, remains dim or may extinguish at (much) higher speeds.	Normal	Excessive	Very low at all speeds above cut-in. 7 amp approx.	Earth side output diode short circuit. (The same symptoms would be apparent if one phase winding was shorted to earth).
As for earth side output diode open-circuit.	Normal	Normal	Lower than normal at 6,000 rev/min. 15ACR 23 amp approx. 16ACR 29 amp approx. 17ACR 29 amp approx.	'Field' diode open-circuit.
As for earth side output diode short-circuit.	Normal	Excessive	Very low at 6,000 rev/-min. 7 amp approx.	'Field' diode short-circuit.

If the foregoing tests show the alternator and regulator to be satisfactorily performing, disconnect the test circuit and reconnect the alternator terminal connector.

Now connect a low-range voltmeter (Fig. 5) between the positive terminal of the alternator (the moulded terminal connector is open-ended to facilitate this) and the positive terminal of the battery. Switch on the headlamps, start the engine and increase speed until the alternator runs at approximately 6,000 rev/min. Note the voltmeter reading.

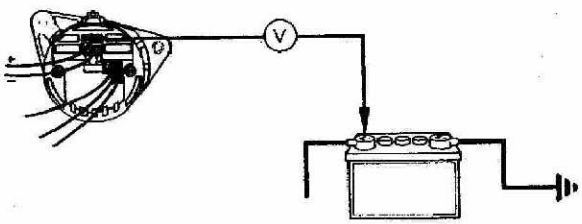

Fig. 5 Charging circuit voltage drop testing — insulated side

Transfer the voltmeter connections to the negative terminals (Fig. 6) of alternator and battery, and again note the meter reading.

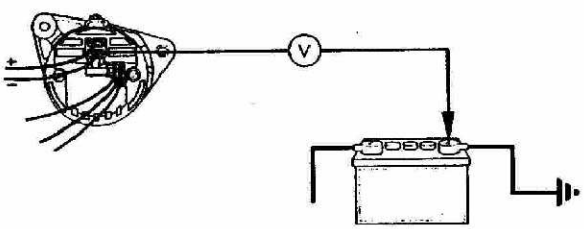

Fig. 6 Charging circuit voltage drop testing — earth side

If the reading exceeds 0.5 volt on the positive side or 0.25 volt on the negative side there is a high resistance in the charging circuit which must be traced and remedied.

(b) Electrical Test Procedure

The following instructions cover the dismantling required to enable the alternator to be tested electrically. If, as a result of these tests (or because the rotor bearings are to be replaced) further dismantling becomes necessary, proceed as described in 4(h).

Disconnect the battery and alternator cables and remove the alternator from the vehicle.

Withdraw the two moulded cover securing screws and remove the cover.

Unsolder the three stator connections to the rectifier assembly noting the order of connection. (See para. 4(g) for soldering procedure).

Withdraw the two brush moulding securing screws, slacken the nut on the rectifier assembly bolt, remove the screw securing the regulator to the slip-ring end bracket and (when fitted) detach the suppressor cable at the rectifier. Withdraw the brush moulding and rectifier assembly together with the short cable which joins them.

(c) Inspection of Brushgear

The brush length when new is ½" (12.6 mm). The serviceability of a brush may be gauged by measuring the amount by which it protrudes beyond the brush-box moulding when in the free position. For a brush to remain serviceable the amount protruding should exceed 0.2" (5 mm). Renew the brush assemblies if the brushes are worn to or below this amount. If brush renewal is necessary, take care not to lose the leaf spring fitted at the side of the inner brush.

Check the brush spring pressure using a push-type spring gauge. This should indicate 9–13 oz (255–368 g) when the brush is pushed back against the spring until the brush face is flush with the housing. Replace a brush assembly which gives a reading appreciably outside these limits where this is not due to the brush movement being impeded for any reason. Clean a sticking brush with a petrol-moistened cloth or, if necessary, by lightly polishing the brush sides on a smooth file.

(d) Inspection of Slip-rings

The surfaces of the slip-rings should be smooth and uncontaminated by oil or other foreign matter. Clean the surfaces using a petrol-moistened cloth, or if there is evidence of burning, very fine glass paper. On no account must emery cloth or similar abrasive be used. No attempt must be made to machine the slip-rings as any eccentricity in the machining may adversely affect the high-speed performance of the alternator.

(e) Rotor

Note. For clarity, the illustration of the electrical testing of the rotor and stator show these components isolated from the remainder of the alternator.

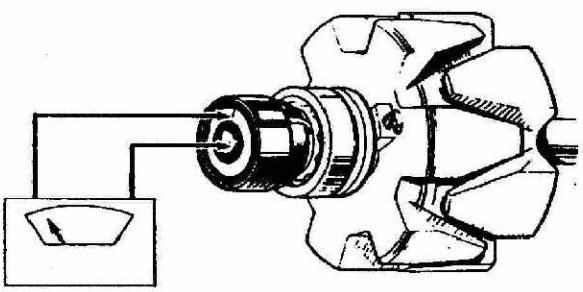

Fig. 7 Measuring rotor winding resistance with ohmmeter

Test the rotor winding by connecting either an ohmmeter (Fig. 7) or a 12-volt battery and ammeter

(Fig. 8) between the slip-rings. The resistance should be as given in 'Technical Data' or the value of current approximately 3 amperes.

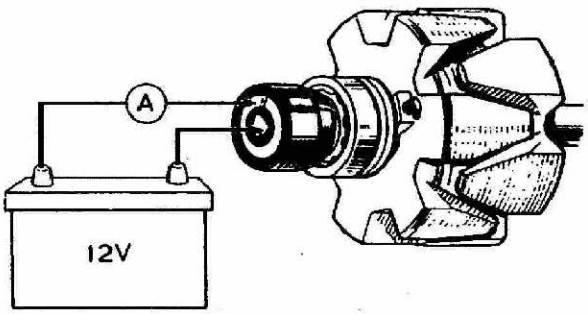

Fig. 8 Measuring rotor winding resistance with battery and ammeter

Test for defective insulation between one of the slip-rings and one of the rotor poles using a 110-volt a.c. mains supply and a 15-watt test lamp (Fig. 9). If the lamp lights, the coil is earthed to the rotor core and a replacement rotor/slip-ring assembly must be fitted.

No attempt must be made to machine the rotor poles or to straighten a distorted shaft.

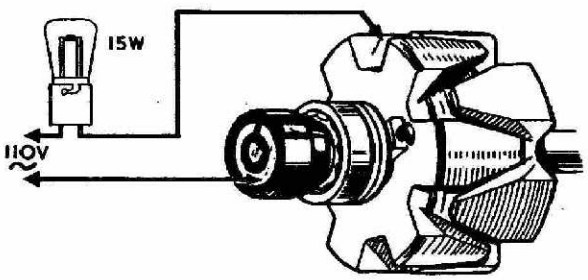

Fig. 9 Insulation test of rotor winding

(f) Stator

Check the continuity of the stator windings by first connecting any two of the three stator cables in series with a 12-volt battery and test lamp of not less than 36-watts (Fig. 10). Repeat the test, replacing one of the two cables by the third cable. Failure of the test lamp to light on either occasion means that part of the stator winding is open-circuit and a replacement stator must be fitted.

Test for defective insulation between stator coils and the lamination pack with the mains test lamp (Fig. 11). Connect the test probes between any one of the three cable ends and the lamination pack. If the lamp lights, the stator coils are earthing and a replacement stator must be fitted.

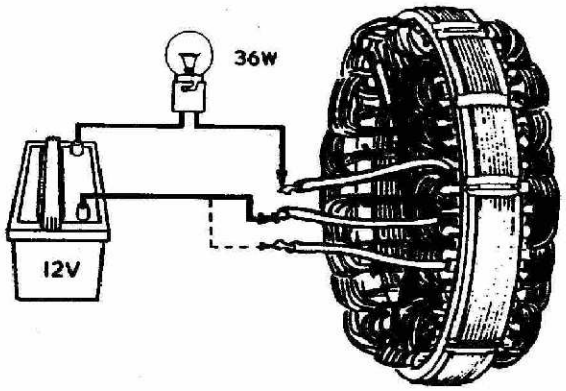

Fig. 10 Stator winding continuity test

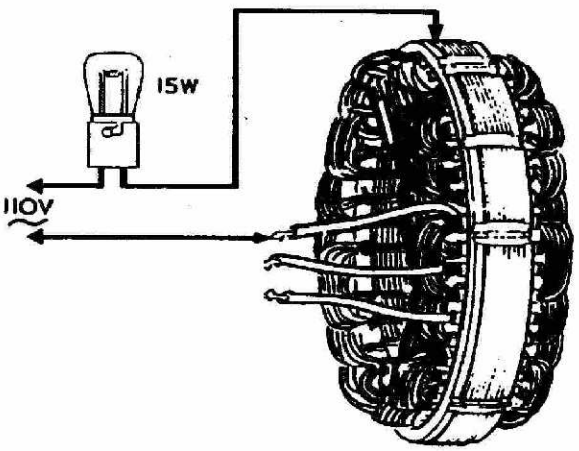

Fig. 11 Insulation test of stator windings

(g) Diodes

In the event of a fault in one or more of the diodes being indicated by the alternator output test (para. 4a), the stator winding connections to the rectifier pack must be unsoldered (para. 4b).

Connect each of the nine diode pins in turn in series with a 1.5 watt test bulb and one terminal of a 12-volt battery (Fig. 12). Connect the other battery terminal to the particular heat sink on the rectifier pack into which the diode under test is soldered. Next, reverse the connections to diode pin and heat sink. The bulb should light in one direction only. Should the bulb light in both tests, or not light in either, the diode is defective and a new rectifier pack must be fitted.

When re-soldering the stator cables to the diode pins use only 'M' grade 45-55 tin-lead solder. Take great care to avoid overheating the diodes or bending the diode pins. The diode pins should be lightly

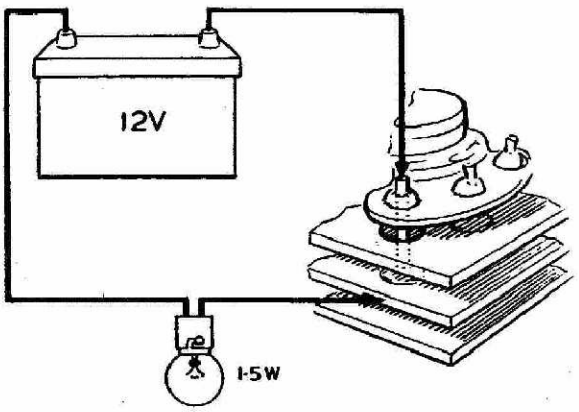

Fig. 12 Simple test for diodes

gripped with a pair of long-nosed pliers (which act as a thermal shunt) and soldering must be carried out as quickly as possible. The operation is shown in Fig. 13.

Fig. 13 Use of thermal shunt when soldering diode connections

(h) Further Dismantling

If as a result of the foregoing electrical tests further dismantling is necessary proceed as follows:

Withdraw the three through bolts. Separate the slip-ring end bracket and stator assembly from the rotor and drive-end bracket — preferably by sleeving a metal tube about 3″ long over the slip-ring moulding so as to engage with the outer ring of the slip-ring end bearing and then carefully drive the bearing from its housing with the alternator positioned vertically, fan lowermost. The tube should be 1.320″ (33.53 mm) outside diameter and bored out to 1.240″ (31.5 mm) for about half of its length. Carefully file away any surplus solder from the field winding terminals which may prevent the tubing from sleeving over the slip-ring moulding. The less preferred method of separating the slip-ring end bracket and stator assembly from the rotor and drive-end bracket is to insert a lever between the stator and the drive-end bracket and carefully prise the two apart until the slip-ring end bearing is clear of its housing.

If necessary, the rotor shaft can be pressed out from the drive end bracket having first removed the shaft nut, washers, pulley, fan and shaft key.

(j) Bearings

The need for bearing replacement during the service life of the alternator is extremely unlikely provided the alternator is mounted correctly and belt tension maintained as recommended. However, should bearing replacement become necessary, proceed as follows:

Drive-end Bearing

Dismantle the alternator as described in 4(b) (i), (ii) and (iv), (it is not necessary to unsolder the rectifier assembly) and also as in 4(h) including the separation of the rotor from the drive end bracket.

The drive-end bearing assembly can be withdrawn following removal of the circlip — see Fig. 1 for details of the bearing assembly.

Slip-ring End Bearing

Dismantle the alternator as described for the drive end bearing. Unsolder the field winding connections to the slip-ring moulding assembly which can then be withdrawn from the rotor shaft. Extract the bearing from the shaft, noting that the shielded side of the bearing faces the slip-ring end moulding. Fit the new bearing and re-engage the slip-ring moulding with the slot in the rotor shaft. Finally, remake the field-to-slip-ring connections using Fry's H.T.3 solder.

When required, the correct lubricant for the alternator bearings is Shell Alvania 'RA'.

(k) Reassembly

Reassembly of the alternator is a reversal of the dismantling procedure given in 4(b) and (h). Ensure that the slip-ring end bearing is positioned as far as it will go along the rotor shaft in the direction of the field assembly. Ensure that the brushes are entered in their housing before refitting the brush moulding. Tighten the through bolts evenly. If the rotor and drive-end bracket have been separated, support the inner ring of the drive-end bearing with the distance collar for the re-assembling operation. Do not use the drive-end as a support for the bearing while fitting the rotor.

Subject: Aluminum door finishers
How do you get the finish back on the Aluminium door finishers?

Jim

Use #00 or #000 steel wool, with a medium touch, takes time. Finish with clear, (flat / semi-gloss), rattle can paint. The clear will dull the shiny alu after steel wool.
I have parked next to concourse cars, hard to tell the diffffff.

Kirk Kvam ©

Armstrong lever arm shocks are available in a variety of damping grades. The variations are made primarily in the valving. The way these devices work is that there are two pistons pushing oil back and forth through an orifice. This orifice is small, so there is resistance to flow due to the viscosity of the oil in the piston chambers. If the size of the connecting hole was not allowed to vary, the damping would be VERY strong for sudden jolts. It would be so strongly damped that it would be rigid for all practical purposes. In order to accomodate sudden jolts, the oil is allowed to force its way past the small orifice through a larger spring-loaded valve. There are actually two separate valves in the valve assembly. One to control the upward jolts (bounce)(#13 in the diagram) and another to control the downward return of the suspension to its rest position (#15).

The springs (#17,18) adjust the damping. When these units were new, there were alternate compression springs available. Kastner said that certain shocks had as standard a steel (grey) colored compression spring, but other shocks had a bright copper colored spring as standard. Mine have the bright copper springs. The "competition" spring has a dull copper or bronze color. I have seen none of these competition springs available nor do I know the various spring strengths to try to get new ones. There are "heavy duty" valve assemblies for certain cars, but none that I know of for the TR's, and I doubt that they are completely interchangeable.

In order to adjust damping today, we can tighten the nut holding the rebound spring and insert spacers (washers)under the compression spring. I have two sources that pretty much agree on what modifications to make. First use 30wt oil for the hydraulic fluid (Kastner recommended 40wt). Next adjust the springs. I have been told to use Harley-Davidson fork oil because engine oil has detergents which will damage the rubber seals, and the fork oil has anti-foaming additives to cut down foam when stressed to the max. You have to use H-D oils because the others use stuff that is maximum 20wt.

My first source says to tighten the nut on the rebound spring "all the way down", and install a 0.070" spacer under the compression spring at the bottom of the bore.

My other source says to tighten the nut on the rebound spring 2 to 4 full turns, and a spacer of 0.040" to 0.080" under the compression spring. Select the amount of adjustment depending on how much damping you want. I decided to try settings near the maximum and ease off from there if they were too harsh or if there was some other problem.

My experience is limited, but successful. I tightened the rebound spring nut by 4 turns (which is almost all the way down). I used 2 brass washers under each compression spring. The washers were obtained from my local hardware store for about 15 cents each. They measured just over 1/2" diameter and 0.038" thickness. I used a file to smooth and slightly thin the washers. I had to ream the center holes large enough to easily pass the rebound spring. The four washers were matched in pairs and I got 0.073" combined thickness on each side. The outer diameter of the washers was 0.563", and the inner diameter was 0.322".

I have found that the damping is quite nice. I am using the TriumphTune 4212 rear springs (420 lbs/inch and about stock ride height). This combination seems very satisfactory. Good damping without being harsh. Total cost for the upgrade: $4.95 for a pint of "heavy duty" (about 30wt) fork oil and about $1.50 for the washers.

Let me know your experiences!

Back to HOME

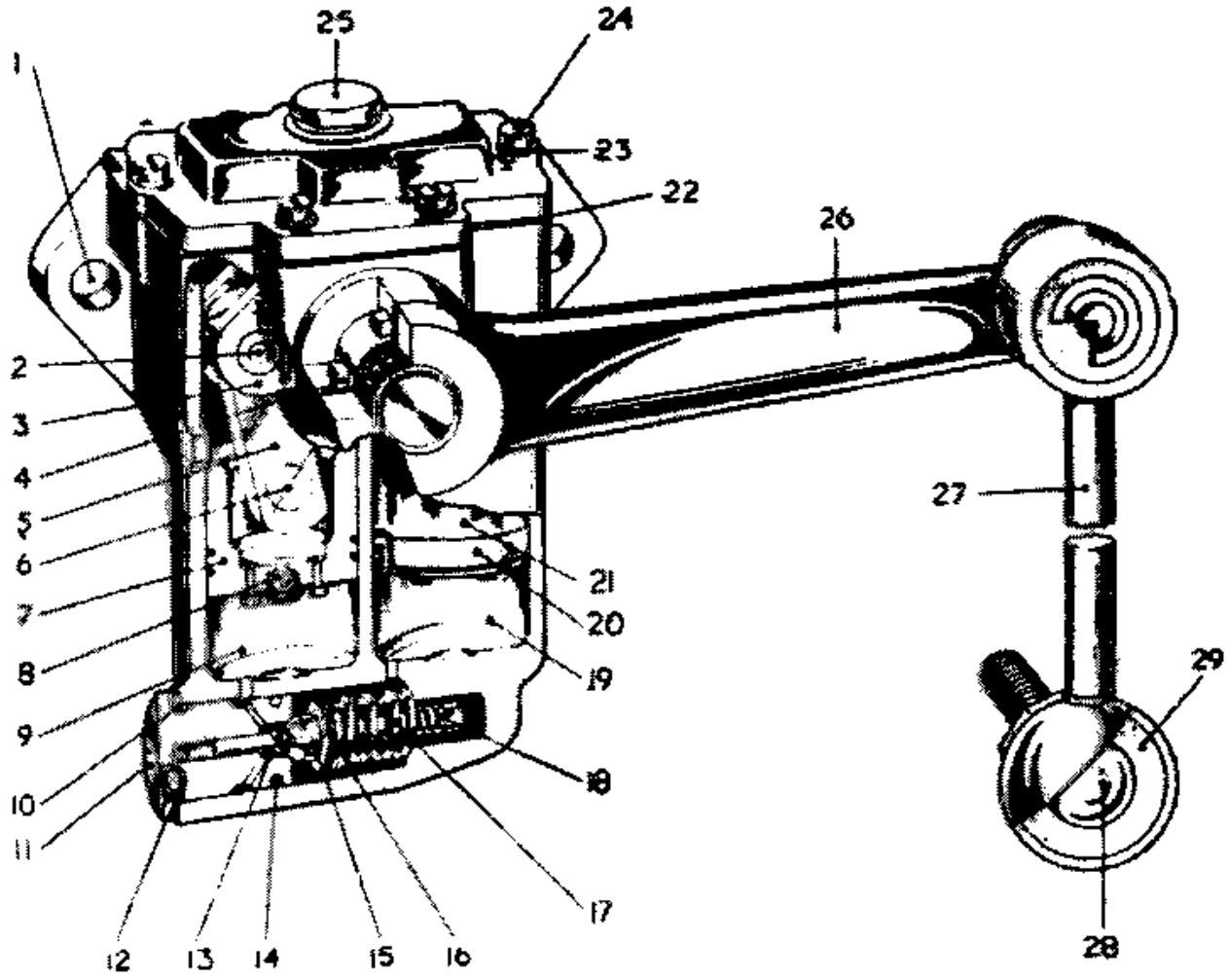

Fig. 11.15. REAR SHOCK ABSORBER COMPONENTS

1 Mounting holes
2 Crank pin
3 Crank plat
4 Oil seal
5 Connecting rod
6 Piston pin
7 Compression or bump piston
8 Recuperating valve
9 Compression or bump cylinder
10 Ring seal
11 Valve screw
12 Valve screw washer
13 Rebound valve
14 Ring seal
15 Compression valve
16 Compression washer
17 Compression spring
18 Rebound spring
19 Rebound cylinder
20 Rebound piston seal
21 Rebound piston
22 Gasket
23 Shakeproof washer
24 Lid screw
25 Filler plug
26 Arm
27 Connecting link
28 Ball end bolt
29 Rubber cushion

BN1&2 TELESCOPIC SHOCK ABSORBERS

Some time ago a friend fitted a telescopic shock absorber kit, from the US, to his BJ8. The ride was definitely improved, but then the problems started, first one front bracket broke and was replaced by the supplier. Later when we looked at the back ones one was severely cracked, it was welded up so the car could be used until the replacement arrived.

The steel tube wall was only 1.5 mm thick, so when I decided to make my own I felt I should use considerably thicker tube walls. The local steel merchant only had steel tube with a 5mm wall thickness, this is way over the 3mm that I thought I would use, but it should never break, also being a weekend welder, I couldn't blow holes in it with the Arc Welder, as might happen with the thinner thickness.

In the - http://autox.team.net/mailman/listinfo/healeys - archives, shocks from the rear of a Hyundai Excel and a VW beetle were suggested and the lengths and fittings for both were about the same. I opted for - GABRIEL GUARDIAN GAS 81464 for the Hyundai Excel and designed my brackets to suit.

I made and fitted the fronts and the ride was defiantly better, the front dipped slightly under braking which never happened with the lever arm shocks. So then the rears were made and fitted, as the weight distribution is 50/50 I used the Hyundai - GABRIEL GUARDIAN GAS 81464 – ones again and was pleased with the result.

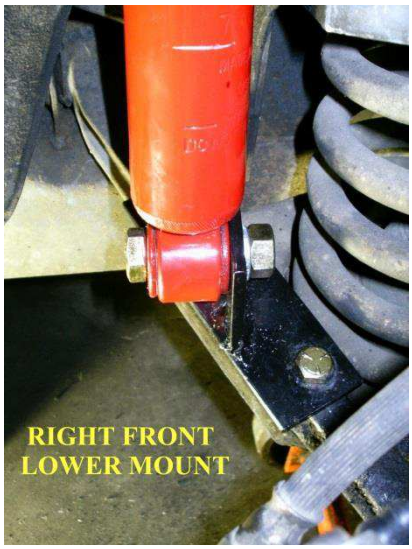

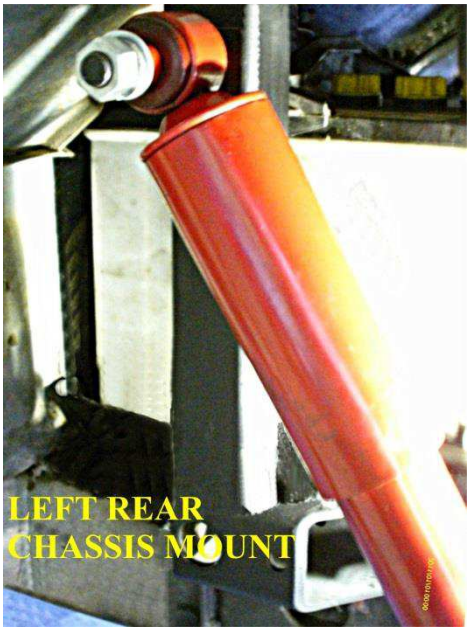

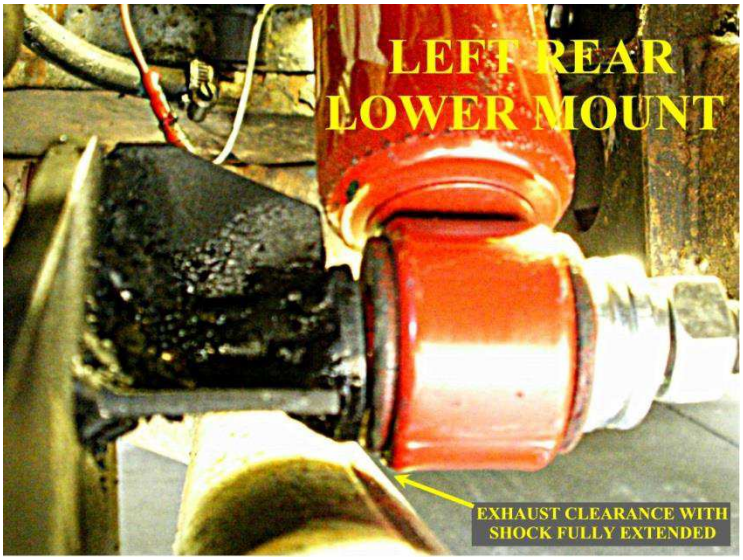

Don Hardie 18/03/2015
healeynut@hotmail.com

FRONT UPPER RIGHT BRACKET

FOR GABRIEL 81464 SHOCK ABSORBER

THE LEFT BRACKET IS A MIRROR IMAGE

Remove valve from original shock and top up oil.

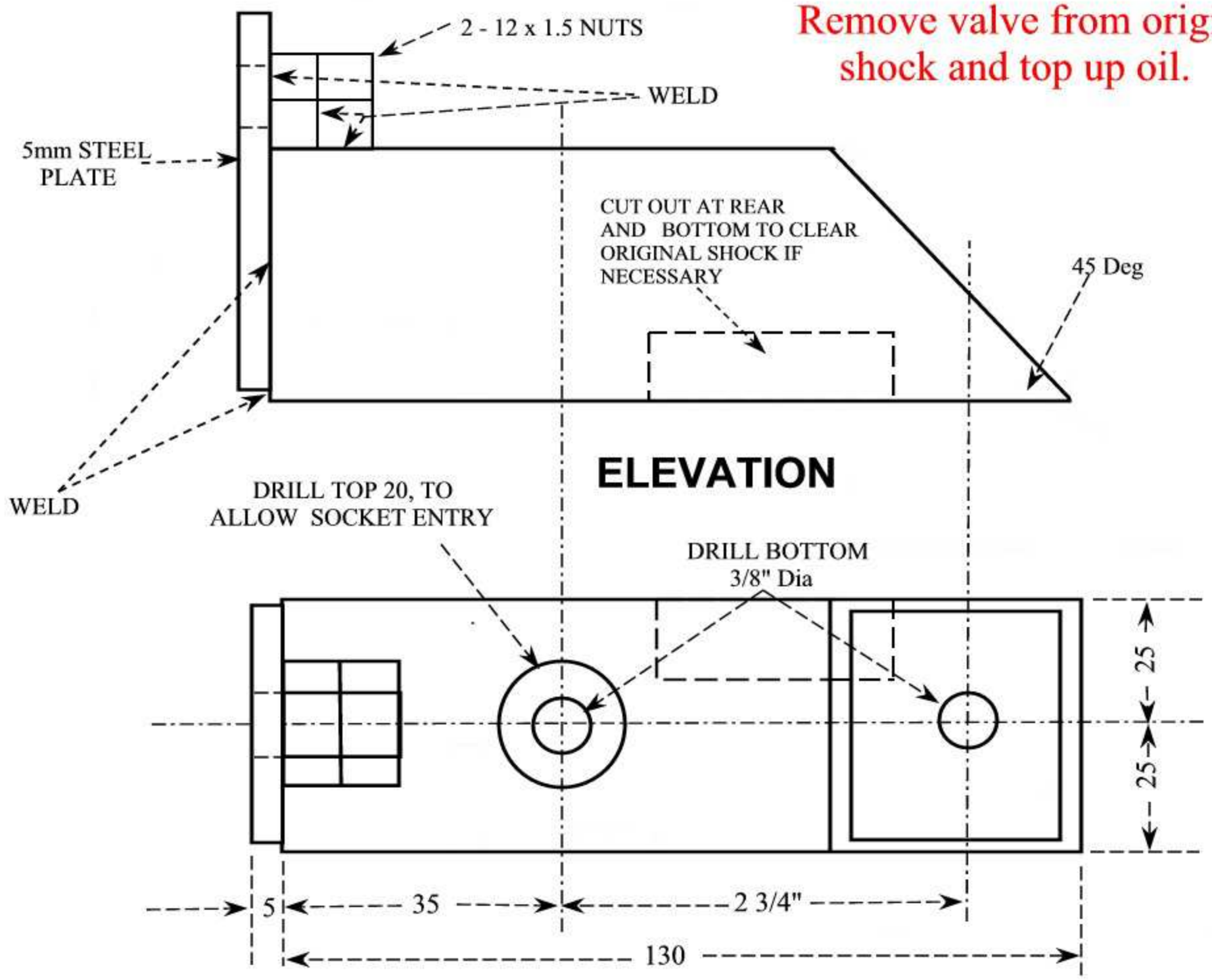

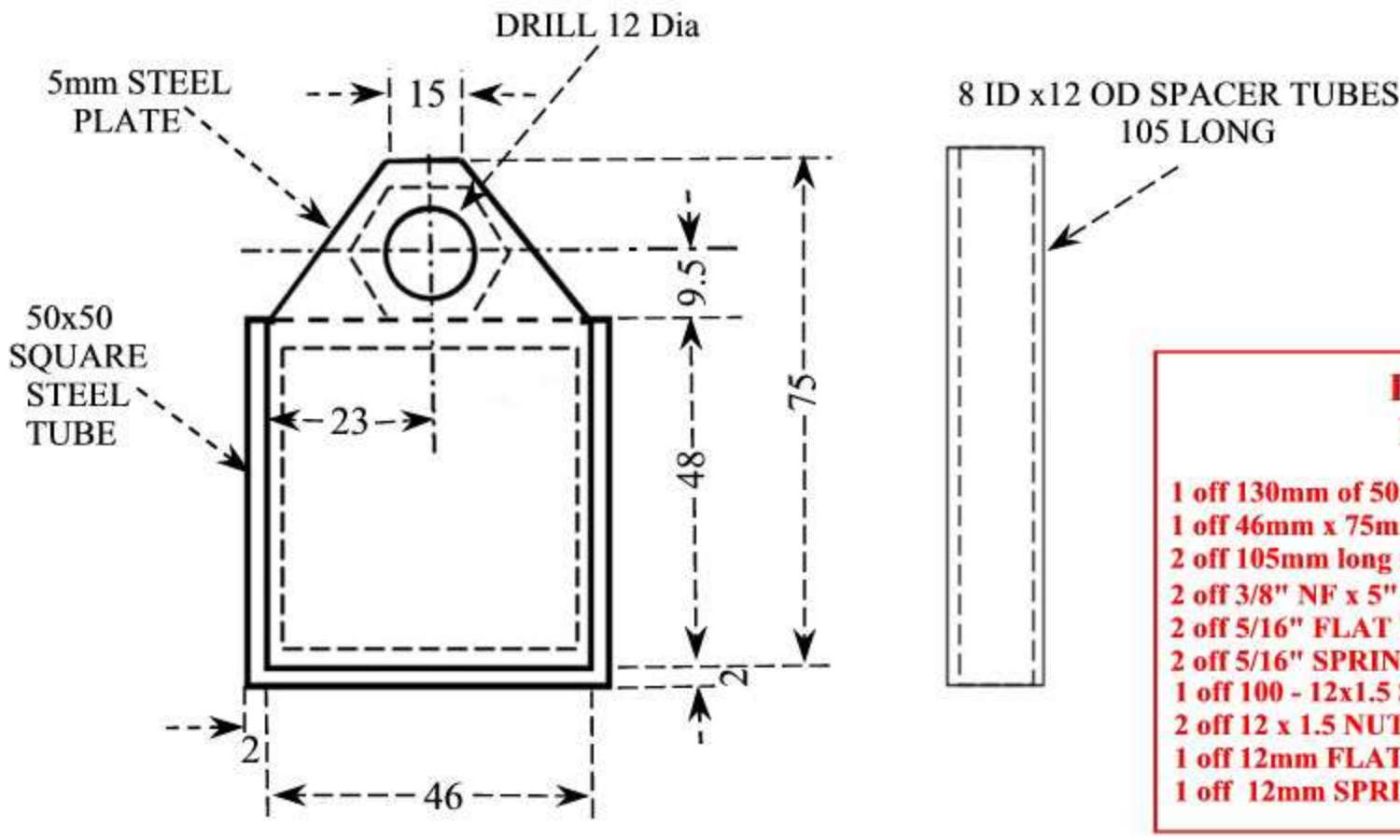

PARTS LIST
For one side

- 1 off 130mm of 50mm 5mm wall SQUARE STEEL TUBE
- 1 off 46mm x 75mm 5mm STEEL PLATE
- 2 off 105mm long x 8mm ID x 12mm OD STEEL TUBE
- 2 off 3/8" NF x 5" STEEL BOLTS
- 2 off 5/16" FLAT WASHERS
- 2 off 5/16" SPRING WASHERS
- 1 off 100 - 12x1.5 STEEL BOLT
- 2 off 12 x 1.5 NUTS
- 1 off 12mm FLAT WASHER
- 1 off 12mm SPRING WASHER

Don Hardie healeynut@hotmail.com

NOT TO SCALE

FRONT LOWER RIGHT BRACKET

FOR GABRIEL 81464 SHOCKABSORBER

LEFT BRACKET IS A MIRROR IMAGE

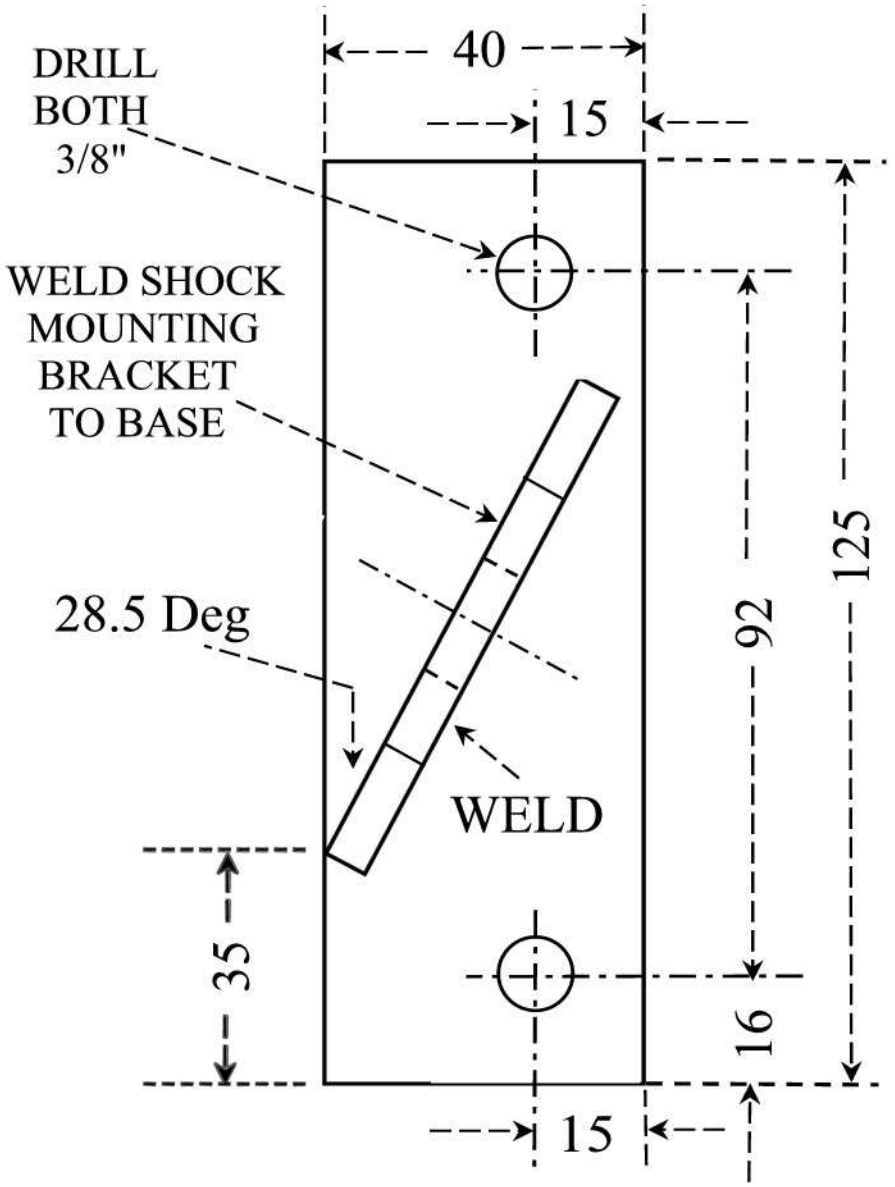

NOTE

TACK THE SHOCK MOUNTING BRACKET IN PLACE AND THEN CHECK TO MAKE SURE ITS AT RIGHT ANGLES TO THE CHASSIS BEFORE THE FINAL WELD

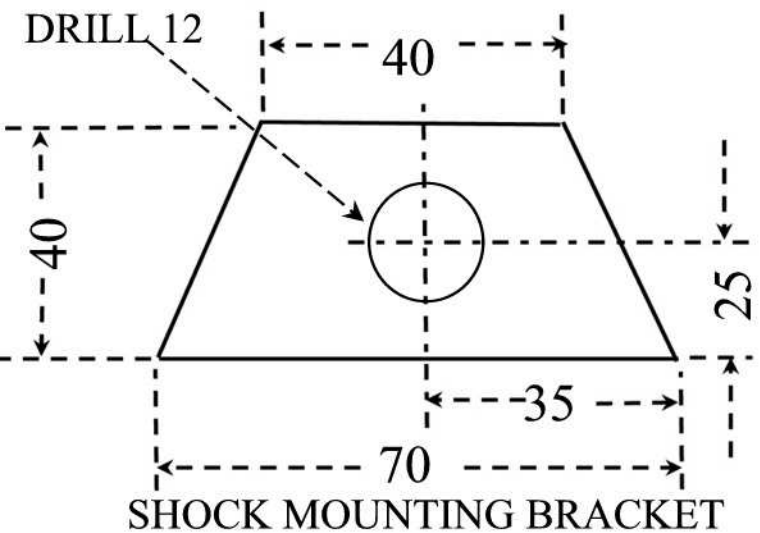

PARTS LIST
For one side

1 off 125mm of 40mm 5mm STEEL BAR
1 off 70mm of 40mm 5mm STEEL BAR
2 off 1" X 3/8" NF BOLTS
2 off 3/8" NF NUTS
2 off 3/8" SPRING WASHERS
1 off 100mm - 12mm x 1.5mm BOLT
1 off 12mm x 1.5mm NUT
1 off 12mm FLAT WASHER
1 off 12mm SPRING WASHER

Don Hardie healeynut@hotmail.com

NOT TO SCALE

REAR CHASSIS MOUNTING FOR GABRIEL 81464 SHOCK ABSORBER

(To replace lever arm shock absorber)

LEFT HAND SIDE SHOWN

Mirror reverse for Right Hand Side

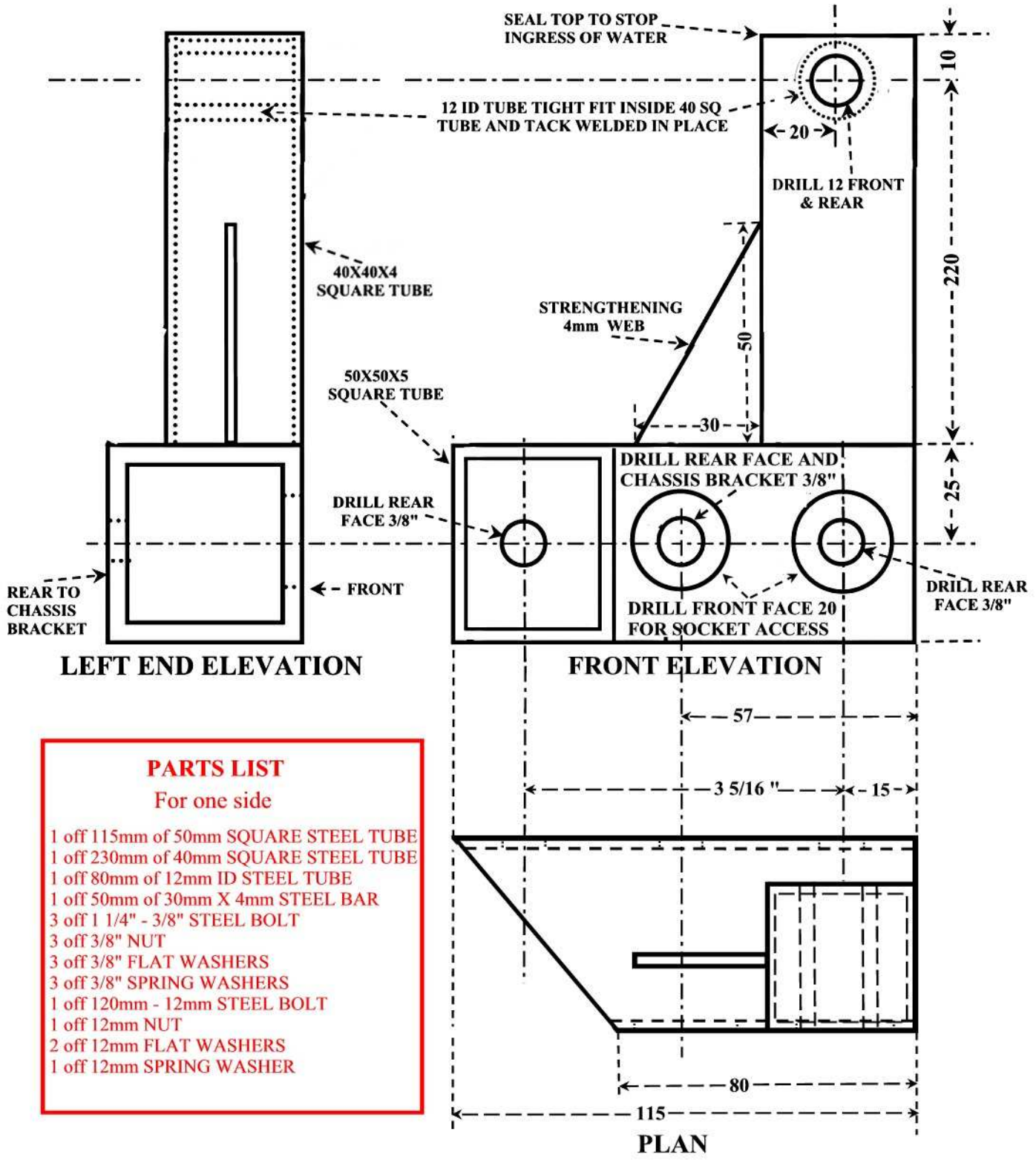

PARTS LIST

For one side

1 off 115mm of 50mm SQUARE STEEL TUBE
1 off 230mm of 40mm SQUARE STEEL TUBE
1 off 80mm of 12mm ID STEEL TUBE
1 off 50mm of 30mm X 4mm STEEL BAR
3 off 1 1/4" - 3/8" STEEL BOLT
3 off 3/8" NUT
3 off 3/8" FLAT WASHERS
3 off 3/8" SPRING WASHERS
1 off 120mm - 12mm STEEL BOLT
1 off 12mm NUT
2 off 12mm FLAT WASHERS
1 off 12mm SPRING WASHER

Don Hardie healeynut@hotmail.com

NOT TO SCALE

REAR LOWER MOUNTING

FOR GABRIEL 81464 SHOCKABSORBER
(To replace lower spring mounting plate)

RIGHT HAND for 4 STUD REAR END

(Mirror reverse for left hand and the exhaust may have to be lowered)

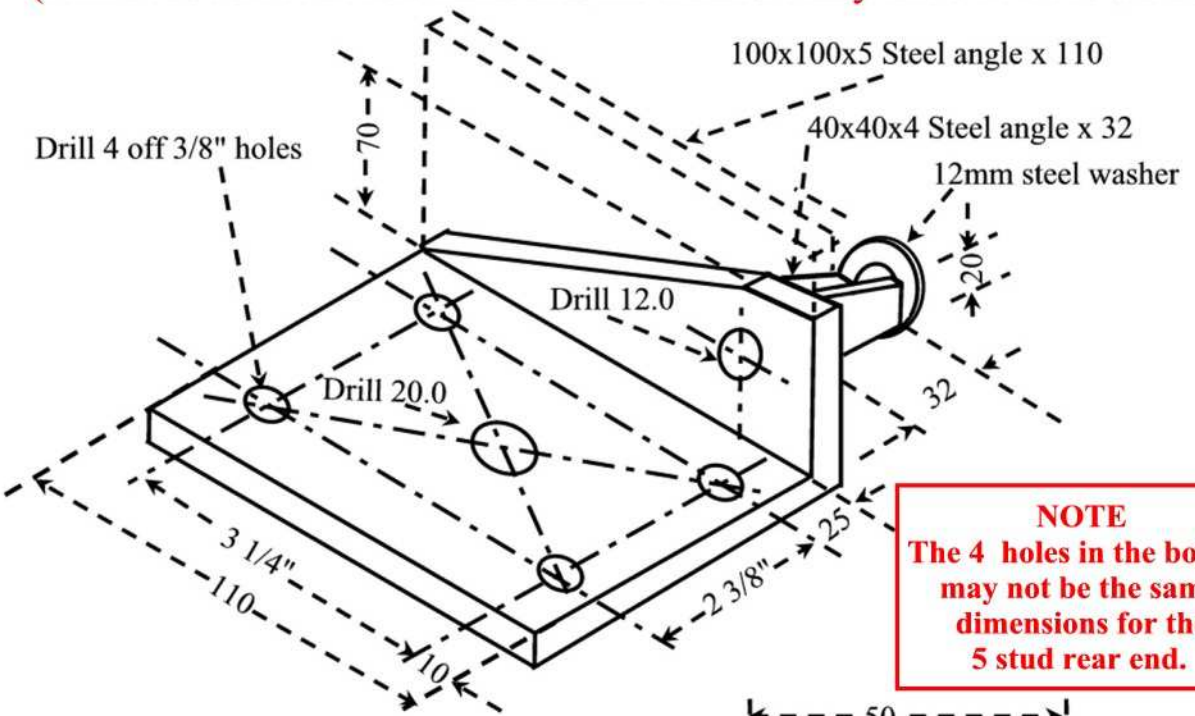

NOTE
The 4 holes in the bottom may not be the same dimensions for the 5 stud rear end.

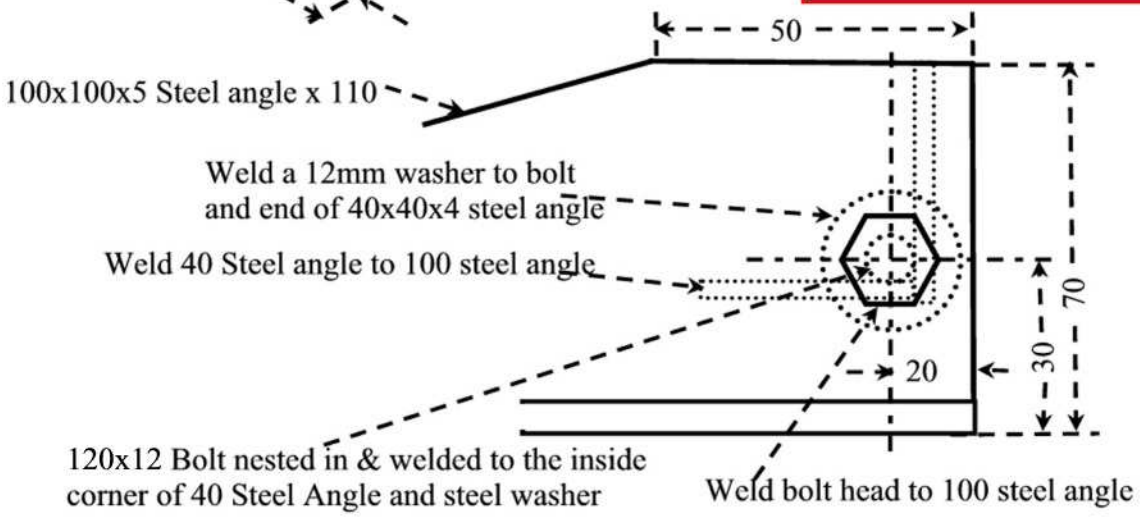

DETAIL OF 12mm BOLT POSITION

PARTS LIST
For one side

1 off 110mm of 100mm x 100mm x 5 mm STEEL ANGLE
1 off 32mm of 40mm x 40mm x 4mm STEEL ANGLE
1 off 120mm - 12mm STEEL BOLT
1 off 12mm STEEL NUT
2 off 12mm FLAT WASHERS
1 off 12mm SPRING WASHER

Don Hardie healeynut@hotmail.com
NOT TO SCALE

REAL HEALEY NATTER

SEPTEMBER 1995

AUSTIN LINEAGE

The current issue of BMW Australia's Magazine has an article "Where have all the badges gone", which looks at all the marques that BMW acquired when they bought Rover.

The lineage of the current Rover company reads like War and Peace ie:- Austin Rover, British Leyland, British Motor Holdings, Leyland, Rover, Alvis, Triumph, Standard, BMC, Austin, Vanden Plas, Morris, Wolseley, Riley, MG etc.

The article starts with a double page spread of the Unipart sponsored red 2754DK with the caption "Very British: The Austin Healey 3000 was one of the most popular sports cars of its time, made for "real men" only."

Other extracts are as follows:-

"... Suffice to say that numerous members of the fairer sex have long been seriously flirting with those mean machines of yesteryear,"

"The history of Rover reads like Liz Taylor's catalogue of spouses."

"Names like Austin Healey, MG or Triumph evoke very different associations (from Rover and Land Rover - DMH).

The air begins to vibrate, tyres squeal, petrol gets into the blood stream: we are talking about hot-blooded tarmac-burners, an all out driving experience, the ultimate joys of motoring."

"Austin Healey, MG and Triumph were fierce rivals right into the sixties."

"... the big Austin Healeys belonged to the exclusive luxury car sector."

"The "Big Healeys" meanwhile, were proving powerful but highly unpredictable ..."

"Top international rally drivers dubbed them "The Pig"."

"The very first BMW was an the Austin Seven built under licence." (1928 –Don H)

"BMW is going to help Rover assert itself as an independent marque."

"And Rover chairman John Towers confesses that there a number of badges he personally would like to see back on the roads. Watch this space ..."

After the recent release of the MG-F it will be interesting to see if the Healey family will be favourable to the resurrection of the Austin Healey name on a modern design.

Last months Flat Chat had a BMW 635CSI on page 18 and The Sydney Morning Herald article on page 25 and now this month the above. Does this mean we are being clandestinely taken over ?

DMH-000
(THE HARDIE'S 100-4)
P.S. Barry Campbell's Technical Report last month about 10 Million points openings on a 6, equates to only 6.67 Million on a 4. More proof that us 4s are more efficient!

INDEX FOR AUSTIN SERVICE JOURNALS

These Austin pages and the 5 Tool Kit photographs are from the collection of the Late Bill Johnstone and scanned by Scott Johnstone.

Bill Johnstone at the wheel of his 2 week old 100 in 1954

ACCELERATOR CONTROL RODS AND BALL JOINTS

A 30, A 40/50, A 90 Six, Austin-Healey 100

The threaded ends of the accelerator control rods have been changed from a 2 BA to No. 10 U.N.F. thread. The ball joints and nuts have also had their threads changed to suit.

INTERCHANGEABILITY

The new parts are not separately interchangeable with the old ones. If the old control rods are not available then the new rod should be used together with the new ball joints and nuts.

SUMMARY OF ALTERATION

Type	Range	Plate	Description	Number per Vehicle	Austin Part Number	Parts List Publication Number
A30	To C.E. 101062		Control rod with ball joints (Alternatives)	1	3H 1223	A30 Pub. 883B, Controls, p. 1
			Control rod with ball joints (Alternatives)	1	1G 1311	
			Locknut	1	2K 4012	
			Ball joint, control rod lever end	1	2H 22	
			Ball joint, control rod carburetter end	1	2H 2182	
			Nuts	2	2K 4012	
	C.E. 101063 on		Controls rod, less ball joints	1	11B 2046	
			Locknut	1	FNZ 103	
			Ball joint, control rod lever end	1	11B 2044	
			Ball joint, control rod carburetter end	1	11B 2044	
			Nuts	2	FNZ 103	
A40/A50	To C.E. 38649		Control rod with ball joints, accelerator shaft lever to throttle shaft lever	1	1G 2005	A40/A50 Pub. 1099A Controls, p. 1
			Ball joint	1	2H 22	
			Ball joint	1	2H 2182	
			Nuts, ball joints to levers	2	2K 4012	
	C.E. 38650 on		Control rod less ball joints	1	11B 2043	
			Ball joints	2	11B 2044	
			Nuts, ball joints to levers	2	FNZ 103	
Austin-Healey 100	C.148528–223383		Control rod (B.A. threads), pedal shaft lever to relay lever	1	2K 8277	Austin-Healey 100 Pub. 1050 Controls pp. 1/2
	C.138031–223383		Ball joints for rod	2	2H 22	
			Nuts, joints to levers and rod	3	2K 4012	

Continued

FOR YOUR RECORDS	
	PARTS LISTS
	STOCK CARDS
	PARTS ORDERED
	ALTERATIONS NOTED

13 (14)

ACCELERATOR CONTROL RODS AND BALL JOINTS—*continued*

SUMMARY OF ALTERATION—*continued*

Type	Range	Plate	Description	Number per Vehicle	Austin Part Number	Parts List Publication Number
Austin-Healey 100	C.223384 on		Control rod (U.N.F. threads), pedal shaft lever to relay lever.	1	11B 2078	Austin-Healey 100 Pub. 1050 Controls pp. 1/2.
			Ball joints for rod . . .	2	11B 2044	
			Nuts, joints to levers and rod .	3	FNZ 103	
	C.138031–223383		Control rod (B.A. threads), relay lever to bellcrank lever on carburetter shield . . .	1	1B 2695	
			Ball joints for rod . . .	2	2H 22	
			Nuts, ball joints on lever and rod	3	2K 4012	
	C. 223384 on		Control rod (U.N.F. threads), relay lever to bellcrank lever on carburetter shield . .	1	11B 2075	
			Ball joints for rod . . .	2	11B 2044	
			Nuts, ball joints on levers and rod	3	FNZ 103	
	C. 138031–223383		Control rod (B.A. threads), ball-crank on carburetter shield to throttle spindle lever . .	1	1B 2694	
			Ball joints	2	2H 22	
			Nuts, ball joints to levers and rod	3	2K 4012	
	C.223384 on		Control rod (U.N.F. threads), bellcrank on carburetter shield to throttle spindle lever . .	1	11B 2074	
			Ball joints	2	11B 2044	
			Nuts, ball joints to levers and rod	3	FNZ 103	

(14)

AMENDMENTS TO LITERATURE—*continued*

A40/A50 PARTS LIST, PUBLICATION 1099A/2. Section "Radiator Cowl".	Page 9.	Add the following under heading "Radiator Cowl" :— Radiator grille complete – 1 – 38G 254 Cancel the following :— Grille only, with nuts and retainers – – – – 1 – 4G 8579 Square nuts, for nut retainers– 4 – 2K 2535
AUSTIN-HEALEY 100, PUBLICATION 1050, Section "Engine".	Page 3.	Amend part number 2K 5946 for Bolts to engine front plate, to read 2K 8490.
Section "Radiator".	Page 1.	Amend part number 2K 1341, for Washers, to read PWZ 204, and amend quantity to read 2 instead of 8. Amend quantity of 2K 5894, to read 2 instead of 6.
Section "Hood".	Page 1.	Add the following after Hood assembly with frame and covering :— Screws, hood assembly to rear quarter inner panel – – 6 – 53K 1138 Nuts for screws – – – 6 – FNZ 105 Plain washers – – – 6 – PNZ 105 Spring washers – – – 6 – LWZ 205
THE AUSTIN SERVICE JOURNAL, CARS—VOLUME 23, Section "Engine".	Page 58.	Amend the second sentence to read :— " The length has been increased from $\frac{21}{32}$" (16·67 mm.) to $\frac{11}{16}$" (17·46 mm.) and the skirt turned slightly towards the valve guide."
THE AUSTIN SERVICE JOURNAL, CARS—VOLUME 24, Section "Body".	Page 25.	Under heading "Interchangeability" amend the phrase "old type" to read "intermediate type".
Section "Engine".	Page 42.	Amend part number 11B 86 for Starter gear to read 11B 356.
	Page 64.	In the caption under Fig. 30 the letters A and B should be reversed.
	Page 81.	Amend quantity of all items to read 8 instead of 4.
Section "Stores Data".	Page 38.	Amend A125 and A135 "Commencing Car/Engine number" to read 12100.
	Page 41.	Amend the page for item 1 to read 3 instead of 13.

Continued

AMENDMENTS TO LITERATURE—*continued*

A30 PARTS LIST, PUBLICATION 883B/4.	Page 19.	Add after item 11 the following:— Rubber washers – – 2 – 14B 4597
A 40 PARTS LIST, PUBLICATION 1099, Section "Engine"	Page 23.	Amend part number 2K 7483, for Washers to read:— Fibre washers – – 2 – 2K 4954
Section "Mouldings"	Page 4.	Amend part number 4G 4619, for Exterior mouldings, rear quarter right hand, to read 4A 4619.
Section "Doors"	Page 5.	Delete the following item:— Spring guide screws – 4 – 14G 922 Add the following items:— Spring guide rods – – 4 – 7H 9748 Screws for rods – – 4 – 7H 9747
Section "Mudwings"	Page 3.	Amend part number 4G 2271 for Front apron (5.25× 17 tyres) to read 4G 2273. Amend part number 4G 2273, for Front apron (5.00× 17 tyres) to read 4G 2271.
A 40/A 50 PARTS LIST, PUBLICATION 1099A, Section "Roof".	Page 1.	Amend part number 4G 1474, for Handle to read 14G 6741.
A 40/A 50 PARTS LIST, PUBLICATION 1099A/2.	Page 10.	Amend part number 4G 6932, for Plates "Austin of England" to read 4B 6932.
THE AUSTIN-HEALEY 100, PUBLICATION 1050, Section "Electrical".	Page 6.	Amend part number 14B 1951, for Rubber sleeve to read 4G 1657.
Section "Body Shell"	Page 1.	Add after Screws, outer to inner wings, HNS 0407 the following:— Spring washers – – 4 – LWN204 Add the following after Bonnet surround assembly. Divisional panel, radiator to grille – – – 1 – 14B 2757 Screws, divisional panel to front apron – – 2 – 51K 2636 Nuts for screws – – 2 – FNN 103 Plain washers – – – 4 – 2K 9907 Spring washers – – 2 – LWN203 Screws, divisional panel to bonnet support and plate 1 – 51K 2636 Nut for screw – – 1 – FNN 103 Plain washers – – – 2 – 2K 9907 Spring washer – – – 1 – LWN203

Continued

AMENDMENTS TO LITERATURE—*continued*

THE AUSTIN-HEALEY 100, PUBLICATION 1050. Section "Floor Fittings"	Page 1.	Add the following after Gearbox cover, left hand:—			
		Rivets, gearbox cover right hand to gearbox – –	9	–	5C 5119
		Screws, tunnel extension to floor – – – –	4	–	PTZ 606
		Add the following item:—			
		Screws for blanking redundant holes in cold air duct	6	–	PTZ 803
Section "Hood"	Page 1.	Add under Hood Assembly the following:—			
		Webbing, hood cover –	2	–	14B 4825
		Screws, webbing to hood frame – – – –	4	–	54K 3014
		Washers – – – –	4	–	6K 9062
Section "Boot"	Page 1.	Add after Sealing strips, sides, the following:—			
		Sealing rubber – –	1	–	14B 5486
Section "Casings"	Page 2.	Add the following items:—			
	To B.1952	Rear quarter inner covering assembly, right hand –	1	–	14B 2116
		Rear quarter inner covering assembly, left hand –	1	–	14B 2117
	B.1953 on	Rear quarter inner covering assembly, right hand –	1	–	4B 2147
		Rear quarter inner covering assembly, left hand –	1	–	4B 2148
	To B.1952	Heelboard covering assembly – – – –	1	–	4B 2118
	B.1953 on	Heelboard covering assembly – – – –	1	–	4B 2149
	To B.1952	Rear wheel arch covering assembly, right hand –	1	–	4B 2119
		Rear wheel arch covering assembly, left hand –	1	–	4B 2120
	B.1953 on	Rear wheel arch covering assembly, right hand –	1	–	4B 2150
		Rear wheel arch covering assembly, left hand –	1	–	4B 2151
	To B.1952	Boot floor main covering assembly – – –	1	–	4B 2121
	B.1953 to B.5638	Boot floor main covering assembly – – –	1	–	4B 2152
	B.5639 on	Boot floor covering (large)	1	–	14B 4578
		Binding for boot floor covering (large) – –	1	–	14B 4579
		Boot floor covering (small)	1	–	14B 4580
		Binding for boot floor covering (small) – –	1	–	14B 4581
		Boot side floor covering –	2	–	14B 4582
		Binding boot side covering	2	–	14B 2583

Continued

56

AMENDMENTS TO LITERATURE—*continued*

THE AUSTIN-HEALEY 100, PUBLICATION 1050.
Section "Windscreen"

Page 1. Add the following items:—

Pad for stanchion foot, right hand	1	14B 4876
Pad for stanchion foot, left hand	1	14B 4877

Section "Bonnet"

Page 1. Add the following items:—

Bonnet lock support bracket	1	14B 1809
Screws, bracket to dash front panel	3	51K 2637
Nuts for screws	3	FNN 103
Plain washers	6	6K 9695
Spring washers	3	2K 1209

THE AUSTIN SERVICE JOURNAL, CARS—VOLUME 24,
Section "Body"

Page 32. Add the following data after item 18:—

Screws, facia panel to fixing bracket	4	PMP 0310
Nuts for screws	4	FNZ 103
Plain washers	4	PWZ 103
Spring washers	4	2K 1209
Screw, choke control bracket to facia panel	1	PMP 0310
Nut for screw	1	FNZ 103
Plain washer	1	PWZ 103
Spring washer	1	2K 1209

Page 41. Add the following items at the bottom of the page:—

Brackets for door check arm	2	14B 4466
Pivot screws	2	RMP 0308
Screws, brackets to hinge pillar	4	51K 1097
Nuts for screws	4	FNN 103
Plain washer	4	6K 9695
Spring washer	4	2K 1209

Page 45. Amend part number RMP 0310 to read PMP 0310 and part number 2K 9907 to read 53K 3151.
Add the following item under Screw for facia panel:—

Plain washer	1	PWP 103

Section "Engine"

Page 5. Delete the following item—

Injection pump flange nut spanner	1	1F 8336

Page 41. Amend part number 11B 245, for Crankshaft with bush, to read 11B 345.

Page 50. Amend part number 2K 7483, for Fibre washers, to read 2K 4954.
Remarks : Thicker fibre washers now used to prevent risk of banjo bolt touching the bottom of the tapped hole in pump boss.

THE AUSTIN SERVICE JOURNAL, CARS—VOLUME 25,
Section "Engine"

Page 10. Amend Publication 1050, Engine, page 12, to read Publication 1050, Engine, pages 1 and 2.

Section "Fuel Tank"

Page 1. B.11345 on Add the following in second panel:—

Boot lid assembly	1	4G 4017

Continued

AMENDMENTS TO LITERATURE—*continued*

A 40/A 50 PARTS LIST, PUBLICATION 1099A, Section "A 40 Engine".

Page 7. Amend the following items:—

A 40 Oil dipper rod	1	1G 2506
A 44 Tube for rod	1	1F 1400

To read:—

C.R. 101–44880	A 43 Oil dipper rod (11G 64 may be used)	1	1G 2506
	A 44 Tube for rod (1B 1063 may be used)	1	1F 1400
C.E.44881 on	Oil dipper rod	1	11G 64
	Tube for rod	1	1B 1063
	Dust cap	1	1B 1735

Section "A 50" Engine".

Page 8. Amend the following items:—

A 43 Oil dipper rod	1	1G 2506
A 44 Tube for rod	1	1F 1400

To read:—

C.E. 101–44880	A 43 Oil dipper rod (11G 64 may be used)	1	1G 2506
	A 44 Tube for rod (1B 1063 may be used)	1	1F 1400
C.E. 44881 on	Oil dipper rod	1	11G 64
	Tube for rod	1	1B 1063
	Dust cap	1	1B 1735

AUSTIN-HEALEY 100 PARTS LIST, PUBLICATION 1050, Section "Rear Suspension"

Page 1. Amend part number 1B 5075 for Rear spring, with bushes to read 11B 5075.

Section "Heater".

Page 1. Amend part number 14B 2013 for Rheostat switch to read 2H 9354.

Amend part number 14B 2014 for Knob for switch to read 4K 5888.

THE AUSTIN SERVICE JOURNAL, CARS—VOLUME 24, Section "Body".

Page 58. Amend part number 51K 2018 for Screws, fixing strap assembly to dash to read HZS 0405.

Amend part number 6K 9107 for Plain washers to read LWZ 204.

AMENDMENTS TO LITERATURE—*continued*

A 40/A 50 PARTS LIST, PUBLICATION 1099A, Section "A 40 Engine".

Page 7. Amend the following items:—

A 40 Oil dipper rod	1	1G 2506
A 44 Tube for rod	1	1F 1400

To read:—

C.R. 101–44880	A 43 Oil dipper rod (11G 64 may be used)	1	1G 2506
	A 44 Tube for rod (1B 1063 may be used)	1	1F 1400
C.E.44881 on	Oil dipper rod	1	11G 64
	Tube for rod	1	1B 1063
	Dust cap	1	1B 1735

Section "A 50" Engine".

Page 8. Amend the following items:—

A 43 Oil dipper rod	1	1G 2506
A 44 Tube for rod	1	1F 1400

To read:—

C.E. 101–44880	A 43 Oil dipper rod (11G 64 may be used)	1	1G 2506
	A 44 Tube for rod (1B 1063 may be used)	1	1F 1400
C.E. 44881 on	Oil dipper rod	1	11G 64
	Tube for rod	1	1B 1063
	Dust cap	1	1B 1735

AUSTIN-HEALEY 100 PARTS LIST, PUBLICATION 1050, Section "Rear Suspension"

Page 1. Amend part number 1B 5075 for Rear spring, with bushes to read 11B 5075.

Section "Heater".

Page 1. Amend part number 14B 2013 for Rheostat switch to read 2H 9354.

Amend part number 14B 2014 for Knob for switch to read 4K 5888.

THE AUSTIN SERVICE JOURNAL, CARS—VOLUME 24, Section "Body".

Page 58. Amend part number 51K 2018 for Screws, fixing strap assembly to dash to read HZS 0405.

Amend part number 6K 9107 for Plain washers to read LWZ 204.

AMENDMENTS TO LITERATURE—*continued*

A 70 PARTS LIST, PUBLICATION 853.	Page 56.	Amend description for part number 3H 921 to read:— "Bulb, 12-volt, 45/40-watt, Duplo-hooded".
A 70 PARTS LIST, PUBLICATION 780A.	Page 60.	Amend description for part number 3H 921 to read:— "Bulb, 12-volt, 45/40-watt, Duplo-hooded".
A 90 PARTS LIST, PUBLICATION 787.	Page 70.	Amend description for part number 3H 921 to read:— "Bulb, 12-volt, 45/40-watt, Duplo-hooded".
AUSTIN-HEALEY 100 PARTS LIST, PUBLICATION 1050.	Page 5.	Amend description for part number 3H 921 to read:— "Bulb, 12-volt, 45/40-watt, Duplo-hooded".
THE AUSTIN SERVICE JOURNAL, VOLUME 24, Section "Engine".	Page 35.	Against the panel for A 125 and A 135 insert the following Engine Numbers:— To E.10459. E.10460 on.
THE AUSTIN SERVICE JOURNAL, VOLUME 25, Section "Engine".	Page 13.	Add the following data under "Commencing Engine Numbers":— A 135 - - - - - - - 12403

AMENDMENTS TO LITERATURE—*continued*

AUSTIN-HEALEY 100, PUBLICATION 1050. Section "Seats".	Page 1.	Amend part number 14B 1236, for Centre tunnel pad assembly, to read 4B 1236.
Section "Hood".	Page 1.	Add after item 13 the following items:—
		Screws for toggle fasteners 4 - 6K 9667
		Washers - - - 4 - 54K 3177
		Dome nuts - - - 4 - 14B 5683
		Screws, fasteners to frame 4 - 54K 2557
		Dome nuts - - - 4 - 14B 1997
		Plain washers - - 4 - 6K 9562
		Delete the following item:—
		Dome nuts - - - 4 - 14B 1997
		Add after item 1 the following items:—
		Hood frame assembly - 1 - 7H 9735
		Hood covering - - 1 - 7H 9736
THE AUSTIN SERVICE JOURNAL, CARS—VOLUME 23. Section "Body".	Page 55.	Amend part number 3H 5478 for Lock cover and escutcheon to read 3A 5478.
THE AUSTIN SERVICE JOURNAL, CARS—VOLUME 24. Section "Engine".	Page 39.	Amend part number 53K 1028 for Setscrews, rear cover to crankcase, to read 53K 1045.
		Amend part number 1K 52 for Dowels for rear plate to read 1K 51.
		Amend part number 2K 4974 for Washer for setscrews, cylinder side cover to read 6K 516.
	Page 42.	Amend part number 2K 6958 for Washer, oil pump locating screw, to read 6K 500.
	Page 46.	Amend item 30, part number 1G 2813 for Control rod, accelerator lever to throttle shaft lever, to read 11B 2043.
	Page 51.	Amend item 3 to read:—
		Setscrews, mounting plate 4 - 2K 3141
		Add after item 3 the following items:—
		Studs, gearbox to gearbox mounting plate - - 2 - 2K 8118
		Spring washers for studs - 2 - LWN 106
		Nuts for studs - - 2 - 2K 3977

Continued

FOR YOUR RECORDS	
	PARTS LISTS
	STOCK CARDS
	PARTS ORDERED
	ALTERATIONS NOTED

AMENDMENTS TO LITERATURE—*continued*

16-H.P. TAXI AND HIRE-CAR PARTS LIST, PUBLICATION 1149. Section "Gearbox".	Page 1.	Amend the following item:—			
		Gearbox assembly	1	–	B3-279
		To read:—			
		Gearbox assembly (use B3-628 with 7H 3189)	1	–	B3-279
		Amend the following item:—			
		Gearbox assembly	1	–	B3-280
		To read:—			
		Gearbox assembly (use B3-629 with 7H 3189)	1	–	B3-280
		Amend the following item:—			
		Gearbox assembly	1	–	B3-151
		To read:—			
		Gearbox assembly (use conversion 58G 384)	1	–	B3-151
		Add the following item after part number B3-151 using the same chassis range:—			
		Conversion gearbox assembly, with clutch plate	1	–	58G 384
		Amend the following item:—			
		Gearbox assembly	1	–	B3-292
		To read:—			
		Gearbox assembly (use B3-267 with 7H 3189)	1	–	B3-292
		Amend the following item:—			
		Gearbox casing	1	–	B3-150
		To read:—			
		Gearbox casing (use conversion 58G 383)	1	–	B3-150
		Add the following item after part number B3-150 using the same chassis range:—			
		Conversion gearbox casing assembly	1	–	58G 383
AUSTIN-HEALEY 100 PARTS LIST, PUBLICATION 1050. Section "Bonnet".	Page 1.	Add the following items:—			
		Bonnet lock support bracket	1	–	14B 1809
		Screws, bracket to dash panel	3	–	51K 2637
		Nuts	3	–	51K 325
		Plain washers	6	–	6K 9695
		Spring washers	3	–	2K 1209
Section "Windscreen".	Page 1.	Add the following items:—			
		Rubber pad for stanchion foot, right hand	1	–	14B 4876
		Rubber pad for stanchion foot, left hand	1	–	14B 4877
Section "Hood".	Page 1.	Add the following items:—			
		Webbing for hood cover	2	–	14B 4825
		Screws, webbing to hood frame	4	–	54K 3014
		Washers	4	–	6K 9062
THE AUSTIN SERVICE JOURNAL, CARS—VOLUME 25. Section "Body".	Page 7.	Amend part number 14B 4781 for Brackets, glass stops, front doors, to read 14G 4781.			

BRAKE PEDAL LEVER

Austin-Healey 100

The brake pedal lever has been strengthened by making an eye at the lower ends of the pedal and push rod levers, and welding all round.

INTERCHANGEABILITY

The new brake pedal lever will be supplied for replacements when stocks of the old ones are exhausted.

STR 1604

SUMMARY OF ALTERATION

Type	Range	Plate	Description	Number per Vehicle	Austin Part Number	Parts List Publication Number
Austin-Healey 100	To E.222780		Brake pedal lever, R.H. Steering	1	1B 8794	Pub. 1050 Controls, p. 4
			Brake pedal lever, L.H. Steering	1	1B 8644	
	E.222781 on		Brake pedal lever, R.H. Steering	1	11B 5102	
			Brake pedal lever, L.H. Steering	1	11B 5101	

FOR YOUR RECORDS	
	PARTS LISTS
	STOCK CARDS
	PARTS ORDERED
	ALTERATIONS NOTED

BRAKE PIPES

Austin-Healey 100

Due to a small modification to the front suspension housing and steering box bracket, new front brake pipes having a slightly different shape have been introduced. There is no change in the part number of the steering box bracket but new part numbers have been allocated to the brake pipes.

INTERCHANGEABILITY

The new pipes can be fitted to existing models by bending the front end to suit.

SUMMARY OF ALTERATION

Description	Number per Vehicle	Old Part	New Part	Parts List Publication Number
Brake pipe, 5-way connection to right hand front brake hose	1	1B 8920	11B 5108	Pub. 1050, Brake Pipes, p.1.
Brake pipe, 5-way connection to left hand front brake hose	1	1B 8921	11B 5110	

Commencing Car/Engine Number – – 223136

FOR YOUR RECORDS	PARTS LISTS
	STOCK CARDS
	PARTS ORDERED
	ALTERATIONS NOTED

Printed in England May 22, 1956

CHECKING HYDRAULIC PRESSURE OF OVERDRIVE UNIT

Austin-Healey 100

Successful operation of the overdrive unit, as fitted to the Austin-Healey 100, depends to a large extent on maintenance of oil pressure and it is essential that this pressure be checked if any repairs have been carried out or the oil emptied from the gearbox and overdrive unit.

To check this oil pressure it is necessary to use 18G 251.

Full instructions as to the procedure to be followed can be found in this Journal, Volume 24, section "Gearbox", page 9, under "Diagnosis and Rectification of Faults".

The adaptor, 7H 5899 mentioned is no longer required, as it is now part of 18G 251.

STR 1570

FOR YOUR RECORDS	PARTS LISTS
	STOCK CARDS
	PARTS ORDERED
	ALTERATIONS NOTED

CHROMIUM PLATED PISTON RINGS

A90, Austin–Healey 100, A125, A135

To increase the life of cylinder bores a new top piston ring, having a chromium plated periphery has been introduced in place of the plain top ring previously used.

INTERCHANGEABILITY

The new parts are interchangeable with their old counterparts and will be supplied for replacements when stocks of the old ones are exhausted.

SUMMARY OF ALTERATION

Description	Number off	Old Part	New Part	Type and Parts List Publication Number
*Pistons with rings and gudgeon pin .	4 or 6	1D 1795	11K 83	A90 Pub. 787, p.5.
*Pistons with rings and gudgeon pin .	4 or 6	1D 1881	11K 84	Austin-Healey 100 Pub. 1050, Engine, p.6.
Piston rings, plain parallel . . .	4 or 6	1D 1797	—	A125 Pubs. 779, p. 4. 430A, p. 4.
Piston rings, chrome, top ring . .	4 or 6	—	11K 85	A135 Pub. 624, p. 4.

* Alternatives.

Commencing Car Engine Numbers :—

Austin-Healey 100 . . . . . 224820 on.

A125, A135 . . . . . 12101 on.

FOR YOUR RECORDS	PARTS LISTS
	STOCK CARDS
	PARTS ORDERED
	ALTERATIONS NOTED

CONNECTING ROD BOLTS AND NUTS

Austin-Healey 100, 16-H.P. Taxi and Hire-Car (Petrol), A125, A135

To increase the working clearance between the connecting rod bolts and the crankcase, thin metal tab washers have been introduced to lock the nuts instead of heavy spring washers. The length of the bolts has been reduced by $\frac{1}{16}$" (1.58 mm.), from $2\frac{13}{16}$" (71.43 mm.) to $2\frac{3}{4}$" (69.85 mm.): the part number of the bolt remains unaltered.

INTERCHANGEABILITY

The tab washers and shortened bolts are interchangeable together. Spring washers must NOT be used with the shortened bolts.

SUMMARY OF ALTERATION

Description	Number per Vehicle	Old Part	New Part	Type and Parts List Publication Number
Spring washers for connecting rod bolts	8	2K 5896	—	16-H.P. Taxi and Hire Car Pub. 1149, Petrol Engine, p. 5. Austin-Healey 100 Pub. 1050, Engine p. 5.
Tab washers for connecting rod bolts	8	—	AEK 126	
Spring washers for connecting rod bolts	12	2K 5896	—	A 125, Pubs. 430A p. 4. 779, p.4. A135, Pub. 624 p. 4.
Tab washers for connecting rod bolts	12	—	AEK 126	

COMMENCING CAR/ENGINE NUMBERS:—

A 125 } - - 10564
A 135 }

Austin-Healey 100 - - } To be published at a later date
16-H.P. Taxi and Hire-Car }

FOR YOUR RECORDS	PARTS LISTS
	STOCK CARDS
	PARTS ORDERED
	ALTERATIONS NOTED

DYNAMO

A70, A90, Austin-Healey 100, 16-H.P. Taxi and Hire-Car, A125, A135

A new dynamo, with a modified rear end cover and oiler has been introduced on all the above models. The rear bearing cover on the new dynamo is $\frac{3}{16}$" (7·144 mm.) longer than the old one, the new dynamo being $10\frac{1}{16}$" (25·87 cm.) overall and the old one $9\frac{13}{16}$" (25·16 cm.).

INTERCHANGEABILITY

The new dynamo is interchangeable with the old one, and will be supplied for replacements when stocks of the old ones are exhausted.

SUMMARY OF ALTERATION

Description	Number Off	Old Part	New Part	Type and Parts List Publication Number
Dynamo . . .	1	3H 1834	11K 100	A70, Pubs. 780A, p.12. 853, p.11. A90, Pub. 787, p.14. Austin-Healey 100, Pub. 1050, Engine, p.17. 16-H.P. Taxi, Pub. 558A, p.12. 16-H.P. Hire-Car, Pub. 728, p.11. 2·2-litre Diesel Taxi, Austin Service Journal, Cars, Vol. 24, Engine, p.44. A125, Pubs. 430A, p.12. 779, p.14. A135, Pub. 624, p.12.

Commencing Car Numbers :

A70 - - - -	To be published at a later date
A90 - - - -	To be published at a later date
Austin-Healey 100 - -	To be published at a later date
16-H.P. Taxi and Hire-Car - - - -	161937
A125 - - - -	To be published at a later date
A135 - - - -	To be published at a later date

FOR YOUR RECORDS	
	PARTS LISTS
	STOCK CARDS
	PARTS ORDERED
	ALTERATIONS NOTED

ENGINE REAR COVER AND REAR PLATE

A70, A90, 16-H.P. Taxi and Hire-Car, 2.2 Litre Taxi Diesel Engine, Austin-Healey 100, A125, A135

To prevent oil leaks the crankcase rear cover is now being dowelled to the crankcase, and the engine rear plate is being screwed to the rear main bearing cap with two setscrews, which pass through holes added to the rear plate and into threaded holes which have been added to the rear main bearing cap.

INTERCHANGEABILITY

The new engine rear plate, rear cover and rear cover joint washer may be used separately for replacements of their old counterparts. The new cylinder block and crankcase may only be used for replacements in conjunction with the new rear plate and setscrews, since the setscrews serve also to plug the threaded holes, which break through into the oil drain channel in the rear main bearing cap. It should be noted that for service purposes on an old engine an alternative to fitting a new rear plate in conjunction with the new cylinder block would be to plug the holes in the rear bearing cap with blanking plugs 11B 290. To facilitate the ordering and supply of spares, new part numbers have been given to the modified cylinder block assemblies; conversion cylinder block assemblies, comprising the modified cylinder block and rear plate together with joint washers and fixing bolts are available to replace the previous cylinder block assemblies. An exception to this is the Taxi Diesel engine in which the engine rear plate has been screwed to the engine rear main bearing cap from the outset of production, thus the modified crankcase with the dowelled rear cover is fully interchangeable and the part number of the cylinder and crankcase assembly remains unaltered.

SUMMARY OF ALTERATION

Description	Old Part	New Part	Type and Parts List Publication Number
Cylinder block with pistons . . .	B3-590	58G 371	A70 Pubs. 780A, pp. 1/3 853, pp. 1/3
Cylinder block with pistons and rear mounting plate to replace B3-590 .	—	58G 373	
Cylinder block with pistons, rear mounting plate and distributor to replace B3-590A	—	58G 372	
Engine rear plate	1B 2842	11B 235	
Cylinder block with pistons . . .	B3-594	58G 370	A90 Pub. 787, pp. 1/3 Austin-Healey 100 Pub. 1050, Engine, p.12
Cylinder block with pistons and rear mounting plate to replace B3-594 .	—	58G 370A	
Cylinder block with pistons, rear mounting plate and distributor to replace B3-594A	—	58G 370B	
Engine rear plate	1B 2842	11B 235	

Continued

FOR YOUR RECORDS	
	PARTS LISTS
	STOCK CARDS
	PARTS ORDERED
	ALTERATIONS NOTED

17. 10

ENGINE REAR COVER AND REAR PLATE—*continued.*

SUMMARY OF ALTERATION—*continued.*

Description	Old Part	New Part	Type and Parts List Publication Number
Cylinder block with pistons . . .	B3–590	58G 371	
Cylinder block with pistons and engine rear plate to replace B3–590 . .	—	58G 377	16-H.P. Taxi, Pub. 558, pp. 1/3.
Cylinder block with pistons, rear engine plate and distributor to replace B3–590A	—	58G 376	16-H.P. Hire-Car, Pub. 728, pp. 1/3.
Engine rear plate	1F 1332	11F 1	
Cylinder block with pistons . .	D2–177	68G 143	A125 Pubs. 779, pp. 1/3. 430A, pp. 1/3.
Cylinder block with pistons and engine rear plate for replacements of D2-177	—	68G 143A	135
Engine rear plate	1D 1340	1D 1966	Pub. 624, pp. 1/3.
Rear cover for crankcase . . .	1K 47	11B 238	A70 Pubs. 780A, p. 3. 853, p. 3. A90
Joint washer for rear cover . . .	1D 1651	11B 239	Pub. 787, p. 3.
Dowels for rear cover . . .	—	11K 131	Austin-Healey 100, Pub. 1050, Engine p. 2,
Setscrews, rear plate to rear main bearing cap	—	2K 5289	16-H.P. Taxi, Pub. 558, p.3.
Spring washers	—	LWN205	16-H.P. Hire-Car, Pub. 728, p. 3. 2·2-litre Diesel Taxi. A125, Pubs. 779, p. 3. 430A, p. 3. A135, Pub. 624, p. 3.

Commencing Car/Engine Numbers :—

A125, A135	12284 on.
Austin-Healey 100 . . . 16-H.P. Taxi . . . 16-H.P. Hire-Car . . . 2·2-litre Diesel Taxi . .	To be published at a later date.
A70, A90	Service purposes only.

FLEXIBLE BRAKE HOSE-REAR

Austin-Healey 100

To protect the rear flexible brake hose from possible chafing against the battery box or shock absorber bracket, the hose is now encased with spring steel armouring, see illustration. The three hoses on the car cease to be identical. The new hose, part number 1B 7483, should be fitted for normal replacements of the rear brake hose. The new hose will be incorporated in the forthcoming reprinted parts list pages for publication 1050.

COMMENCING CAR/ENGINE NUMBER:—227560

STR 1684

FRONT BRAKE HOSES

A90 Six

Referring to the article appearing in this Journal, Volume 25, section Brakes, page 2, it should be noted that the modification was introduced from Car/Engine number 4531.

All cars prior to Car/Engine number 4531 should be examined and converted as previously stated.

FOR YOUR RECORDS	
	PARTS LISTS
	STOCK CARDS
	PARTS ORDERED
	ALTERATIONS NOTED

FRONT BRAKE HOSE BRACKET

Austin-Healey 100

To facilitate assembly, the front brake hose which was formerly secured to a lug integral with the chassis frame, is now secured to a separate bracket which is bolted to the chassis frame (see illustration).

INTERCHANGEABILITY

Replacement chassis frames will be supplied without the bracket which must be ordered separately.

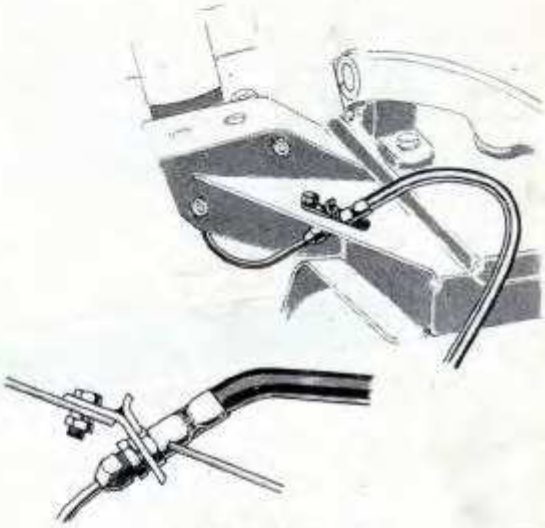

New arrangement. STR 1685

SUMMARY OF ALTERATION

Description	Number per Vehicle	Old Part	New Part	Type and Parts List Publication Number
Front brake hose brackets . . .	2	—	11B 5149	Austin-Healey 100
Bolts, brackets to frame . . .	2	—	HZS 0406	Pub. 1050,
Spring washers	2	—	LWZ 204	Brake Pipes,
Nuts	2	—	FNZ 104	p. 1

FOR YOUR RECORDS	
	PARTS LISTS
	STOCK CARDS
	PARTS ORDERED
	ALTERATIONS NOTED

FRONT BRAKES AND SUSPENSION

Austin-Healey 100

To improve the balance of braking effort and stopping power over various road conditions, the bore diameter of the front wheel hydraulic brake cylinders has been reduced from 1" (25·4 mm.) to $\frac{7}{8}$" (22·23 mm.), thus reducing the amount of braking on the front wheels.

At the same time, the swivel axles and swivel pins are now being made with U.N.F. threads in place of B.S.F. ones, in the interests of standardization.

INTERCHANGEABILITY

The old wheel cylinders may be replaced by the new ones, in sets of four only. *They must not be interchanged separately.* Swivel axles and swivel pins are directly interchangeable provided that the correct nuts and setscrews are used with them. Replacement suspension assemblies, which will have U.N.F. threads, will be supplied with the necessary nuts and setscrews; *Care should be taken when fitting, to see that the right ones are used.*

SUMMARY OF ALTERATION

The new assemblies and components have been incorporated into the Austin-Healey 100 Parts List, Publication Number 1050 by reprinting section " Front Suspension ", pages 1—4.

Commencing Car Engine Number : 221404.

FOR YOUR RECORDS	PARTS LISTS
	STOCK CARDS
	PARTS ORDERED
	ALTERATIONS NOTED

TIMING COVER MODERN OIL SEAL

You can buy exchange timing covers converted to take a modern oil seal, but you can do it reasonably easily yourself.

The seal is 25019337 i.e. 2.5OO” OD x 1.9375” ID x 0.375” W.

First remove the felt seal and retainer soldered to the inside of the cover.

To seal the oil seal to the timing cover I used -

Permatex High-Temp RTV Silicone Gasket Maker - Red, 85g

Pack up the timing cover till it is level.
Coat the inside of the timing cover where the seal will sit with the gasket maker.
Insert the seal, place a weight on the seal and make sure both are level.
Leave overnight for the gasket maker to set.
Solder 3 or 4 seal retainers to the timing cover and fold the ends over the outer rim of the seal.
I made the retainers out of the original felt seal retainer, which is quite soft and easy to fold over the outer rim of the seal with a few light taps of a hammer.
When refitting the timing cover, fit the fan belt pulley into the seal, before tightening the set screws.

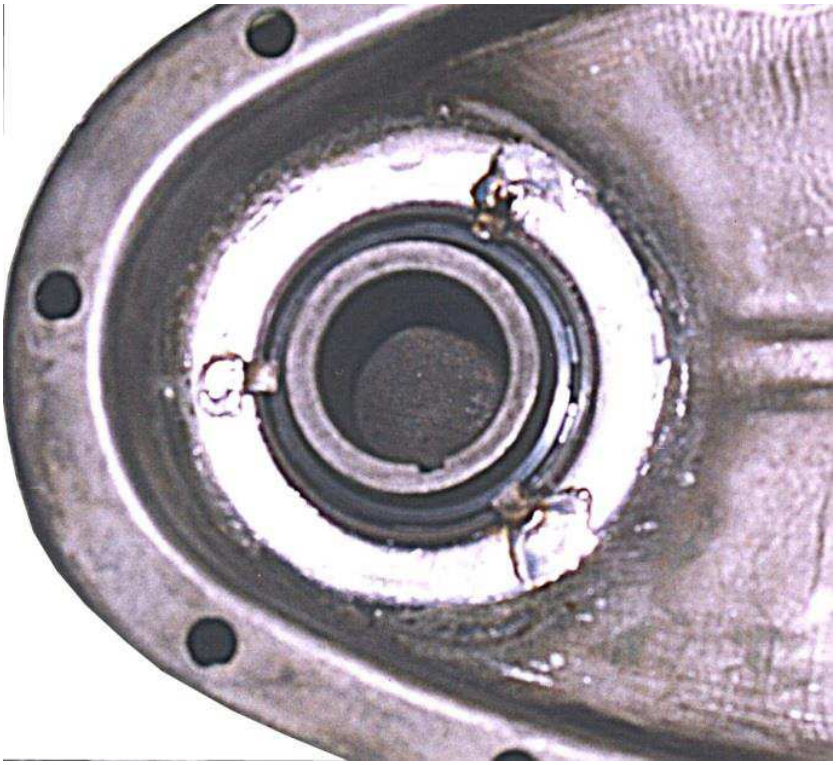

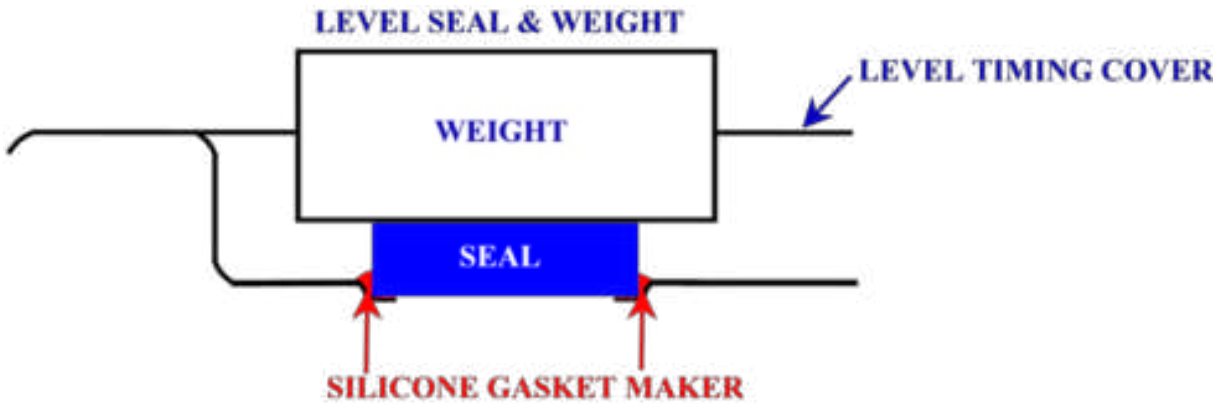

Don Hardie 06/04/2015 healeynut@hotmail.com

FRONT HUB AND BEARINGS

Austin-Healey 100 (BN. 1)

In response to a special demand where cars are to be used for racing, special front hubs are now available to enable taper roller bearings to be fitted. The special front hubs are similar to the original ones, and in cases where machining can be undertaken, modification to the existing hubs is recommended (see illustration). It is necessary to use a special washer of .104" (2.64 mm.) thickness in place of the original one of .092" (2.33 mm.) thickness.

INTERCHANGEABILITY

The special front hubs, taper roller bearings and washer for nut can be fitted together to replace the original ones on cars in the following chassis number range:—138031-228046 except 227505, 227511, 227514, 227536, 227542, 228008, 228026.

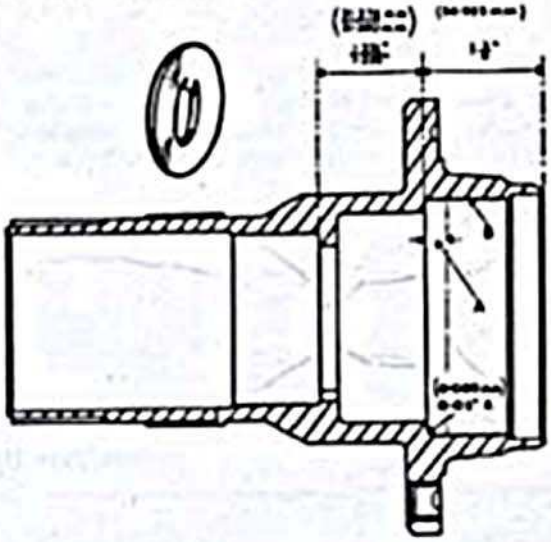

STR 1718

When machining the extra depth A care should be taken not to touch the original surface B.

SUMMARY OF ALTERATION

Description	Number per Vehicle	New Part	Parts List Publication Number
Front hub with studs, less bearings, right hand	1	1B 4393	Pub. 1050, Front Suspension, p. 3.
Front hub with studs, less bearings, left hand	1	1B 4394	
Taper roller bearings, inner . . .	2	1B 4397	
Taper roller bearings, outer . . .	2	1B 4398	
Washers for swivel axle nuts . . .	2	1B 4392	

TIMKIN BEARINGS: -

OUTER – 1330 CUP 1351 CONE

INNER - 2523 CUP 2582 CONE

FOR YOUR RECORDS	
	PARTS LISTS
	STOCK CARDS
	PARTS ORDERED
	ALTERATIONS NOTED

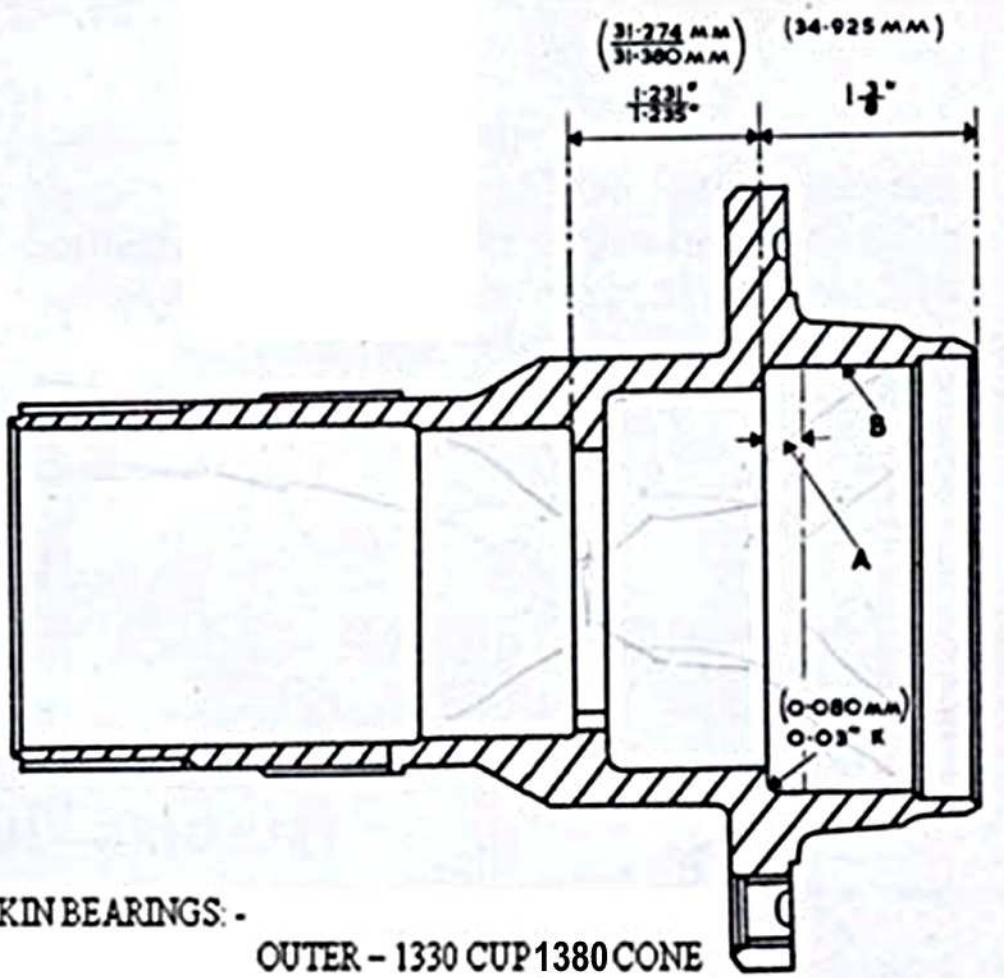

TIMKIN BEARINGS: -

OUTER – 1330 CUP 1380 CONE

INNER - 2523 CUP 2582 CONE

When machining the extra depth A care should be taken not to touch the original surface B.

Online Services

MENU HELP FEED-BACK HOME

TIMKEN

Bearing Selection & Identification by Part & Serial Number Search Results

Bearing Selection Results -1 Parts Selected

	Cone Part Number	Cup Part Number	Cone Bore (in)	Cup OD (in)	Brg Width (in)
1	1351	1330	0.7500	2.0000	0.9375

THE ABOVE CONE WAS TOO WIDE SO 1380 WAS USED AND A 3/4 ID - 7/8 OD BRONZE BUSH WAS USED TO SUIT THE NEW BEARING'S ID

	Cone Part Number	Cup Part Number	Cone Bore (in)	Cup OD (in)	Brg Width (in)
1	1380	1330	0.875	2.0000	**0.7875**

Bearing Selection Results -1 Parts Selected

	Cone Part Number	Cup Part Number	Cone Bore (in)	Cup OD (in)	Brg Width (in)
1	2582	2523	1.2500	2.7500	0.928

ANGULAR CONTACT BALL BEARINGS

OUTER	MJT ¾ or MS8ACD	ID 0.75"	OD 2.00"	W 0.6875"
INNER	LJT 1 ¼" or LS 12ACD	ID 1.25"	OD 2.75"	W 0.8125"

MY CONVERSION TO TIMKENS

I tracked down the Austin recommended bearings at cheapest price on the Internet to Bearing King in the UK. When I got them I found that the outer bearing was 0.25” wider than the original angular contact ball bearing which would have moved the nut out so that the split pin couldn’t be fitted.

I was talking to John Dowsett and he said he fitted a BN2 hub to a BN1 stub axle by using a brass bush to bring the outer end of the stub up to 7/8” from ¾”, so I checked in the Timken catalogue and found a new Cone (1380), with a bore of 7/8”, that would fit the Cup (1330) and reduce the bearing width to only 0.10” wider than the original bearing, which made it possible the fit the split pin. I tracked 2 down to RockAuto in the US. I got 2 bronze bushes (3/4” ID x 7/8” OD x 1¼” Long) from Small Parts & Bearings in Queensland. I tapered the inside of one end bushes to the same angle as the stub axle, the other end I shortened, so when fitted it lined up with the step down to the thread and the outside skimmed down so the bearing cone was a push fit over it, they were then fitted to the stubs using Loctite Super Bearing mount.

To fit the Inner Bearing the hub had to be machined to allow for the wider Timken bearing. The length of the machining from the Austin Service Bulletin is 0.267”.
The bearing spacer’s small end had it’s inside diameter turned out to fit over the bronze bush and the large end shortened to give an overall length of 1.188”.

The bearing cups, lubricated with light oil, were fitted to the hubs and the end play adjusted as per the BJ8 manual with BN2 to early BJ8 shims from AH Spares in the UK.
See https://www.youtube.com/watch?v=RJYIXZtnIiw for a demonstration on an MG B, the Healey adjustment is the same.

The bearings were then removed, packed with wheel bearing grease refitted to the stubs with the shims in place (don’t forget the split pin, awkward but necessary) and the brakes and wheels reinstalled.

You may have to search to get the 1380/1330 cone/cup as a pair or you will have to do as I did and have 2-1351 cones (which aren’t cheap) left over.

Have fun
Don Hardie 13 02 10




HEALEY HUB DIMENSIONS

TIMKEN BEARINGS
INNER 2523 CUP 2582 CONE
OUTER 1330 CUP 1380 CONE

The Austin Service Bulletin quotes the outer bearings as 1330 Cup & 1351 Cone

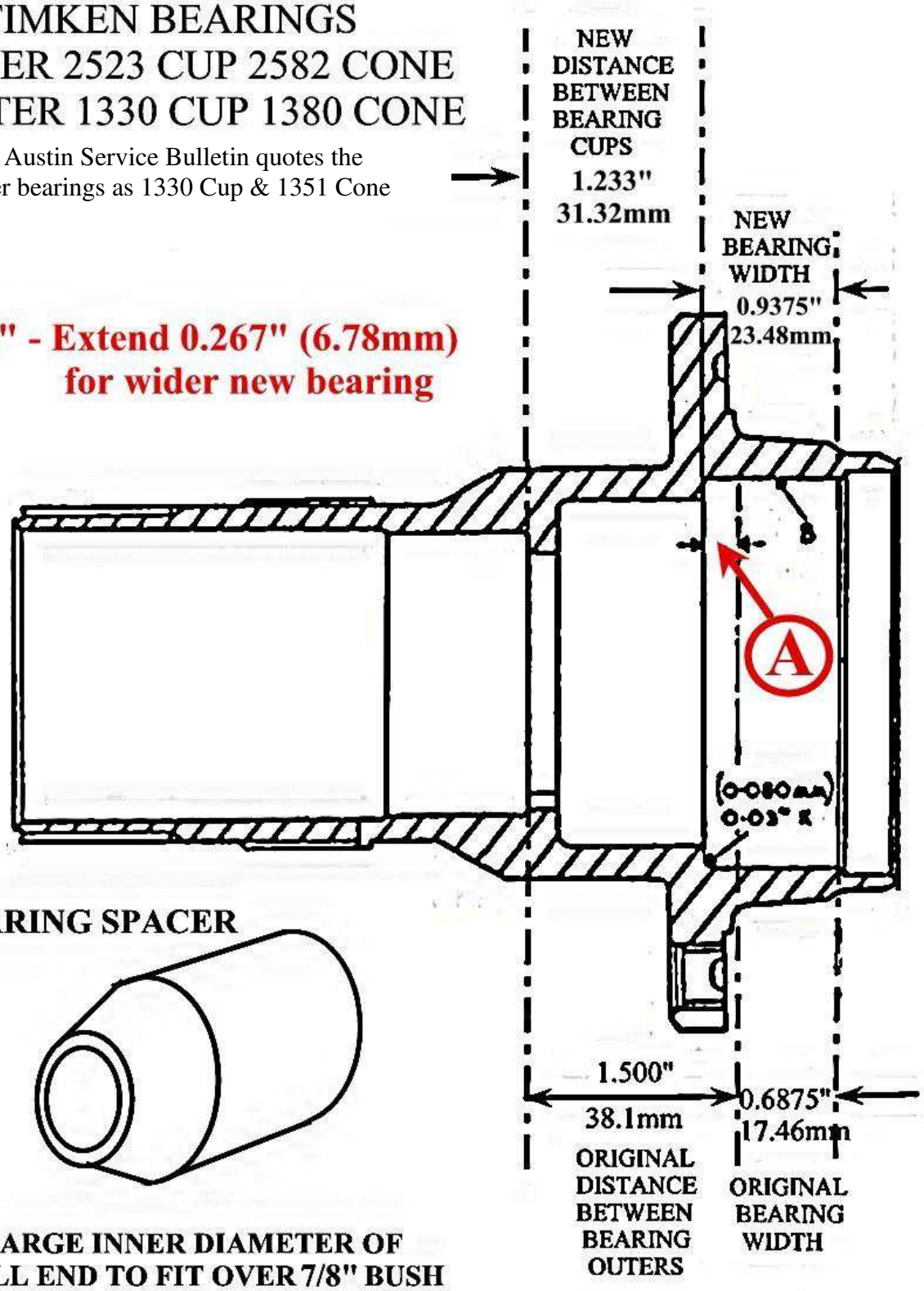

BEARING SPACER

ENLARGE INNER DIAMETER OF SMALL END TO FIT OVER 7/8" BUSH

TRIM LARGE END TO MAKE THE

NEW LENGTH OF SPACER = 1.233" -0.0255"-0.0045"-0.015"= 1.188" or 30.18mm

DISTANCES CONE PROTRUDES PAST CUP **FOR SHIM PRELOAD ADJUSTMENT**

FRONT HUB BEARING ADJUSTMENT

Austin-Healey 100 (BN. 2)

The following procedure should be adopted when adjusting the Austin-Healey 100 front hub taper roller bearings.

Pack the wheel bearings with the proper lubricant. Install the wheel, hub and drum as a unit, tighten the wheel nut with a spanner, whilst rotating the wheel backwards and forwards until there is a noticeable drag or bind. This assures that the bearing cones are properly seated. Back off the spindle end to line up with the nearest cotter pin hole, which will allow the hub to rotate freely, with no perceivable end play. Lock the spindle nut in this position with the cotter pin, and install the hub grease cap.

NOTE: -
The 100 Workshop Manual says that later models have a spacer which must be correctly adjusted. See page 1 of MY CONVERSION TO TIMKENS article above..

Don Hardie

FOR YOUR RECORDS	PARTS LISTS
	STOCK CARDS
	PARTS ORDERED
	ALTERATIONS NOTED

FRONT SHOCK ABSORBERS

A 40, A 50, A 70, A 90, Austin-Healey 100

New front shock absorber arms with repositioned clamping bosses have been introduced to enable the present type shock absorbers, which are used on the A 40/A 50 and A 90 Six, to be used for service purposes on earlier A 40, A 70, A 90, and Austin-Healey models. The internal components and valve settings of the shock absorbers remains unaltered.

INTERCHANGEABILITY

Shock absorbers with the new body and arms will be supplied for replacements when stocks of the old ones are exhausted. The shock absorber (fitted with the new arms) which is used on the A 40/50 Saloons and Commercial vehicles is suitable for use on all earlier A 40 models (Saloons and Commercials). The shock absorber used on the A 90 Six (BS.4) is suitable for use on all A 70 Saloons and Commercial Vehicles and the A 90 (BD.2, BE.2) models. The A 90 Six type shock absorber, with suitable valve setting, is used on the Austin-Healey 100.

SUMMARY OF ALTERATION

Description	Number per Vehicle	Old Part	New Part	Type and Parts List Publication Number
Front shock absorbers with arms . . . Clamping bolts for plain arms . . .	2 2	1G 4488 HBN 0615	1G 4508 HBN 0616	A 40, Pub. 1099, Front Suspension, p.1.
Front shock absorbers with arms . . . Clamping bolts for plain arms . . .	2 2	3H 2915 2K 8785	1G 4458 HBN 0616	A 70, Pubs. 730, p. 32, 603A, p. 40. A 90 Pub. 787, p. 40.
Front shock absorbers with arms . . . Clamping bolts for plain arms . . .	2 2	1B 4347 2K 8785	1G 4458 HBN 0616	A 70, Pubs. 780A, p. 36, 835, p. 33.
Front shock absorbers with arms (Saloons) Front shock absorbers with arms (Commercial vehicles)	2 2	1G 4472 1G 4488	1G 4508 1G 4508	A 40/50, Pub. 1099A, Front Suspension, p. 1.
Front shock absorbers with arms . . .	2	1B 4367	1G 4458	A 90 Six
Front shock absorbers with arms . . .	2	1B 4403	1B 4459	Austin-Healey 100, Pub. 1050, Front Suspension, p. 1.

COMMENCING CAR ENGINE NUMBERS:—

A 40 (GV.5, GP.5, GQU.5) – – 38157

A 40/A 50 (GS.5, HS.5) – – } To be published at a later date.
A 90 (BS.4) – – – –
Austin-Healey 100 – – –

A 70 – – – – – – } Service purposes only.
A 90 (BD.2, BE.2) – – –

Printed in England, November 9, 1955

69

FRONT SPRING SEAT FIXING

A90 Six, Austin-Healey 100

To obviate the possibility of the bolt head pulling through the spring seat, longer bolts have been introduced together with a plain washer, which is fitted under the bolt head, and a spring washer fitted under the nut. In the case of the Austin-Healey 100 the bolt should be assembled with the head adjacent to the front spring seat.

INTERCHANGEABILITY

The new and old parts are only interchangeable in sets.

SUMMARY OF ALTERATION

Description	Number per Vehicle	Old Part	New Part	Type and Parts List Publication Number
Bolts, spring seats to lower links	8	HBN 0616	HBZ 0618	A90 Six Pub. 1207 Front Suspension, p. 2.
Washers for bolts	8	—	PWZ 106	
Spring washers	8	—	LWZ 106	
Shakeproof washers	8	2K 7131	—	
Bolts, spring seats to links	4	2K 8558	HBZ 0618	Austin-Healey 100 Pub. 1050 Front Suspension, p. 2.
Bolts, seats and anti-roll bar plates to links	4	2K 5675	HBZ 0620	
Nuts for bolts	8	2K 7917	LNZ 206	
Washers for bolts	8	—	PWZ 106	
Spring washers	8	—	LWZ 106	
Shakeproof washers	8	2K 7131	—	

Commencing Car/Engine Numbers :—

Austin-Healey 100 - - 230660

A90 Six - - - 21467

FOR YOUR RECORDS	
	PARTS LISTS
	STOCK CARDS
	PARTS ORDERED
	ALTERATIONS NOTED

Printed in England May 22, 1956

72

GEARBOX MOUNTINGS

Austin-Healey 100

A new rubber mounting is now being used for the overdrive, which gives greater control of both compression and tension loads. At the same time, the packing piece has been eliminated from under the mounting and the thread changed from B.S.F. to U.N.F.

INTERCHANGEABILITY

The new parts can be used together to replace the old ones.

SUMMARY OF ALTERATION

The new parts have been incorporated in the Austin-Healey 100 Parts List, Publication 1050, by reprinting section " Gearbox ", page 7.

Commencing Car Number : 221012.

FOR YOUR RECORDS	
	PARTS LISTS
	STOCK CARDS
	PARTS ORDERED
	ALTERATIONS NOTED

GEARBOX

Austin-Healey 100

To make engagement of reverse gear easier, the detent angle of the reverse check plunger for the cross shaft has been increased from 40° to 50° to provide less resistance and the length reduced by $\frac{1}{16}$" (1·58 mm.) to decrease the spring load.

INTERCHANGEABILITY

The new part may be fitted in place of the old one.

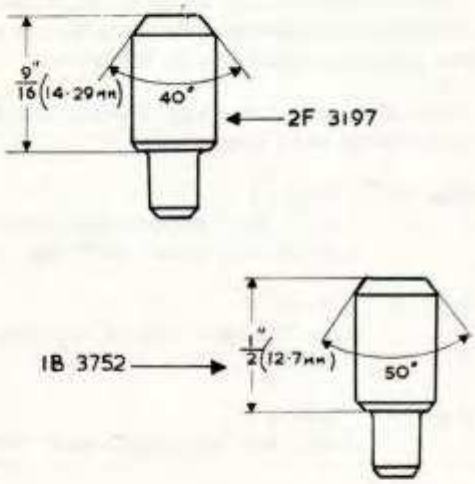

STR 1823

SUMMARY OF ALTERATION

Description	Number per Vehicle	Old Part	New Part	Parts List Publication Number
Reverse check plunger for cross shaft	1	2F 3197	1B 3752	Pub. 1050, Gearbox, p. 2.

COMMENCING CAR/ENGINE NUMBER 229207

HYDRAULIC PRESSURE GAUGE FOR OVERDRIVE UNIT

Austin-Healey 100

TOOL NUMBER - - - 18G 251
WEIGHT - - - - - - 2 lb.

This equipment consists of a pressure gauge, reading to 800 lb. per square inch A, a reinforced hose pipe B, two connector unions C and a thick copper washer D.

The copper washer ensures a leak proof joint between the union and overdrive connection.

Full details as to the use of this pressure gauge will be found in this Journal, Volume 24, section "Gearbox", page 9, and Volume 25, section "Gearbox", page 3.

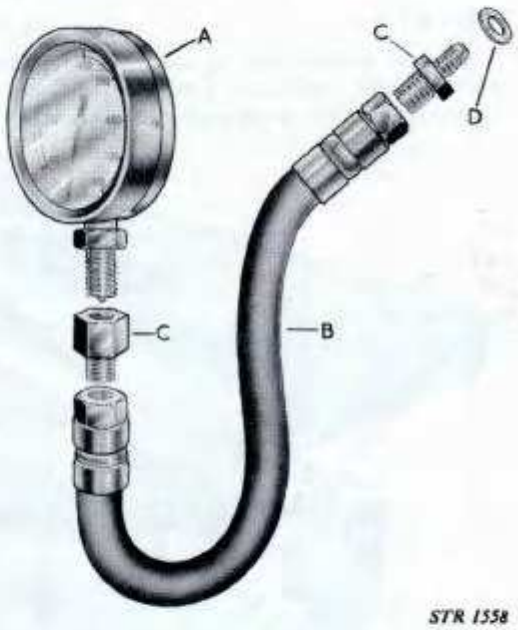

STR 1558

FOR YOUR RECORDS	PARTS LISTS
	STOCK CARDS
	PARTS ORDERED
	ALTERATIONS NOTED

INTERCHANGEABLE PARTS

The following parts have been superseded by new ones of modified design or material. These parts are interchangeable with their old counterparts and will be supplied for replacements when stocks of the old ones are exhausted.

Description	Old Part	New Part	Type and Parts List Publication Number
Clutch operating shaft, R.H. Steering . . . . Clutch withdrawal fork	1B 3318 1B 3311	1B 3699 1B 3509	A 70 Pub. 780A, p. 22.
Remarks: For Service purposes only.			

Description	Old Part	New Part	Type and Parts List Publication Number
Clutch operating shaft, R.H. Steering . . . . Clutch withdrawal fork	1B 3318 1B 3311	1B 3699 1B 3509	Austin-Healey 100 Pub. 1050 Controls, p. 3.
Remarks: Correction, old parts never fitted.			

Description	Old Part	New Part	Type and Parts List Publication Number
Oil strainer	1B 2413	11B 144	A 70 Pubs. 780A, p. 9. 853, p. 8. Austin-Healey 100 Pub. 1050, Engine, p. 8. A 125 Pubs. 403A, p. 9. 779, p. 10. A 135 Pub. 624, p. 8. 16-H.P. Taxi Pub. 558A, p. 10. 16-H.P. Hire-Car Pub. 728, p. 9.
Remarks: Modified design to facilitate manufacture.			

Continued

FOR YOUR RECORDS	
	PARTS LISTS
	STOCK CARDS
	PARTS ORDERED
	ALTERATIONS NOTED

INTERCHANGEABLE PARTS

The following parts have been superseded by new ones of modified design or material. These parts are interchangeable with their old counterparts and will be supplied for replacements when stocks of the old ones are exhausted.

Description	Old Part	New Part	Type and Parts List Publication Number
Lifting jack with handle	3H 1532	11B 5152	Austin-Healey 100, Pub. 1050, Tools, p. 1.
Remarks: Standardisation of lifting jacks.			

AMENDMENTS TO LITERATURE

A 40/A 50 PARTS LIST, PUBLICATION 1099A, Section "Body Shell".

Page 2.

Delete the following item:—
Valance top closing plate assembly, left hand - - 1 - 4G 3071
Add the following items:—
Valance top closing plate, right hand - - - 1 - 14G 2681
Valance top closing plate, left hand - - - 1 - 14G 2682
Remarks: 14G 2682 can be used for replacements of 4G 3071.

THE AUSTIN SERVICE JOURNAL, CARS—VOLUME 24, Section "Engine".

Page 50.

Amend part number 11B 285 for Clamps, small, for fuel pipes to read 11B 283.
Remarks: Correction of printing error.

FOR YOUR RECORDS	PARTS LISTS
	STOCK CARDS
	PARTS ORDERED
	ALTERATIONS NOTED

INTERCHANGEABLE PARTS—*continued*

Description	Old Part	New Part	Type and Parts List Publication Number
Selector lever, outer R.H. Steering . . . Selector lever, outer L.H. Steering . . . Operating lever, outer R.H. Steering . . . Operating lever, outer L.H. Steering . . .	AEC 3213 AEC 3215 AEC 3214 AEC 3216	AEC 3227 AEC 3229 AEC 3228 AEC 3230	A 90 Pub. 1207, Gearbox, pp. 1/2
Remark:— Improved material specification.			

Description	Old Part	New Part	Type and Parts List Publication Number
Fan (six-bladed)	11B 272	11K 258	A 125 Pubs. 430A, p. 12. 779, p. 14. A 135 Pub. 624, p. 12.
Remarks:— Modification of the fan spider and hub to facilitate production.			

Description	Old Part	New Part	Type and Parts List Publication Number
Reverse light switch on gearbox	2H 2272	11G 3062	A 125 Pubs. 430A, p. 6. 779, p. 68. A 135 Pub. 624, p. 13.
Overdrive switch on gearbox (to limit overdrive on 2nd and top gears).	2H 2272	11G 3062	Austin-Healey 100 Pub. 1050, Electrical, p. 2.
Remarks:— Improved type of switch.			

INTERCHANGEABLE PARTS

The following parts have been superseded by new ones of modified design or material. These parts are interchangeable with their old counterparts and will be supplied for replacements when stocks of the old ones are exhausted.

Description	Old Part	New Part	Type and Parts List Publication Number
Bolt for clutch withdrawal lever . . .	2A 3081	2A 3289	A 30 Pub. 883B, Controls, p. 2.
Bolt for clutch withdrawal lever . . .	1G 3583	11G 3145	A 40/A 50 Pub. 1099B, Controls, p. 3. Nash Metropolitan, Pub. 9048, Series II Controls, p. 7.
Remarks: Improved material specification to reduce wear.			

Description	Old Part	New Part	Type and Parts List Publication Number
Crankshaft with oil resetrictors and bush for first motion shaft	1B 1456	11B 345	A 70 Pubs. 603A, p. 8. 780A, p. 7. 730, p. 7. 853, p. 6. A 90 Pub. 787, p. 8. Austin-Healey 100 Pub. 1050, Engine, p. 4. 16-H.P. Taxi and Hire-Car Pub. 1149, Engine, p. 4.
Remarks: Depth of bore for first motion shaft bush increased to ensure sufficient clearance for end of first motion shaft.			

FOR YOUR RECORDS	
	PARTS LISTS
	STOCK CARDS
	PARTS ORDERED
	ALTERATIONS NOTED

INTERCHANGEABLE PARTS

The following parts have been superseded by new ones of modified design or material. These parts are interchangeable with their old counterparts and will be supplied as replacements when stocks of the old ones are exhausted.

Description	Old Part	New Part	Type and Parts List Publication Number
Water pump seal	3H 2838	11G 162 or 11G 175	A 30, Pub. 883B, Engine, p. 14. A 40/A 50 Pub. 1099B, A 40 Engine, p. 14 A 50 Engine, p. 14. Nash Metropolitan, Pub. 9048, Series 2 Engine, p. 13.
Remarks: Improved design of seal, two alternative types in use.			

Description	Old Part	New Part	Type and Parts List Publication Number
Bushes for shackle pins	1A 9221	1G 9800	A 40/A 50 Pub. 1099B, Rear Suspension, p. 1. A 90 Six, Pub. 1207, Rear Suspension, p. 1. Austin-Healey 100, Pub. 1050, Rear Suspension, p. 1.
Remarks: Bush now manufactured from sintered iron and copper instead of phospher bronze.			

Description	Old Part	New Part	Type and Parts List Publication Number
Bracket for air strangler control . . .	4B 8596	11G 2123	A 40/A 50, Pub. 1099B, Electrical, p. 3.
Remarks: Commonisation.			

Continued

FOR YOUR RECORDS	PARTS LISTS
	STOCK CARDS
	PARTS ORDERED
	ALTERATIONS NOTED

AUSTIN-HEALEY 100 MODIFICATIONS

Gearbox and Front Suspension

(Reprint of Stop Press No. 6)

The design and performance of the Austin-Healey 100 has been improved by the introduction of a new close ratio four-speed gearbox and new front suspension with larger brakes. The general appearance of the car remains unaltered, and to distinguish the latest version from the earlier BN.1 the symbol BN.2 is used to prefix the car serial number. The new gearbox which has four speeds and reverse is basically the same as the unit already used so successfully on the A 90 Six Westminster, but with Laycock de Normanville overdrive and a central gear change lever. Overdriving is entirely at the discretion of the driver and can be done in third or top gear by simply operating a small switch on the instrument panel. There is no speed controlled centrifugal switch to limit the use of overdrive, so that 6 gears are available for normal use. The ratios are:—

1st – – – –	3.077 to 1.
2nd – – – –	1.913 to 1.
3rd – – – –	1.333 to 1.
3rd overdriven – –	1.034 to 1.
4th – – – –	1.000 to 1.
4th overdriven – –	0.777 to 1.

Larger front brake shoes, 11" × 2¼" (27.94 cm. × 5.7 cm.) have been introduced to improve the braking power. All four wheels now have 11" × 2¼" (27.94 cm. × 5.7 cm.) brakes with special anti-fade linings to match the high performance of this car. New front hubs with taper roller bearings ensure a long service life even when the car is cornered fast continuously.

The BN.2 incorporates all of the improvements already made to its predecessor the BN.1, and the car serial numbers continue in numerical sequence.

SUMMARY OF ALTERATION

The new assemblies and components have all been incorporated into the Austin-Healey 100 Parts List, Publication 1050. The pages affected are being reprinted and will be available shortly.

COMMENCING CAR/ENGINE SERIAL NUMBER:—
228047 on, *and* 227505, 227511, 227514, 227536, 227542, 228008, 228026.

OIL FILTER SETSCREWS

Austin-Healey 100

To facilitate production longer setscrews are now used for fixing the oil filter adaptor.

SUMMARY OF ALTERATION

Description	Number per Vehicle	Old Part	New Part	Parts List Publication Number
Setscrews, adaptor to oil filter . .	2	2K 3174	2K 3175	*Pub. 1050, Engine, p. 16.

* See also this Journal, Volume 24, Engine, page 25.

COMMENCING ENGINE CAR NUMBER:—228079

FOR YOUR RECORDS	PARTS LISTS
	STOCK CARDS
	PARTS ORDERED
	ALTERATIONS NOTED

OIL FOR REAR AXLE

A40 (GV.5, GP.5) Austin-Healey 100

With the recent change over, from Spiral bevel gears to Hypoid ones, it is important to note that the recommended oils for Hypoid gears are different from those previously recommended for the same vehicles when fitted with Spiral bevel gears. A full list of recommended axle lubricants is given below.

DUCKHAMS	VACUUM	SHELL	WAKEFIELD	ESSO	B.P.
Duckhams Hypoid 90	Mobilube GX90	Spirax 90 E.P.	Castrol Hypoy	Esso Expee Compound 90	Energol Transmission Oil E.P. S.A.E. 90

Commencing Car Numbers :

A40 (GV.5) - - - -	C.E. 2G 136.
A40 (GP.5) - - - -	C.E. 2G 115.
Austin-Healey 100 - - -	C.E. 221536 on.

BN1. 4 STUD DIFF Shell Spirax EP 140
Castrol. Hipress
Caltex thuban EP.140
1986- VALVOLINE 85-140 EP

BN1. GBOX - VALVOLINE SUPER ARA. 290.
OR SAE 50. Mineral-Motor oil.

FOR YOUR RECORDS	
	PARTS LISTS
	STOCK CARDS
	PARTS ORDERED
	ALTERATIONS NOTED

OVERDRIVE UNIT

Austin-Healey 100

Further investigation of instances of Austin-Healey 100 overdrives failing to operate has shown the cause to be due to a short circuit between the terminals of the centrifugal switch and the gearbox cover panel.

This fault has now been rectified by the introduction of a modified cover panel " A " with a raised hemispherical portion " B " directly above the switch " C ".

Where this fault is present on older vehicles it is permissible to remove the cover panel and with a suitable tool carefully raise a small portion of the panel to a " dome " shape in a position immediately above the head of the switch.

Finally the cover panel should be refitted as far over to the left-hand side of the overdrive (away from the centrifugal switch) as the fixing holes will allow.

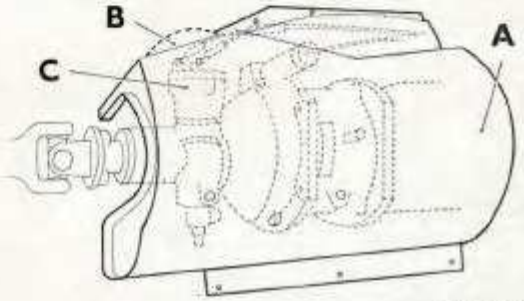

STR 1579

Commencing Body Number - - 3245

FOR YOUR RECORDS	
	PARTS LISTS
	STOCK CARDS
	PARTS ORDERED
	ALTERATIONS NOTED

PART NUMBER CHANGES

The following items have been allocated new part numbers for record purposes. New part numbers should be quoted on all future orders.

Old Part Number	New Part Number	Old Part Number	New Part Number	Old Part Number	New Part Number
ALT-1	8G500	ALT-51	8G547	ALT-90	8G583
ALT-3	8G502	ALT-52	8G548	ALT-91	8G584
ALT-4	8G503	ALT-54	8G549	ALT-96	8G589
ALT-5	8G504	ALT-55	8G550	ALT-97	8G590
ALT-10	8G507	ALT-56	8G551	ALT-98	8G591
ALT-12	8G509	ALT-57	8G552	ALT-99	8G592
ALT-14	8G511	ALT-59	8G554	ALT-100	8G593
ALT-18	8G515	ALT-60	8G555	ALT-101	8G594
ALT-19	8G516	ALT-61	8G556	ALT-102	8G595
ALT-21	8G518	ALT-64	8G557	ALT-103	8G596
ALT-22	8G519	ALT-67	8G560	ALT-104	8G597
ALT-24	8G521	ALT-68	8G561	ALT-105	8G598
ALT-25	8G522	ALT-69	8G562	ALT-110	8G600
ALT-28	8G525	ALT-70	8G563	ALT-111	8G601
ALT-29	8G526	ALT-71	8G564	ALT-112	8G602
ALT-30	8G527	ALT-72	8G565	ALT-113	8G603
ALT-31	8G528	ALT-73	8G566	ALT-120	8G610
ALT-33	8G530	ALT-74	8G567	ALT-121	8G611
ALT-34	8G531	ALT-75	8G568	ALT-123	8G613
ALT-35	8G532	ALT-76	8G569	ALT-124	8G614
ALT-36	8G533	ALT-77	8G570	ALT-125	8G615
ALT-37	8G534	ALT-78	8G571	ALT-126	8G616
ALT-38	8G535	ALT-79	8G572	ALT-127	8G617
ALT-39	8G536	ALT-80	8G573	ALT-128	8G618
ALT-40	8G537	ALT-82	8G575	ALT-129	8G619
ALT-41	8G538	ALT-83	8G576	ALT-130	8G620
ALT-42	8G539	ALT-84	8G577	ALT-131	8G621
ALT-45	8G542	ALT-85	8G578	ALT-132	8G622
ALT-46	8G543	ALT-86	8G579	ALT-134	8G624
ALT-48	8G544	ALT-87	8G580	ALT-135	8G625
ALT-49	8G545	ALT-88	8G581	ALT-136	8G626
ALT-50	8G546	ALT-89	8G582		

FOR YOUR RECORDS	
	PARTS LISTS
	STOCK CARDS
	PARTS ORDERED
	ALTERATIONS NOTED

PLANET CARRIER

Austin-Healey 100

To facilitate production the design of the planet carrier cage has been changed from composite to solid construction, thus dispensing with the front and middle thrust washers. The part number of the annulus assembly with sun wheel, planet carrier and wheels 28 % ratio, 17H 5802, remains unchanged.

INTERCHANGEABILITY

Is not affected but care must be taken to ensure that only the thrust washer supplied with the assembly is used and not three as before.

SUMMARY OF ALTERATION

Range	Plate Number	Description	Number per Vehicle	Part Number	Parts List Publication Number
To 28/1292/1–9492 and To 22/1312/1–36*	CA.3 CA.4 CA.5	Thrust washer phosphor bronze, for planet carrier front . . Thrust washer steel, middle . Thrust washer phosphor bronze, rear	1 1 1	7H 5875 7H 5876 7H 5877	Pub. 1050, Gearbox and Overdrive, p.6.
28/1292/9493 onward and 22/1312/37 onward	CA.5	Thrust washer phosphor bronze	1	7H 5877	

* 28/1292/1–9492 are the serial numbers of 1B 3691 (Standard Equipment)
22/1312/1–36 are the serial numbers of 7H 1735 (Special fitting only)

FOR YOUR RECORDS	
	PARTS LISTS
	STOCK CARDS
	PARTS ORDERED
	ALTERATIONS NOTED

REAR AXLE AND BRAKES

Austin-Healey 100

The spiral bevel rear axle with 11" × 1¾" (27·94 cm. × 4·44 cm.) rear brakes has now been superseded by a Hypoid rear axle having 11" × 2¼" (27·94 cm. × 5·7149 cm.) rear brakes, which is similar to that used on the A90 "Six" Westminster. To make this change possible it has been also necessary to fit new rear springs and shock absorbers, and a shorter propeller shaft. Some of the first cars to be fitted with the new axle had B.S.F. nuts for the hub extensions, but these were subsequently changed to U.N.F. The shock absorber and propeller shaft securing bolts have also been changed from B.S.F. to U.N.F. threads.

INTERCHANGEABILITY

None of the new parts can be interchanged with the old ones.

SUMMARY OF ALTERATION

The new assemblies and components have been incorporated into the Austin-Healey 100 Parts List, Publication 1050. This has been done by reprinting section Rear Axle, pages 1—4, the issue of section Rear Axle, pages 5—6, reprinting section Controls, page 5, Brake Pipes, pages 1—2, Rear Suspension, pages 1—2, Propeller Shaft, page 1, together with five new illustrations, plates DC, DE, DD, DF and DG.

Commencing Car Engine Number : 221536.

FOR YOUR RECORDS	
	PARTS LISTS
	STOCK CARDS
	PARTS ORDERED
	ALTERATIONS NOTED

Printed in England May 9, 1955

REAR AXLE

A90 Six, Austin-Healey 100

To improve design the rear hub locknuts are now threaded left and right hand instead of both being right hand threads as before. At the same time to improve accessibility the oil filler plug has been moved from the gear carrier to the rear of the axle casing.

INTERCHANGEABILITY

The rear axle assemblies and rear axle case, with hub locknuts, are interchangeable. The gear carrier assemblies are *not* interchangeable because should a new gear carrier be fitted to an old axle case, there will be no filler plug. The new lockwashers are not interchangeable.

The new axle assemblies and axle cases will be supplied for all replacements, when old stocks are exhausted.

The old gear carriers will continue to be available.

SUMMARY OF ALTERATION

Description	Number per Vehicle	Old Part	New Part	Type and Parts List Publication Number
Rear axle assembly, 10/41 ratio with brakes and hubs	1	ATC 7018	ATC 7027	Austin-Healey 100 Pub. 1050, Rear Axle, pp. 4/5
Rear axlecase with studs (use ATC 7315)	1	ATC 7238	—	
Rear axle case with studs for gear carrier, right hand and left hand thread bearing locknuts and lockwashers. (To service ATC 7238 only)	1	—	ATC 7315	
Rear axle case with studs for gear carrier	1	—	ATC 7286	
Nuts for ball journal bearing, right hand thread	2	ATC 7062	—	
Lockwashers	2	ATC 7063	—	
Nut for ball journal bearing, right hand thread	1	—	ATC 7062	
Nut for ball journal bearing, left hand thread	1	—	ATC 7309	
Lockwashers	2	—	ATC 7310	
Gear carrier with differential case and gears 10/41 ratio	1	ATC 7078	ATC 7289	

Continued

FOR YOUR RECORDS	
	PARTS LISTS
	STOCK CARDS
	PARTS ORDERED
	ALTERATIONS NOTED

REAR AXLE—*continued*

SUMMARY OF ALTERATION

Description	Number per Vehicle	Old Part	New Part	Type and Parts List Publication Number
Gear carrier only with bearing caps	1	ATC 7201	ATC 7288	Austin-Healey 100 Parts List Pub. 1050, Rear Axle, pp. 4, 5
Stud for bearing cap	1	51K 886	—	
Bolts for bearing caps	3	ATC 7083	—	
Bolts for bearing caps	4	—	ATC 7083	
Oil filler plug in gear carrier	1	ADP 112	—	
Oil filler plug in rear axle case cover	1	—	6K 499	
Rear axle assembly, R.H. Steering	1	1B 7432	ATC 7028	A90 Six Pub. 1207, Rear Axle pp. 1, 2
Rear axle assembly, L.H. Steering	1	1B 7433	ATC 7029	
Rear axle case with bolts for gear carrier (use ATC 7314)	1	ATC 7214	—	
Rear axle case with bolts for gear carrier, right hand and left hand bearing locknuts and lockwashers (To service ATC 7214 only)	1	—	ATC 7314	
Rear axle case with bolts for gear carrier	1	—	ATC 7284	
Nuts for ball journal bearings, right hand thread	2	ATC 7062	—	
Lockwashers	2	ATC 7063	—	
Nut for ball journal bearing, right hand thread	1	—	ATC 7062	
Nut for ball journal bearing, left hand thread	1	—	ATC 7309	
Lockwashers	2	—	ATC 7310	
Gear carrier with differential case and gears	1	1B 7410	ATC 7290	
Gear carrier with bearing caps	1	ATC 7201	ATC 7288	
Stud for differential bearing	1	51K 886	—	
Bolts for differential bearing caps	3	ATC 7083	—	
Bolts for differential bearing caps	4	—	ATC 7083	
Oil filler plug on gear carrier caps	1	ADP 112	—	
Lockwashers	1		6K 499	

COMMENCING CAR ENGINE NUMBERS :—A90 Six—9965.
Austin-Healey 100—228012.

REAR SPRING SHACKLE PINS

Austin-Healey 100

The threads on the shackle pins and nuts have been changed from B.S.F. to U.N.F. The part numbers of the washers have been changed from Austin to B.M.C. standard parts.

INTERCHANGEABILITY

The U.N.F. shackle pins will be supplied for replacements when stocks of the B.S.F. ones are exhausted. Care must be taken to see that the correct U.N.F. nuts are used with them.

SUMMARY OF ALTERATION

Description	Number Off	Old Part	New Part	Type and Parts List Publication Number
Rear spring shackle pins, bottom	2	1A 9224	1G 9320	Austin-Healey 100 Pub. 1050 Rear Suspension, 1
Spring washers	4	2K 5863	LWZ 206	
Nuts	2	2K 3977	FNZ 106	
Locknuts	4	2K 3986	FNZ 206	
Rear spring pins, top and front	4	1G 5672	1G 9321	
Washers	2	2K 1205	PWZ 107	
Spring washers	4	2K 5861	LWZ 207	
Nuts	4	2K 3978	FNZ 107	

Commencing Car Number: 223220.

FOR YOUR RECORDS	PARTS LISTS
	STOCK CARDS
	PARTS ORDERED
	ALTERATIONS NOTED

RECOMMENDED LUBRICANTS
1955

Since the publication of Recommended Lubricants (see this Journal, Volume 24, Section "Repairs Data", pages 35–41) certain changes have occurred necessitating this reprinted revised list.

A 30, A 40 (Series 5), A 50, A 90 "Six", Austin-Healey 100, A 125, A 135.

		B.P.	Duckham's	Esso	Shell	Vacuum	Wakefield
Engine	Above 32° F.	Energol Motor Oil S.A.E. 30	Duckham's "Nol Thirty"	Essolube 30	X-100 30	Mobiloil A	Castrol XL
	32° F. down to 10° F.	Energol Motor Oil S.A.E. 20W	Duckham's "Nol Twenty"	Essolube 20	X-100 20/20W	Mobiloil Arctic	Castrolite
	Below 10° F.	Energol Motor Oil S.A.E. 10W	Duckham's "Nol Ten"	Essolube 10	X-100 10W	Mobiloil 10W	Castrol Z
Transmission		Energol Motor Oil S.A.E. 30	Duckham's "Nol Thirty"	Essolube 30	X-100 30	Mobiloil A	Castrol XL
(*a*) **Rear Axle and Steering Box**		Energol Transmission Oil E.P. S.A.E. 90	Duckham's Hypoid 90	Esso Expee Compound 90	Spirax 90 E.P.	Mobilube GX.90	Castrol Hypoy
(*b*) **Oil Nipples**		Energol Transmission Oil E.P. S.A.E. 140	Duckham's Nol E.P.T. 140	Esso Expee Compound 140	Spirax 140 E.P.	Mobilube GX-140	Castrol Hi-Press
Front Wheel Hubs Rear Hubs (A125/135 only)		Energrease L3	Duckham's H.B.B. Grease	Esso Grease	Retinax A	Mobil Hub Grease	Catrolease Heavy
Distributor and Oil Can		Energol Motor Oil S.A.E. 20W	Duckham's "Nol Twenty"	Esso Handy Oil	X-100 20/20W	Mobil Handy Oil	Wakefield Oilit
Upper Cylinder Lubrication		Energol U.C.L.	Duckham's Adcoids	Esso Upper Cylinder Lubricant	Donax U	Mobil Upper Lube	Wakefield Castrollo

(*a*) **Rear Axle and Steering**: For temperatures below 10° F. use S.A.E. 80 Hypoid Lubricant.
(*b*) **Oil Nipples**: For high temperature climates the grease as shown for hubs can be used.

Hydraulic Brakes: A 30, A 125, A 135 use Lockheed Brake Fluid.
A 40 (Series 5), A 50, A 90 "Six", Austin-Healey 100 use Girling Brake Fluid (Crimson).

Hydraulic Clutch: A 40 (Series 5), A 50, A 90 "Six", use Girling Brake Fluid (Crimson).

Shock Absorbers: Use Armstrong's Super (thin) Shock Absorber Oil.

Jacking System: A 125, A 135, use Smith's "Red Jackall" Fluid.

16-H.P. TAXI AND HIRE-CAR

		B.P.	Duckham's	Esso	Shell	Vacuum	Wakefield
Petrol Engine	Above 32° F.	Energol Motor Oil S.A.E. 30	Duckham's "Nol Thirty"	Essolube 30	X-100 30	Mobiloil A	Castrol XL
	32° F. down to 10° F.	Energol Motor Oil S.A.E. 20W	Duckham's "Nol Twenty"	Essolube 20	X-100 20/20W	Mobiloil Arctic	Castrolite
	Below 10° F.	Energol Motor Oil S.A.E. 10W	Duckham's "Nol Ten"	Essolube 10	X-100 10W	Mobiloil 10W	Castrol Z
Diesel Engine (2.2 litre)	Above 90° F.	Energol Diesel D S.A.E. 30	Duckham's H.D.30/Mil.	Essolube H.D.30	Rotella 30	Mobiloil D.E. 30	Castrol C.R.30
	Below 90° F.	Energol Diesel D S.A.E. 20W	Duckham's H.D.20/Mil.	Essolube H.D.20	Rotella 20/20W	Mobiloil D.E.20	Castrol C.R.20
Transmission		Energol Motor Oil S.A.E. 30	Duckham's "Nol Thirty"	Essolube 30	X-100 30	Mobiloil A	Castrol XL
(*a*) **Rear Axle**		Energol Transmission Oil S.A.E. 140	Duckham's N2	Esso Gear Oil 140	Dentax 140	Mobilube C.140	Castrol D
(*b*) **Steering Box** (*c*) **Oil Nipples**		Energol Transmission Oil E.P. S.A.E. 140	Duckham's Nol E.P.T. 140	Esso Expee Compound 140	Spirax 140 E.P.	Mobilube GX-140	Castrol Hi-Press
Wheel Hubs		Energrease L.3	Duckham's H.B.B. Grease	Esso Grease	Retinax A	Mobil Hub Grease	Castrolease Heavy
Distributor and Oil Can		Energol Motor Oil S.A.E. 20W	Duckham's "Nol Twenty"	Esso Handy Oil	X-100 20/20W	Mobil Handy Oil	Wakefield Oilit
Upper Cyl. Lubrication		Energol U.C.L.	Duckham's Adcoids	Esso Upper Cylinder Lubricant	Donax U	Mobil Upper Lube.	Wakefield Castrollo

(*a*) **Rear Axle**: For temperatures below 32° F. use S.A.E. 90 Lubricant.
(*b*) **Steering Box**: For temperatures below 10° F. use S.A.E. 80 E.P. Lubricant.
(*c*) **Oil Nipples**: For high temperature climates the grease as shown for hubs can be used.

Shock Absorbers: Use Armstrong's Super (thin) Shock Absorber Oil.
Jacking System: Use Smith's "Red Jackall" Fluid.

REVERSE FORK ROD

A 70, A 90, Austin-Healey 100

In order to eliminate the possibility of jumping out of reverse gear under exceptionally heavy load conditions, the reverse rod has been modified by deepening the gear engagement groove and altering its shape, see illustration.

INTERCHANGEABILITY

The new reverse fork rod will be supplied for replacements for the Austin Healey 100, and in the interests of standardisation will be supplied as a replacement on the A70 and A90 models, when stocks of the old reverse fork rod are exhausted.

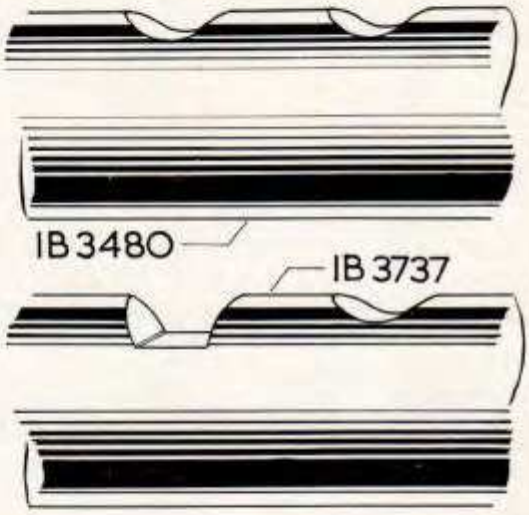

STR 1664

SUMMARY OF ALTERATION

Description	Number per Vehicle	Old Part	New Part	Type and Parts List Publication Number
Reverse Fork Rod . . .	1	IB 3480	IB 3737	A70 Pubs. 780A, p. 29 853, p. 27 603A, p. 31 730, p. 26 A90 Pub. 787, p. 32 Austin-Healey 100 Pub. 1050 Gearbox, p. 2

COMMENCING CAR ENGINE NUMBER :—
To be published at a later date

FOR YOUR RECORDS	
	PARTS LISTS
	STOCK CARDS
	PARTS ORDERED
	ALTERATIONS NOTED

Printed in England, September 12th, 1955

30

RUBBER SEAL (DOORS TO SCUTTLE)

Austin-Healey 100

Sealing rubbers of improved design are now being fitted as a precaution against water entering the vehicle at the joints between the doors and the scuttle.

INTERCHANGEABILITY

The new sealing rubbers can be used together to replace the old sealing rubbers.

SUMMARY OF ALTERATION

Type	Range	Plate	Description	Number per Vehicle	Austin Part Number	Parts List Publication Number
Austin-Healey 100	To B.11142		Sealing rubbers, doors to scuttle	2	14B 2747	
	B.11143 on		Sealing rubber, door to scuttle, right hand	1	14B 5494	Pub. 1050, Doors, p. 1
			Sealing rubber, door to scuttle, left hand	1	14B 5495	
			Attachment bracket, right hand	1	14B 5496	
			Attachment bracket, left hand	1	14B 5497	
			Securing strip, right hand	1	14B 5498	
			Securing strip, left hand	1	14B 5499	
			Screws, self tapping	14	6K 9713	
			Screws, attachment bracket to hinge pillar	6	PTZ 803	

FOR YOUR RECORDS	PARTS LISTS
	STOCK CARDS
	PARTS ORDERED
	ALTERATIONS NOTED

Published December 5, 1955

SERVICE TOOLS

Part Number Alterations

Certain Service Tool part numbers have been altered, and it is essential that the new part numbers given below be quoted on all future orders.

These alterations should also be made to the Service Tool List, Publication 941B.

SUMMARY OF ALTERATION

Description	Old Part Number	New Part Number
Engine front cover locating bush	GT 3	18G 3
First motion shaft nut spanner	GT 5	18G 5
Crankshaft gear and pulley replacer	GT 16	18G 16
Valve rocker bush remover and replacer	GT 21	18G 21
Valve grinding-in tool	GT 29	18G 29
Rubber suction pad (use with 18G 29)	GT 29A	18G 29A
Rubber suction pad (use with 18G 29)	GT 29B	18G 29B
Propeller shaft flange wrench	GT 34	18G 34
Main bearing cap extractor	GT 42	18G 42
Valve spring compressor	GT 44	18G 44
Valve spring compressor	GT 45	18G 45
Camshaft gear extractor	GT 58	18G 58
Water pump bearing remover and replacer	GT 61	18G 61
Steering wheel extractor	GT 70	18G 70
Clutch centraliser	GT 79	18G 79
Clutch centraliser	GT 80	18G 80
Starting nut spanner	GT 96	18G 96
Starting nut spanner	GT 98	18G 98
Clutch assembly fixture	GT 99	18G 99
Camshaft liner remover and replacer	GT 124	18G 124
Steering ball joint separator	GT 125	18G 125
Fan pulley extractor adaptors	18G 245	18G 231A
Crankshaft pulley and oil pump gear extractor adaptors	18G 246	18G 231B
Fuel injection pump and camshaft sprocket extractor adaptors	18G 247	18G 231C
Camshaft thrust pad	18G 248	18G 231D
Fuel injection pump shaft thrust pad	18G 249	18G 231E

FOR YOUR RECORDS	
	PARTS LISTS
	STOCK CARDS
	PARTS ORDERED
	ALTERATIONS NOTED

SETTING THE OVERDRIVE SOLENOID

Austin-Healey 100

The hydraulic operating valve of the overdrive is lifted automatically by the plunger of an electric solenoid. The solenoid unit has two separate windings and an internal switch which is closed when the solenoid is not energised. The closing coil which draws an electric current of 18–20 amperes takes the initial effort of opening the valve after which the internal switch opens to disconnect the closing coil, leaving in use the holding coil which draws approximately one ampere. If for any reason the solenoid has to be removed, it will be necessary to check the setting for correct valve operation after refitting. This operation is very important, and failure to carry it out correctly can cause damage to the solenoid as well as faulty operation of the overdrive unit. Experience has shown that many solenoid failures have been caused by incorrect setting, for this reason the method of carrying out the operation has been modified to include the use of an ammeter as a means of ensuring that the solenoid plunger has operated the contacts which open-circuit the closing coil. The sequence of operations for setting the solenoid is as follows:—

1. Insert a $\frac{1}{8}$" pin (D) through the hole (A) in the setting lever (C) into the setting hole (B) on the right hand of the casing. The operating valve in the unit is now held open. Fig. 1.
2. If the solenoid bracket is of the closed type (Fig. 2) remove the cover plate.
3. Loosen the solenoid lever clamping bolt (A). Figs. 2 and 3.
4. Break the snap connector on the solenoid lead and connect through an ammeter to the battery negative, thus energising the solenoid.
5. Check that the current used is about 1.0 amperes. A current of 18–20 amperes indicates that the operating coil is not being open circuited when the plunger is fully home, and that the solenoid is faulty, and must be replaced.

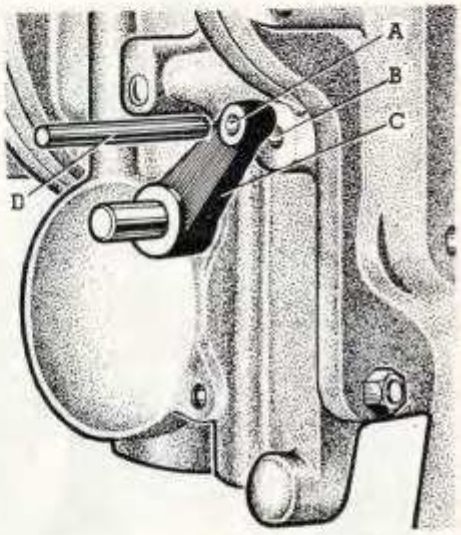

Fig. 1 STR 1175A

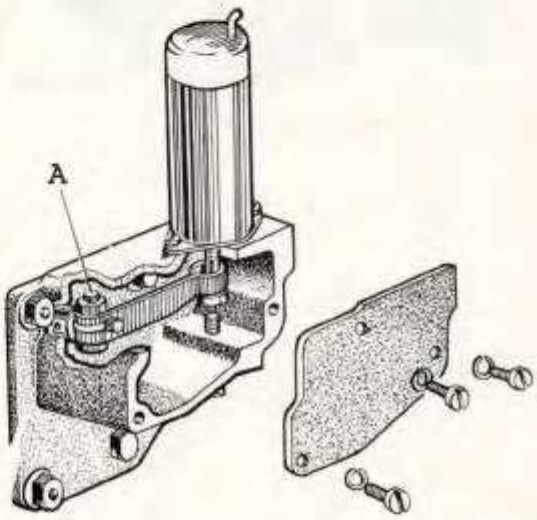

Fig. 2 STR 1176B

Continued

FOR YOUR RECORDS	PARTS LISTS
	STOCK CARDS
	PARTS ORDERED
	ALTERATIONS NOTED

SETTING THE OVERDRIVE SOLENOID—*continued*

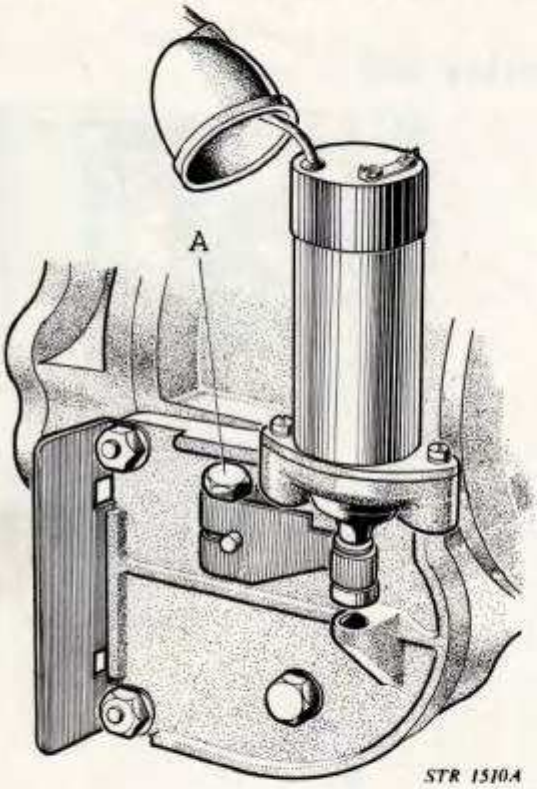

STR 1510A

6. Hold the solenoid lever down against the plunger collar.
7. Retighten the lever clamping bolt, taking care that there is no end play in the cross shaft.
8. Remove the locating pin from the right hand side of the gearbox.
9. Operate the solenoid several times to check the setting and ensure that the current is about 1.0 amperes. If the current is 18–20 amperes, as was previously 1.0 amperes in operation 5, it will be necessary to reset the solenoid lever again.

SIDE WINDOWS

Austin-Healey 100

New side windows of improved design are being fitted to the above model. The signalling flap has been re-designed to permit hand signals to be given with greater ease.

INTERCHANGEABILITY

The new side window assemblies can be used to replace the old, either singly or in pairs.

Type	Range	Plate	Description	Number per Vehicle	Austin Part Number	Parts List Publication Number
Austin-Healey 100	To B.7257		Side window assembly, right-hand	1	14B 2849	
			Side window assembly, left-hand	1	14B 2850	
	B.7258 on		Side window assembly, right-hand	1	14B 4668	
			Side window assembly, left-hand	1	14B 4669	
	To B.7257		Side screen frame assembly, right-hand	1	14B 3511	
			Side screen frame assembly, left-hand	1	14B 3512	
	B.7258 on		Side screen frame assembly, right-hand	1	14B 4670	
			Side screen frame assembly, left-hand	1	14B 4671	
	To B.7257		Side screen cover assembly with side window and flap panels, right-hand	1	14B 3540	
			Side screen cover assembly with side window and flap panels, left-hand	1	14B 3541	Pub. 1050 Doors, p. 1.
	B.7258 on		Side screen cover assembly with side window and flap panels, right-hand	1	14B 4674	
			Side screen cover assembly with side window and flap panels, left-hand	1	14B 4675	
	To B.7257		Side window panels	2	14B 3505	
	B.7258 on		Side window panels	2	14B 4584	
	To B.7257		Signalling flap panels	2	14B 3506	
	To B.7257		Beading, main rail, right-hand	1	14B 3520	
	B.7258 on		Beading, main rail, right-hand	1	14B 4680	
	To B.7257		Beading, main rail, left-hand	1	14B 3521	
	B.7258 on		Beading, main rail, left-hand	1	14B 4681	

FOR YOUR RECORDS	
	PARTS LISTS
	STOCK CARDS
	PARTS ORDERED
	ALTERATIONS NOTED

A-1.

STEERING SIDE AND CROSS TUBES

A40/A50, A90 Six, Austin-Healey 100

An alternative design has been adopted for the steering side and cross tubes fitted to the vehicles referred to above.

INTERCHANGEABILITY

Steering side and cross tubes are interchangeable with their old counterparts providing the appropriate ball pin nuts are used. Component parts are not interchangeable.

SUMMARY OF ALTERATION

Vehicle Type	Description	Number per Vehicle	Old Part	New Part	Parts List Publication Number
A40/A50 (GS.5, HS.5)	Steering side rods (Alternative to 1G 6293)	2	1G 6295	1G 6337	Pub. 1099B Steering, p. 5.
	Rubber boots	4	17H 3400	7H 3621	
	Clips for boots	4	17H 3401	7H 3626	
A40/A50 (GV.5, GP.5, GQU.5)	Steering side tube with ends, right hand	1	1G 6311	1G 6340	
	Steering side tube with ends, left hand	1	1G 6312	1G 6341	
	Dust covers	4	17H 3400	7H 3621	
	Clips for dust covers	4	17H 3401	7H 3626	
A40/A50 (GS.5, HS.5)	Steering cross rod (alternative to 1G 6292)	1	1G 6294	1G 6333	
	Cross rod end assembly, right hand thread	1	1G 6314	1G 6335	
	Locknut, right hand thread	1	2K 7657	51K 320	
	Cross rod end assembly, left hand thread	1	1G 6315	1G 6336	
	Locknut, left hand thread	1	2K 7658	51K 365	
	Rubber boots	2	17H 3400	7H 3621	
A40/A50 (GV.5, GP.5, GQU.5)	Steering cross tube with ends	1	1G 6313	1G 6338	
	End assembly, right hand thread	1	1G 6309	1G 6342	

Continued

FOR YOUR RECORDS	
	PARTS LISTS
	STOCK CARDS
	PARTS ORDERED
	ALTERATIONS NOTED

Printed in England May 22, 1956

5/-52

STEERING SIDE AND CROSS TUBES—*Continued*

Vehicle Type	Description	Number per Vehicle	Old Part	New Part	Parts List Publication Number
A40/A50 (GV.5, GP.5, GQU.5)	Locknut, right hand thread	1	2K 7657	51K 320	Pub. 1099B Steering, p. 5.
	End assembly, left hand thread	1	1G 6310	1G 6343	
	Locknut, left hand thread	1	2K 7658	51K 365	
	Nuts for ball pins	2	2K 3996	FNZ 307	
	Dust covers	2	17H 3400	7H 3621	
	Clips for dust covers	2	17H 3401	7H 3626	
A90 Six	Steering side rods (alternative to 1G 6293)	2	1G 6295	1G 6337	Pub. 1207 Steering, p. 4.
	Rubber boots	4	17H 3400	7H 3621	
	Clips for rubber boots	4	17H 3401	7H 3626	
	Steering cross rod (alternative to 1B 6246)	1	1B 6263	1B 6290	
	Cross rod end assembly, right hand thread	1	1G 6314	1G 6335	
	Locknut, right hand thread	1	2K 7657	51K 320	
	Cross rod end assembly, left hand thread	1	1G 6315	1G 6336	
	Locknut, left hand thread	1	2K 7658	51K 365	
	Rubber boots	2	17H 3400	7H 3621	
	Clips for rubber boots	2	17H 3401	7H 3626	
Austin-Healey 100	Steering side tubes with ends	2	1B 6228	1B 6292	Pub. 1050 Steering p. 4.
	Dust covers	4	17H 3400	7H 3621	
	Clips for dust covers	4	17H 3401	7H 3626	
	Steering cross tube with ends	1	1G 6313	1G 6338	
	End assembly, right hand thread	1	1G 6309	1G 6342	
	Locknut, right hand thread	1	2K 7657	51K 320	
	End assembly, left hand thread	1	1G 6310	1G 6343	
	Locknut, left hand thread	1	2K 7658	51K 365	
	Nuts for ball pins	2	2K 3996	FNZ 307	
	Dust covers	2	17H 3400	7H 3621	
	Clips for covers	2	17H 3401	7H 3626	

Commencing Car/Engine Numbers :—

A40/A50 – To be published at a later date

A90 Six – To be published at a later date

Austin-Healey 100 – – – – 228932

52.

THERMOSTAT

A 30, A 40/A 50, 16-H.P. Taxi and Hire-Car (Diesel), Austin-Healey 100

A new thermostat incorporating a 'jiggle-pin' in the vent hole—see illustration, has been introduced. The purpose of the 'jiggle-pin' is to prevent the vent hole from becoming blocked with rust or dirt, and to ensure rapid warming up from cold. When the engine is stopped the pin hangs down under its own weight leaving the vent hole open to ensure that an air lock does not occur when the engine is refilled with water after draining. When the engine is running the pressure of water from the pump forces the pin to rise and seal the vent hole, thus completely closing the waterway until such time as the engine is warm and the thermostat opens.

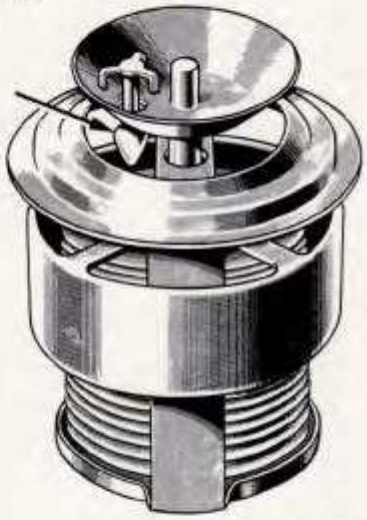

STR 1653

INTERCHANGEABILITY

The new thermostats are interchangeable with the old ones and will be supplied for replacements when stocks of the old ones are exhausted.

SUMMARY OF ALTERATION

Description	Old Part	New Part	Type and Parts List Publication Number
Thermostat (73° C.) . . .	3H 823	11G 133	A30 Pub. 883B, Engine, p. 13 A40 Pub. 1099, Engine, p. 20 A 40/A 50 Pub. 1099A A 40 Engine, p. 12 A 50 Engine, p. 13 Austin-Healey 100 Pub. 1050, Engine, p. 13 2.2 litre Diesel Engine Austin Service Journal, Volume 24, Engine, p. 13
Thermostat (82° C.) cold climates only	3H 2465	11G 134	

COMMENCING ENGINE NUMBERS:—

A30	To be published later
A40/A50	65582
16-H.P. Taxi and Hire Car (Diesel)	225213
Austin-Healey 100	225568

FOR YOUR RECORDS	
	PARTS LISTS
	STOCK CARDS
	PARTS ORDERED
	ALTERATIONS NOTED

THIRD MOTION SHAFT THRUST WASHER

A 40, A 50, A 70, Austin-Healey 100 (BN.1)

To facilitate production a new third motion shaft front thrust washer with plain surfaces is now fitted, instead of the recessed washer as previously used.

INTERCHANGEABILITY

The new washer is interchangeable with the old one and will be supplied from replacements when stocks of the old ones are exhausted.

SUMMARY OF ALTERATION

Description	Number off	Old Part	New Part	Type and Parts List Publication Number
				A 40/50, Pub. 1099A, Gearbox, p. 2.
Thrust washer, front, .156½"/.157½" thick (Alternatives)	1	1B 3332	11G 3127	A 70, Pubs. 603A, p. 32, 730, p. 26, 780A, p. 30, 853, p. 27.
Thrust washer, front, .158½"/.159½" thick (Alternatives)	1	1B 3492	11G 3128	A 90, Pub. 787, p. 32.
Thrust washer, front, .160½"/.161½" thick (Alternatives)	1	1B 3493	11G 3129	Austin-Healey 100, Pub. 1050, Gearbox and Overdrive, p. 3.
				*Nash Metropolitan, Pub. 9048, Gearbox, p. 3.

* Special circulation only.

COMMENCING CAR ENGINE NUMBERS:—

A 40/50 – – – – – 34825
A 70 – – – – – } Service purposes only.
A 90 (BD.2, BE.2) – – – } Service purposes only.
Austin-Healey 100 (BN.1) – – } Service purposes only.

COMMENCING CHASSIS NUMBER:—

Nash Metropolitan – – – 15011

FOR YOUR RECORDS	PARTS LISTS
	STOCK CARDS
	PARTS ORDERED
	ALTERATIONS NOTED

31

TIGHTENING SWIVEL AXLE NUTS

A 30, A 40/50, A 90 'Six', Austin-Healey 100

When tightening the swivel axle nuts it is advisable to use a torque spanner, to ensure adequate tightening, without risk of damage caused by over-tightening. The correct torque loadings are as follows.

Model	Torque figure
A 30	35/45 lbs. ft. (4.84/6.25 kgm.)
A 40/A 50 A 90 "Six" Austin-Healey 100	50/80 lbs. ft. (6.92/11.08 kgm.)

These figures will ensure that the hub is efficiently tight, without any overloading, and give a margin for lining up of the cotter holes.

FOR YOUR RECORDS	PARTS LISTS
	STOCK CARDS
	PARTS ORDERED
	ALTERATIONS NOTED

VALVE ROCKER BRACKETS AND LOCATING SCREW

A 70, A 90, Austin-Healey 100, A 125, A 135, 16-H.P. Taxi and Hire-Car

To facilitate production and service, common valve rocker shaft brackets and locating screws have been introduced. The tapped hole in the rocker bracket of the 2.2 litre diesel engine has been changed from a U.N.F. to a B.S.F. thread. This enables the diesel engine rocker brackets to be used for replacements on the petrol engines. The B.S.F. threaded locating screw, formerly used on the petrol engines only, is now used on the diesel engine also, making these components common to all. The diesel engine rocker bracket without tapped hole, part number 11B 121, is now used on the petrol engines, no modifications being necessary.

INTERCHANGEABILITY

The new B.S.F. threaded rocker bracket, part number 11B 298, will be supplied for replacements of its earlier counterpart when stocks are exhausted; it is directly interchangeable with 1B 2110, but must be used in conjunction with locating screw 11B 299 when used for replacements of 11B 120. The locating screws with B.S.F. and U.N.F. threads respectively are not separately interchangeable. The diesel engine rocker brackets without tapped hole, part number 11B 121, will be supplied for replacements of 1B 1804 when stocks of the latter are exhausted.

SUMMARY OF ALTERATION

Description	Old Part	New Part	Type and Parts List Publication Number
Valve rocker bracket with tapped hole	11B 120	11B 298	2.2-litre Diesel Engine Austin Service Journal, Vol. 24, Cars, Engine, p. 41
Locating screw	11B 122	11B 299	
Valve rocker bracket with tapped hole	1B 2110	11B 298	A 70, Pubs. 603, p. 7 730, p. 6 853, p. 6 780A, p. 6 Austin-Healey 100, Pub. 1050, Engine, p. 9 A 90, Pub. 787, p. 7 16-H.P. Taxi, Pub. 558 A, pp. 6/7 16-H.P. Hire-Car, Pub. 728, p. 6 A 125, Pubs. 430, p. 5 779, p. 6 A 135, Pub. 624, p. 6
Valve rocker bracket without tapped hole	1B 1804	11B 121	

COMMENCING ENGINE NUMBERS:—

A 125, A 135 — 16-H.P. Taxi (Petrol), 16-H.P. Hire-Car (Petrol) } 225618

16-H.P. Taxi (Diesel), 16-H.P. Hire-Car (Diesel) } 223710

Austin-Healey 100—225030

A 70, A 90 } For Service only

FOR YOUR RECORDS	
	PARTS LISTS
	STOCK CARDS
	PARTS ORDERED
	ALTERATIONS NOTED

WINDSCREEN STANCHIONS

Austin-Healey 100

To ensure a correct fit the side stanchion and stanchion foot must be a matched pair; the number stamped on the side stanchion corresponding with the number stamped on the stanchion foot. Therefore, in future, these parts will only be supplied in pairs and not separately as hitherto.

SUMMARY OF ALTERATION

Description	Number per Vehicle	Old Part	New Part	Parts List Publication Number
Side stanchion, right hand . . .	1	14B 1853	—	Pub. 1050, Windscreen, p. 1.
Stanchion foot, right hand . . .	1	14B 1864	—	
Side stanchion and foot assembly, right hand	1	—	7H 9825	
Side stanchion, left hand . . .	1	14B 1854	—	
Stanchion foot, left hand . . .	1	14B 1865	—	
Side stanchion and foot assembly, left hand	1	—	7H 9826	

FOR YOUR RECORDS	
	PARTS LISTS
	STOCK CARDS
	PARTS ORDERED
	ALTERATIONS NOTED

WINDSCREEN WIPER

Austin-Healey 100 (BN.2)

The following gives a stage-by-stage description of the internal design and working of the windscreen wiper (Type DR.2) which is being fitted to the Austin-Healey 100 (Model BN.2).

The dual-arms of the DR.2 windscreen wiper are driven at approximately 50 wipes per minute by a shunt wound electric motor, rubber mounted beneath the bonnet. The current consumption of the motor is 2.3 to 2.9 amperes.

A push-pull drive from the motor is transmitted to the wiper wheelboxes through a flexible cable rack run in rigid protective tubing. The fast rotary motion of the motor armature is converted to a slow reciprocating motion, as imparted to the cable rack, by means of a single-stage reduction gear, connecting rod and cross-head in a gearbox built integral with the motor (see Fig. 2).

The cable rack comprises an inner steel core wound with a wire helix which engages at the wheelboxes with toothed wheels on the wiper arm spindles. The method of arm-to-spindle fixing consists of internally splined headpieces on the arms mating with splined driving drums on the wheelbox spindles. Waterproofing at the scuttle piercings is assured by the use of double rubber bushings at these points (see Fig. 1).

The wiper is controlled from the instrument panel by a simple "on-off" switch. When this switch is turned to "off", the blades come to rest at the end of a wiping stroke, irrespective of their positions on the windscreen at the instant of switching off. This is arranged by means of an adjustable limit switch built into the gearbox and connected in parallel with the panel switch, the contacts of the limit switch being opened at a selected point once per revolution by a crank pin on the wormwheel.

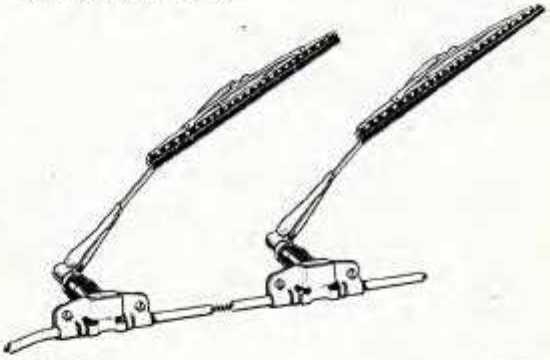

Fig. 1 STR 1666

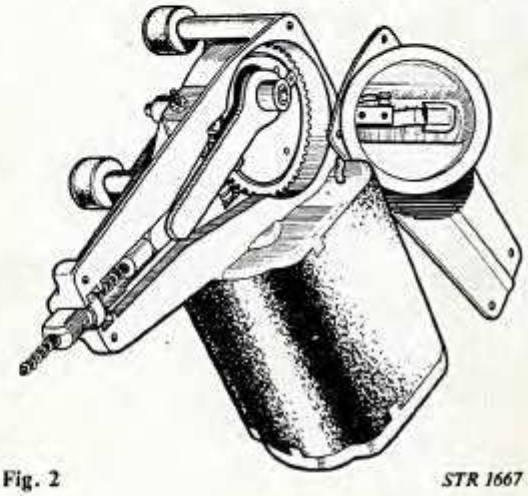

Fig. 2 STR 1667

FOR YOUR RECORDS	PARTS LISTS
	STOCK CARDS
	PARTS ORDERED
	ALTERATIONS NOTED

AUSTIN SERVICE JOURNAL

Distributor & Dealer Organization

No.* A / 421

Fleet Users

No.

11 Aug. 1961

FRONT WINGS

AUSTIN-HEALEY 100
(BN 1, BN 2)

On the Austin-Healey BN 1 model it has been found that, upon rare occasions when either of the front road springs is fully compressed and the steering is on full lock, the tyre has a tendency to foul the front wing panel.

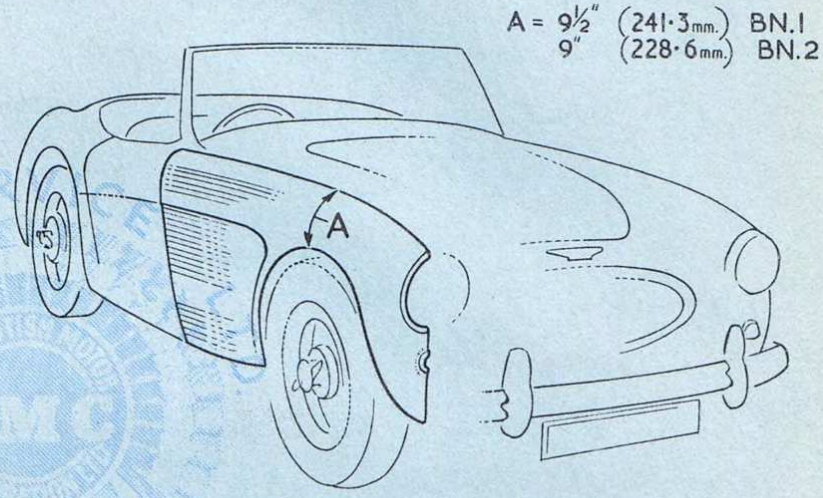

The turning circle of the BN 2 has been decreased in comparison with that of the BN 1, and in consequence the 'opening' line of the front wing panel has been altered to give greater clearance to the road wheel (see illustration). The new front wings may be fitted to the BN 1 model in pairs and will obviate any possibility of the above fault occuring. If only one of the new type wings is fitted to a BN 1 model the visual difference may give an erroneous impression that the vehicle is low on one side. Under no circumstances should an attempt be made to fit BN 1 type front wings to a BN 2 model.

Details of old and new wings are as follows:-

Model	Range	Description	Part No.
BN 1	C 138031 to C E 228046	Front wing assembly, right-hand Front wing assembly, left-hand	4B1032 4B1033
BN 2	C E 228047 on	Front wing assembly, right-hand Front wing assembly, left-hand	4B2027 4B2028

* Cancels article in Volume 26, Body, page 3 (dimensions revised)

TECHNICAL REPORT (Part)
BALANCING WIRE WHEELS

N.S.W. AUSTRALIA Austin-Healey OWNERS CLUB FLAT CHAT

SEPTEMBER 1998

Balancing splined wire wheels on a computerised dynamic balancer is not always successful and on car balancing is usually done. However, on-car balancing only corrects static balance and you may still experience shimmy.

I've made up a splined hub adapter that overcomes the fitting problems so the dynamic balancing can now be done.

There is two sizes available to suit 28.56mm (1 1/8 ") shafts and 40mm shafts of balancing machines. Other sizes are not catered for. These two sizes are the most common and the kit is available to all members, give me a call when you want to borrow the kit.

Have fun

Barry Campbell

The adaptor is in the hands of the Club's Equipment Officer.
Barry is the Equipment Officer at present.

DON HARDIE 22/07/02

N.S.W. AUSTRALIA Austin-Healey OWNERS CLUB FLAT CHAT

May 1999

Installation & Balancing Instructions
for Spline Drive Wire Wheels
Used with permission of British Wire Wheel

Balancing

There are many opinions and misconceptions regarding balancing of "spline-drive" or "center-lock" wheels. To properly balance this special type of wheel, it must be centered in exactly the same manner that it is centered on your par. Figure #1 illustrates the two "seating surfaces" (the inside rear bevel, and the outside front bevel) that center the wheel. These two bevels are typically "machined" surfaces -- as opposed to exact surfaces that remain "rough cast". Note that the actual splines drive the wheel but do not center it - in fact, worn splines (on either the wheel or the hub of the car) can negatively affect the centering of the wheel, and cause the wheel to appear out-of true.

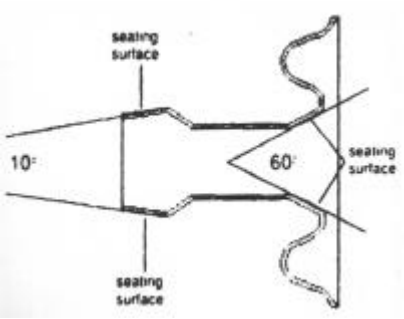

Figure 1

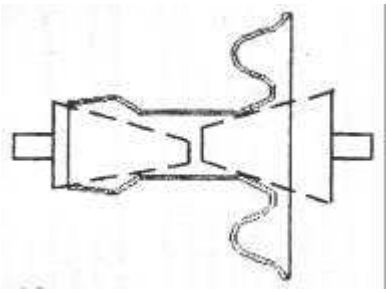

Figure 2

What Won't Work

With the advent of the state-of-the-art computer spin-balance machine, accuracy of balancing wheels was increased many-fold over the most popular prior method - the bubble balance. However, the computer spin-balancer cannot properly balance the spline-drive wheel unless it is centered in the manner described above. In most cases the operator of the spin-balancer will attempt to center wheels with the use of two cones (see Figure 42). The cones rarely center the wheel properly. The computer will advise the operator to apply weights to this non-centered wheel, which will usually throw the balance off even more than if there were no weights on the wheel at all. For those of you who doubt this, or get convinced by your local tire shop that they can balance your wire wheel on their spin-balancer with the "cone" method, try the following. If they get as far as putting weights on the wheel (that is, they haven't told you that the wheel is out-of-true -- remember -- it's not centered), it doesn't necessarily mean that it is balanced. As they're removing the wheel from the machine, ask them to rotate the wheel 180 degrees, put it back on the machine, and spin it again. If the wheel were properly centered and is balanced, their readings should indicate that no weights are needed. If the readings show that more than a quarter ounce is required-remove the weights and re-read the above.

What Will Work

The alternative is to find a spin-balancer (probably 1 chance in 100) that has a set of centering adapters made for center-lock wheels. These were made by Hoffman Co. about 20 years ago; don't confuse Hoffman spin-balancer machines with the center-lock adapters. Those adapters duplicate the rear bevel and include a "cap" which duplicates the outside bevel of the knock-off. In our opinion, this is the best way to balance your spline-drive wire wheels. A properly balanced wheel will almost always require weights on both tl-.e front and rear sides of the rim.

Excellent alternatives to the above include the simple bubble balance - this is the manner in which many of our wheels were balanced when the cars were new. Spin balancing on the car is another alternative. It is very useful when the car's suspension is worn and/or brake drums are out of balance. On-the-car balancing can be used after either of the above methods, to "fine tune" the balance on the car. Draw-backs of on-the-car balancing are that you can't rotate tires, and if you remove a tyre or wheel you must ensure it is returned in exactly the same position on the splined hub.

If you have purchased a "Dayton Wheel Products" wire wheel (since 1989) with a forged center hub shell (as opposed to the original, thinner, standard hub shell), the double spin-balancing method will probably work quite well. The reason is that this forged hub is machined on all surfaces, allowing the two cones a pretty good chance of centering the wheel.

Testing for Trueness

To test a wheel for "trueness" mount it on the car's rear splined hub (without tire if possible). Tighten the knock-off and spin the wheel slowly, using a pointer on the **inside bead of the rim** (where the tire seats). Movement of 1/32" is fine, even up to 1/1 6" can be acceptable. As mentioned above, worn splines (on either the wheel or on the hub of the car) can affect the centering of the wheel, and cause the wheel to appear out-of-true. Similarly, a worn rear bevel, or worn knock-off bevel can have a similar effect. If the wheel appears to have excessive "run-out" (either laterally or radially) when mounted on the splined hub, remove and replace the wheel after turning it 180 degrees. Check the movement now, if it's changed something is worn! **Do not check for trueness on the outer edge of the rim.**

Installation

Before installing your new or reconditioned wire wheels is the opportune time to clean the bevel, splines, and threads of the car's splined hub, and the threads and bevel of the knock-off. Use a toothbrush (preferably not yours) and solvent to clean all these parts. After cleaning, refer to the following section on "Spline Wear and Inspection". Re-grease, with a thin coating, all those areas just cleaned, including the bevels. We recommend a white, lithium based grease. Most greases will do; marine, and anti-seize greases are great.

After screwing the knock-off on by hand, finish tightening with your knock-off hammer. We strongly recommend a soft lead (**emphasis on soft**) 4-6 pound hammer; it should do no damage to the chromed knock-off. The original soft copper or hard-lead hammers will damage the knock-offs. Never use a rubber hammer or anything that weighs less than 2 pounds (don't laugh; some people who have, are still alive to talk about it). We do not recommend a plastic "shot" hammer. The knock-off should be tightened while the wheel is off the ground. Tighten until the knock-off does not move after being hit. Not everyone hits with the same force or with the same weight hammer, make sure the knock-offs are tight! "Left"-side knock-offs go on the driver's side of the car, (typical left-hand drive, U.S. car). "Right"-side knock-offs go on the passenger's side of the car. If in doubt, refer to your owners or shop manual.

Spline Wear and Inspection

Worn splines can be dangerous! Worn splines on a wheel will quickly wear the good splines on the splined hub of the car; worn splines on the hub of the car will quickly wear the good splines of a new wheel.

On the hub shell of the wheel, the rear-most portion of the splines (about 3/8") will show no wear (as they do not mesh with any splines on the hub of the car). This allows a very visual comparison between the front-most worn splines and the rearmost "new" splines. Also, by simply sliding a finger along the splines of the wheel, you will feel a ridge at the point that the "new" and worn splines meet.

Lifted from Healey Northwest February 1999

N.S.W. AUSTRALIA Austin-Healey OWNERS CLUB FLAT CHAT

June 2001

TECHNICAL REPORT

Last Month I covered some points regarding the front suspension, and would like to follow this up with a discussion on wheels and tyres.

It is stating the obvious to point out the importance of your wheels and tyres, as they are the only thing between your car and the road; but when was the last time you looked closely at them? These components must transmit all of the suspension loads, cornering and braking forces, and a little care is well worthwhile. In no particular order of priority, I suggest you consider the following points: -

1. **Broken Spokes.** These can be detected by visual inspection, or by tapping each spoke with a screwdriver or similar object. Good spokes will go "ping" but a loose or broken spoke will sound more like “glug". I find the best way to check for broken spokes is to remove the wheel and check the inside of the hubs. As most spokes fail by breaking off the knob at the end of the spoke inside the hub, this makes it very easy to detect. If only about 3 or 4 spokes are loose or broken, but otherwise the wheel looks in good condition, these spokes can be easily replaced. However **if** more than this are broken, and the wheel generally looks a bit sad, I would think seriously about replacing the wheel. this can be particularly true of original 48 spoke wheels, which by definition are now at least 35 to 40 years old.

2. **Tyres**. I still occasionally see Healeys being driven on tyres, which could be anything from 20 to 40 years old. I am talking of course about cars, which are regularly driven on the road, not concourse cars. These tyres generally have plenty of tread, but are showing signs of surface cracking, and have the resilience and stickiness of Bakelite. A set of new radials is not all that expensive in the scheme of things, but could transform the handling of your car as well as being a lot safer. I also question the wisdom of continuing to drive on a tyre which is getting close to reaching the "tell-tale" strips - when you work out the economics, you are saving at most about ~$10 to $15 worth of rubber and risking a skid on a wet road.

3. **Balancing**. Contrary to what most tyres fitters will tell you, the only correct way to balance a wire wheel is to mount it the way it is mounted on the car, i.e. on the inside and outside tapered faces on your wheel. The Club has an adapter, I also have one I can lend you if you have a problem. If a balance problem persists, look for an out-of-round wheel or a bump in the tyre.

4. **Splines**. Severely worn splines, on either hub or wheel, indicate replacement is needed. Severe wear is evidenced by a sharp corner on the top of this spline instead of a small flat section.

5. **Greasing**. A moderate amount of grease should be maintained on the hub splines to protect against wear and corrosion. Excessive grease will only be pushed off by the wheel, to be thrown outwards by centrifugal force to make your brake drums and wheels messy. A good idea is rather to grease the inside of the wheel splines. The tapered portion of the hub, where the wheel locates, should at most be given only a light smear of grease to prevent corrosion.

6. **Paint.** Finally, on new wheels, be sure to remove the paint from the tapered surfaces before mounting, otherwise, this paint will wear off the first time you drive the car, causing the knock-ons to work loose.

Enough for now, Happy Healeying,
John Dowsett

Tip Of the Month.
The original copper-hide hammers can still damage the surface of your nice new knock-ons Lead hammers are now available.

BADGE BAR

I bought the Badge Bar from AH SPARES in the UK in 2010, I mistakenly ordered their standard one, but they emailed me back to say the only had the premium one in stock, which was lucky.

BADGE BAR-4CYL.

Part Number: ACC105P

Product Name: BADGE BAR-4CYL.

Additional Information: PREMIUM

Description: This item is one of our 'Premium' range of products which means that it has been 'triple' plated for a long lasting and deep lustre. This is achieved by being polished to the highest standard. The item is then copper plated, followed by a coating of nickel and finally the finishing high gloss chromium layer.

Application: BN1-BN2

Quantity Per Vehicle: 1

INTERNET DOWNLOAD
BARBIE'S HEALEY

Off the internet 26/12/01 (I can't remember where)

12 VOLT BATTERY

Due to the difficulty of getting two 6 volt batteries in the 80s, I fitted a single 12volt one behind the driver's seat. A 230 long x 170 wide x 180 high one just fitted and you can still get ones that size today. A carrier was made of aluminium with tabs to accommodate the hold down fitting and bolted to the threads in the chassis with spacers to bring it above the edges of the original 6 volt battery carrier. A plastic tray with a plastic pipe outlet going into the rear wheel arch takes care of any acid or water spills and the hold down fitting is secured to holes in the tabs on the aluminium tray.

Make sure the battery has the terminals as shown below, as the main battery lead going to the solenoid on the front bulkhead may not reach if the post is on the other side of the battery, the forward one positive for negative earth or negative for positive earth.

The original battery wires to the left hand 6 volt battery and the one to the battery switch were replaced with one going from the 12 volt battery rear post to the battery switch.

Don Hardie

30 09 2015

JOHN HARPER'S ARTICLES
No 3
JUNE 1990

Feedback

After only two articles I have already had an encouraging amount of feedback This has been partly confirmation or update on technical matters and partly encouragement to continue. It would be unrealistic to thank those that have contacted me in person so I will do it through this article. Thank you. The technical feedback will be used to produce further articles or updates so please keep it flowing it will benefit all 1 00 owners. One small point, the use of a 12-volt polarity converter that I suggested in the last REVCOUNTER is not suitable for use with burglar alarms as the converter takes current even though the alarm doesn't. The battery will be run down if left for long periods.

Fuel Tank Sender Units

Recently I made a silly mistake, which I will reveal so that others may benefit and not do the same. Having fitted a replacement fuel tank I could not understand why the gauge never read less than 3/16th full, even when I was virtually out of petrol. The reason after a lot of checking was found to be that I had fitted the sender unit back to front with the electrical connection to the front of the car and the float to the rear. The correct fitting on the standard 12-gallon tank is float to the front, connection to the rear. The problem was that the float was "bottoming" in the centre of the tank and not dropping into the lower wedge shaped area at the front. The reason I made this mistake is that on the special order 15-gallon tank fitted to my 100M, which I had just removed, the float is fitted to the rear as this tank has a flat bottom. Incidentally the fact that the standard tank has this wedge in the bottom explains why the fuel seems to run out very quickly below the quarter full mark. In fact there is only about one gallon left and not three which one might assume. Whilst on this subject - a couple of tips. The correct tank sender unit is 1 B 2736 (Smiths FT5300/15) marked with its Smiths number 80875. A very near equivalent and quite suitable alternative is the unit fitted to most of the A30/35 and A40 Farina range Smiths FT5300/32 marked 80952. Finally the fixing screws are 3BA, which are not easily obtained, but good model engineering suppliers keep them.

Rear Hub - Oil Leaks

There are two areas where this can occur. The obvious one is oil seal failure, which I may deal with in a later article. The less obvious one is a leak past the flange gasket. This is potentially more serious as oil can easily get into the brakes with this form of leak as it only has run along the inside of the brake drum and straight on to the linings. In order to understand the cause of the leak it is first necessary to understand the construction of Austin and early BMC rear hubs. The secure location of the bearing relies on the flange of the half shaft clamping it tight into the hub. At the same time it is intended that the gasket between the flange and the hub is also held tight enough to prevent oil leaks. The problem is that with manufacturing tolerances the gasket may not always be clamped tight enough to prevent leaks and it cannot be tightened any further as

all the force is being applied to holding the bearing in place. This design error was recognised around 1958 and the first modifications were applied to the A30. The modification consisted of machining a groove about 3/16" wide into the face of the hub, increasing the inside diameter of the gasket and fitting a large 'O' ring into the groove. The machining tolerances, causing the variable clearance between the hub and half shaft flange being taken up by 'O' ring. This type of modification was also applied to larger BMC rear hubs as fitted to later 3000s. There were two attempts to cure the leak on the 3000 - early ones just had a step machined in the casting for the 'O' ring which gave no support to the inner circumference. This did not hold the ring firm enough so a larger one, fitted into a groove as on the A30, was introduced. The fact that there are two different diameters' rings on 3000s is not well documented in parts lists or current specialist supplier's catalogues. Back to the 1 00; on a late BN 1 fitted with a 5 stud rear axle or a BN2, one could fit the later modified 3000 hubs. On 4 stud hubs and as an alternative for 5 stud I have been fairly successful in creating the equivalent to the 'O' ring by carefully applying a complete ring of silicone instant gasket material on the face of the hub just inside the gasket and then tightening up the hub in the normal way. This, when set, leaves a complete flexible seal around the area where leaks can occur and prevents any further problems.

Batteries

The original 100 batteries had an overhang on the casing with holes through which long fixing bolts passed which were then screwed into threaded bushes on the chassis. This type has been out of production for some time now. The overhang has caused some confusion over the correct dimensions, particularly, the length. When owners have tried to buy 6V batteries they have often found that many suppliers still stock two sizes, both of which unfortunately are not the right size. The "too long at the base" one which was mainly kept in production for Volkswagen Beetle and the "too tall" one normally fitted to the MGB, although in the latter case one manufacturer has made a low version which is quite suitable for the 100 if a top frame is made to hold the battery in place.

The correct approximate dimensions are Inches
Height overall 7.6 Height of body 6.5 Width 6.8 Length overall (including overhangs) 8.6 Length of body (at the base) 7.3 Fixing hole centres 7.6

Recently a 100 owner has told me about a battery supplier who can supply a black cased battery with the overhanging top, which is almost identical to the Lucas original except in detailed markings. The supplier will not deliver and batteries have to be collected from an address in the South East of England. It is not the intention of these articles to provide free publicity for commercial organisations but if you wish to write to me (please do not telephone) and I will send you details.

JOHN HARPER'S ARTICLES
No 5

In conclusion Simon is right to point out that there are many useful parts to be obtained from 2.2 litre engines, but these need to be checked carefully before use because of all the minor changes and improvements that took place.

Fan Belt & Dynamo Pulley Size

The length of the fan belt is fairly critical as at one extreme the dynamo is up tight against the cylinder block and at the other the dynamo fan could cut into the top hose particularly if this is fitted a bit too low.

One problem sometimes Met is that a slightly larger pulley has been fitted from an Austin A70 or early A90. This in itself will not cause a problem but a slightly longer belt may be needed.

The two pulley sizes are 3 5/8' and 4 1/8" inches diameter. The larger one has two holes for a special puller. The smaller, correct one has to be pulled on the flange and can easily be broken, as it is a brittle casting.

The original BMC part number for the belt: is 2H 4238, but the most readily obtainable and best fit replacement is the Ferodo V150 with the following dimensions:

Outside Circumference 47.4 inches,
Inside Circumference 47.3 inches
Top Width 0.75
Thickness 0.5
Angle 32 degrees inclusive

A near equivalent, and sometimes recommended alternative, is the Ferodo V104 with an O.C. of 46.1”. This is rather tight: and may need the dynamo to be partly removed to fit it.

Other equivalents are; Mintex TK 474 or Romac C738

But I recommend checking these for size before attempting to fit.

DISCLAIMER: Whilst every effort is made to check the information incorporated in this series, no responsibility can be accepted for errors. However, corrections, improvements, suggestions & additional information will be very welcome (in writing please).

 To contact the author please write to him at: 7 Cedar Avenue, Ickleford, Hitchin, Herts. SG5 3XU. or Telephone 0462-51970.

100 PETROL TANK CAP VENT

I had been chasing a fuel smell for some time and found a small leak around a rivet and soldered it up. That fixed one problem but as the rear bulkhead is not sealed around the spare wheel, any petrol fumes from the vent hole in the petrol cap, get into the seat area from the boot, especially with the hood up or hardtop on, so I fitted a fitted a Charlie Hart Petrol Tank Cap Vent. The kit comes with all the bits needed and a page of easy to follow instructions.
A right angle swivel fitting attaches to the cap, a plastic tube goes down to the bumper bracket, then a small brass tube in the end of the plastic tube goes out between the bottom of the bumper bracket and rubber grommet into the open air.
No more fuel smell!!!

I got the idea from a Healeys -Team,Net Forum email on 29 Jul 2010, but have only just got around to it.

"Charlie Hart, a member of the So Cal Healey club has developed a great fix for the 100 gas cap. Best to have him describe it, but I have one on my 100 and it vents all of the gas vapor out of the trunk through a tube connected to the gas cap and then a brass tube out through the bumper grommet. It works great and I no longer have any gas fumes in my trunk.
I can travel and pack whatever I want in my trunk and when I unpack, the ode de healey does not permeate anything anymore. It's great. Charlie is part of this list and if you want your 100 trunk fume free, you should contact him at: - (mailto:hartcg@msn.com)
By the way, he's more than reasonable on the price for this fix and if you own a 100, it's a great investment.
Steven Kingsbury"

Also, Charlie has a 6 position fuse block which looks like it should be an original AND is attached using the existing holes and a wooden knock off wrench, which doesn't damage the knock offs, to use instead of your BIG hammer and other goodies, see : -.
http://www.healey6.com/Technical/Hart.pdf

Don Hardie

Email Charlie Hart for prices, etc.:

hartcg@msn.com

100 TECH 01

BEAD BLASTER

In 1992 I constructed a bead blasting cabinet and thought this might be of interest to club members.

After looking at bead blasting cabinets in several catalogues and Eric Rudd's in the flesh (or should I say metal), I designed and built one that was the largest I could get out of an 8'x 4' sheet of zinc coated steel.

In the following pages are construction details and plans, also included are plans for an inexpensive sheet metal folder for those without access to one.

So get folding and have a blast.

DON (THE MASTER BLASTER) HARDIE

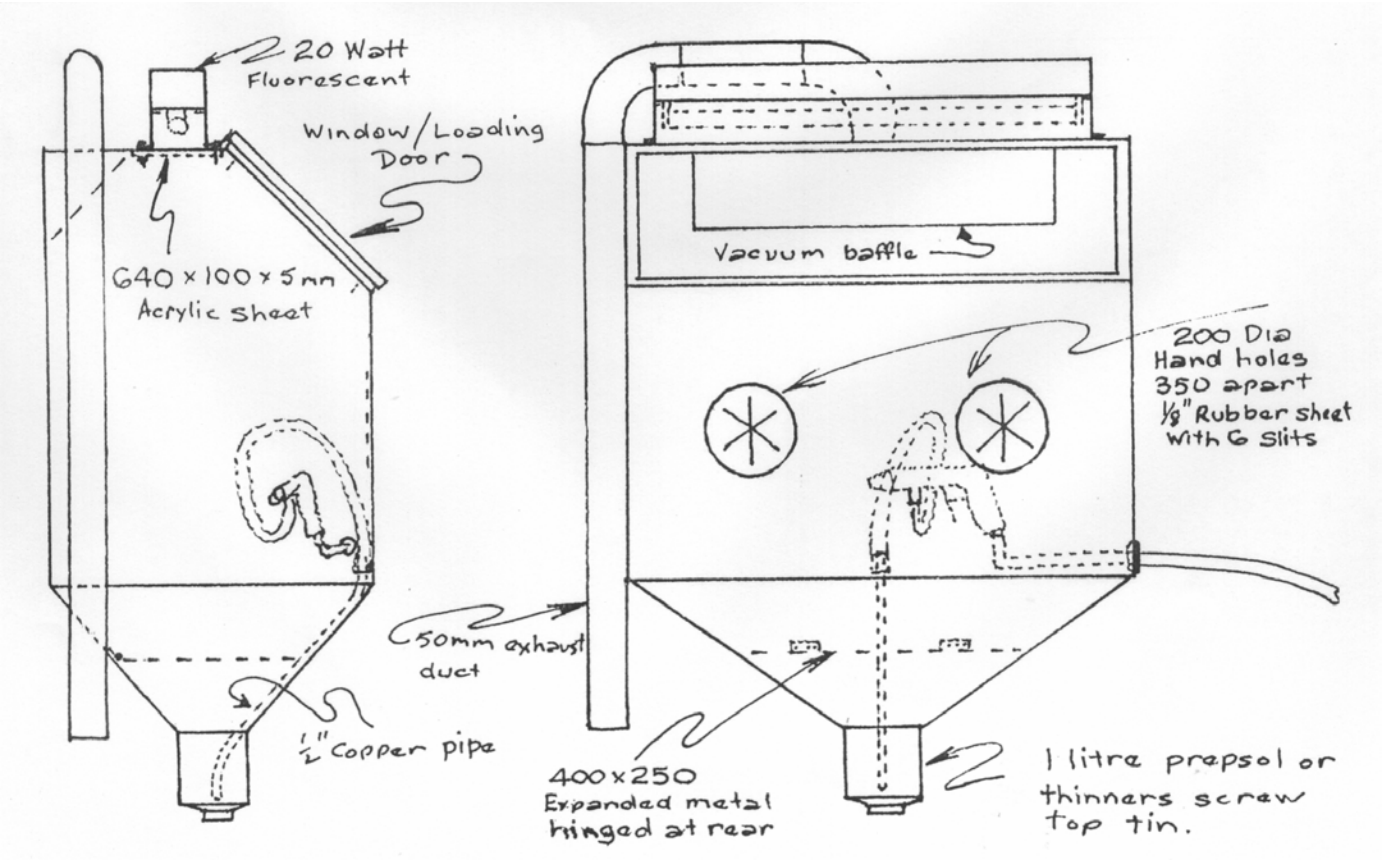

100 TECH 01

BEAD BLASTER

CABINET
The Steel Store at Brookvale supplied the Zinc Sheet and for $10 cut it up as per plan
Fold as per the plan to the required angles and assemble by spot welding or pop rivets, bolts, etc.
Cut a hole in the bottom of the hopper, leaving sufficient to turn down a flange, and attach a bottomless 1-litre screw cap tin (inverted).
Seal all seams, pop rivets, etc. I used 3 M Brush On Seam Sealer.
The finished Cabinet can be mounted on the wall or on 50mm angle iron legs.

WINDOW / LOADING DOOR
The glass is 700mm x 280mm x 6mm Laminated Safety Glass.
The frame is 20mm x 12mm x 2.5mm aluminium channel, hinged at the top and sealed with a strip of foam plastic attached to the cabinet.
The weight of the door is sufficient to maintain a seal.

VACUUM SYSTEM
Two bends and a length of 50mm down pipe were fitted as shown and connected to a Sadie Vacuum Cleaner with a piece of 50mm flexible demister hose.
The baffle was tack welded in place. This allows fine dust rust etc. to be sucked out but not the beads.

LIGHT
I used a 20 watt fluoro and a box to suit, cut a 600mm x 60mm hole in the top of the cabinet an mounted on the top and a 640mm x 100mm piece of clear acrylic (suitably sealed) inside the cabinet
Make sure the cabinet is electrically earthed.

GUN
Bring the compressed air line through the side, (a plastic fitting used for protecting electric cables going through holes in steel sheet works well) to a right angle fitting on the gun.
The rigid suction line is 12mm copper pipe secured by two saddles finishing 10mm above the screw cap.
The flexible suction line is 500mm of 12mm car heater hose, fitted as shown to allow free movement of the gun.

USE
1/2 fill the sump tin with beads turn on the vacuum and light and blast away using full compressor pressure.
Use gloves when blasting, I use chemical proof red gauntlets.
Beads will last longer if parts are cleaned of grease, dirt and loose rust first.

100 TECH 01

BEAD BLASTER

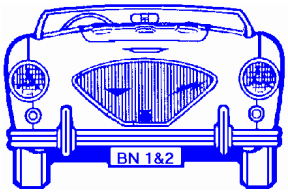

COST IN 1992	**$**
8’ X 4’ Zinc coated steel sheet (The Steel Store at Brookvale)	36.00
“ “ “ “ “ Cutting charge	10.00
700 x 280 x 6 laminated glass	18.00
50mm down pipe and 2 90deg bends (Hardware and General Brookvale)	19.00
Sadie Vacuum Cleaner (Narrabeen Flea Market)	20.00
Bead Blasting Gun (Peninsula Tools Brookvale)	22.00
Balotin Blasting Beads (Repco Brookvale)	48.00
	======
	$173.00

All the remaining bits I had on hand.

THE UNIT HAS BEEN VERY SUCCESSFUL AND USED FREQUENTLY, SO I NOW HAVE A FEW MORE TIPS.

Sometimes the beads compact down in the sump, when this happens just put your finger over the end of the gun and press the trigger. This blows air back down the suction line and aerates the beads.

The indication of when to change the beads, is when they wear down in size and don’t fall down the sloping hopper into the sump. They can also fill the cabinet with a fog when they are very small in size.

Beads will escape around your arms and through the slits in the rubber seals. I have extended the gauntlets with vinyl and attached this around the holes.

A number of cabinets have now been made with some variations to the original design eg.

An end opening door for easier loading.

Larger in size to accommodate wheels etc.

Steeper hopper angle so that the beads more readily gravitate to the bottom.

100 TECH 01

BEAD BLASTER

CUTS FOR 8' x 4' 22 Gauge ZINC SHEET

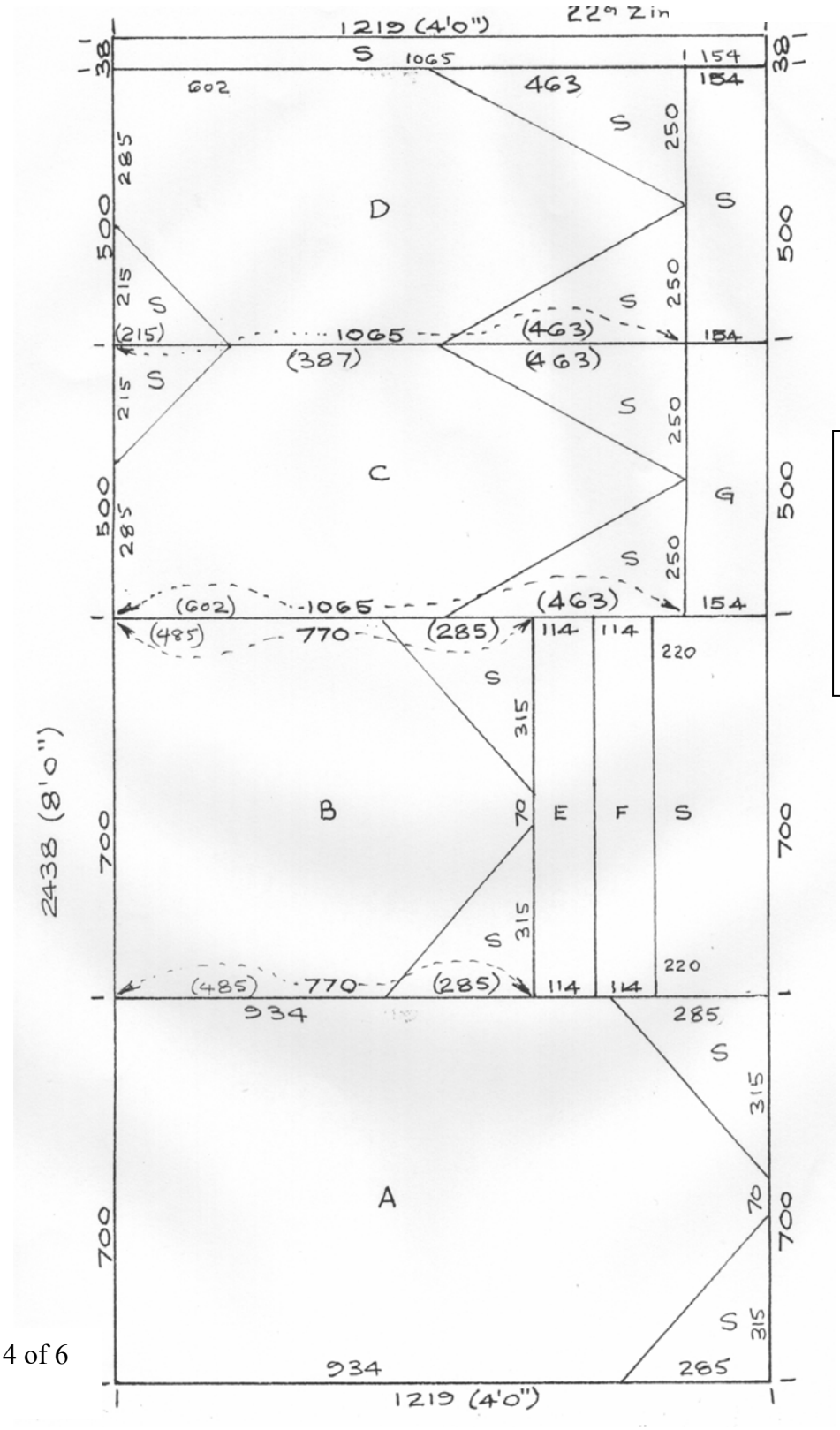

NOTES

1. "S" Denotes Scrap
2. E & F were used for Light Box.
3. G was used for Vacuum Baffle.

100 TECH 01

BEAD BLASTER

POSITION & ANGLES OF FOLDS

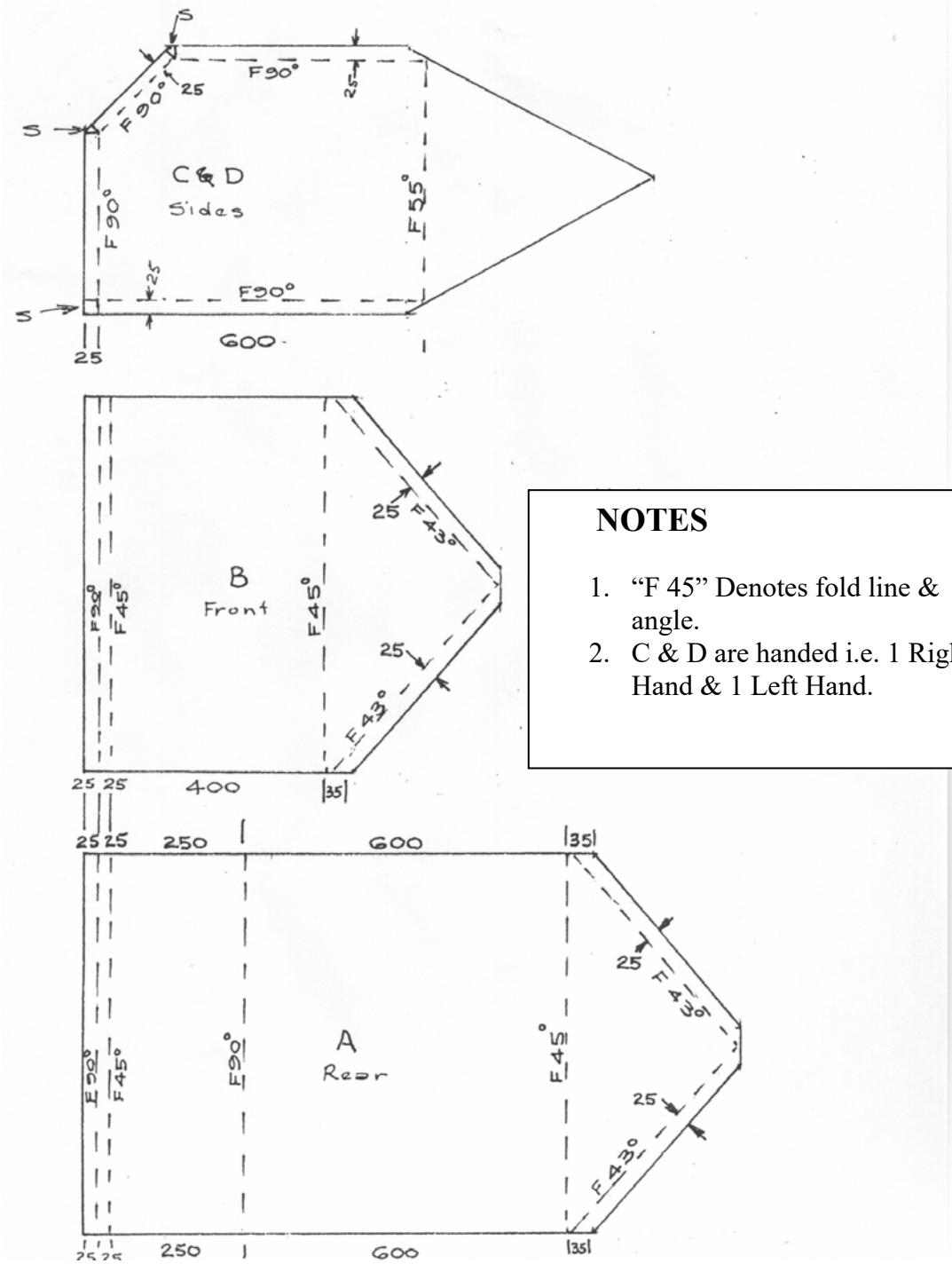

NOTES

1. "F 45" Denotes fold line & angle.
2. C & D are handed i.e. 1 Right Hand & 1 Left Hand.

100 TECH 01

BEAD BLASTER

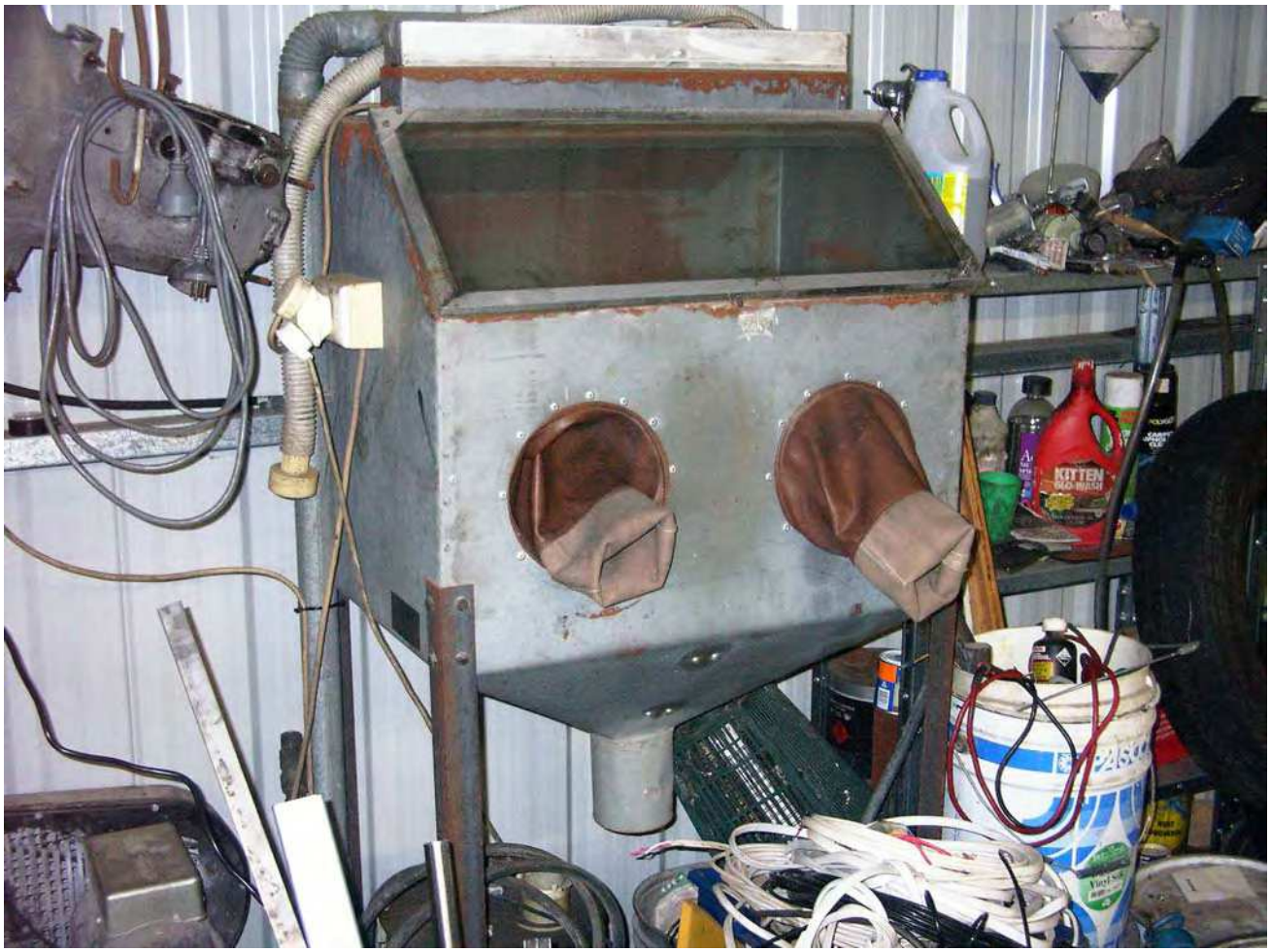

AircooledTech; Tools-On-The-Cheap

Soda Blaster For Carb Cleaning & Rebuilding

Cleaning and rebuilding your carbs can be difficult these days. The really good cleaners of yester-year are no longer available now that they have been deemed "bad for the environment" and outlawed. The cleaners we could always count on are now effectively rendered almost useless. Awe yes, I remember being able to buy a gallon can of carb-dip at the local parts store and it would strip decades of grime away over night with one 12 hour soaking. Now the same brand barely loosens varnish let alone cleans it away with days of soak time. . . You still need to get carbs clean, but chemicals today just can't do it alone and you don't want to spend an afternoon scrubbing all the nooks and crannies of your carb housings. What's a guy (or gal) to do??

Blast them!! "But wait", you say, "Blasting my carbs will fill them with grit that I'll never get out and my expensive carbs will be ruined." The solution is to use baking soda as the media. Yes, common, household baking soda!! "But don't I have to own a blasting cabinet or pressure blaster in order to blast my carbs??" The answer is NO. Below is a list of the items you need in addition to an air source like an air compressor:

-1 - air gun attachment

1 - two foot length of 7/16" clear vinyl hose

1 - one foot piece of wood dowel, metal rod or thick wire

1 - box of baking soda

1 - small roll of tape (masking or duct)

1 - sharp knife (or razor blade)

NOTE: As far as air compressors are concerned for blasting, the bigger then better. The more CFM it flows the better the results will be. If you try and blast with a tiny 2 gallon compressor, you will be disappointed. For best results use a compressor with at least a 25 gallon tank that flows at least 6 - 7 CFM. I personally use a 60 gallon, 5hp, upright, Ingersol Rand and get fantastic results. Again, the bigger compressor the better.

You start by cutting your length of vinyl hose approximately 2-2.5 feet long. Vinyl hose is available at home stores like Home Depot, Lowes, etc. for around $2.00 for a 10 foot roll. Then measure from one end in about 2" and mark it with a Sharpie.

Take your knife or razor blade and make a small cut across the hose ONLY through one side. The cut needs to be just large enough so that the tip of the air wand attachment will stick into the hose. Stick the tip of the air wand into the hose and let it stick in about 1/4" - 1/2".

Positioning your wand tip like this will create a venturi effect in the hose causing the soda to be pulled up from the box by low pressure and mixed with the high pressure air from the wand. Use one length of tape to wrap around the end of the air wand and hose. This will keep the hose in the proper position on the wand tip during blasting.

I cut the other end of the vinyl hose at a 45 degree angle to allow better flow of the soda into the hose. Then I tape the piece of dowel, metal rod or wire to the other end of the hose. This will help keep it from curling up in the box of soda and help you keep good flow into the hose. You will need to periodically shake the box to keep the soda flowing nicely.

Now you have your ultra low-tech & cheap soda blaster ready for blasting!!

WARNING: Blasting should ONLY be done outside in a well ventilated area such as a patio or concrete driveway. Of course proper eye protection and a face mask should always be worn. Baking soda is not poisonous but it feels like your breathing a soft drink if you inhale it and it's irritating, so protect those lungs!!

Baking soda will get all over you and the surrounding area, but don't worry, it won't harm anything. Just wear some cloths you don't need to wear for a hot date later because they will be coated white when you're done. Adjust your air pressure to about 80 - 90 psi on your compressor. You only need to hold the blaster tip about 6" or so from your carb parts and begin the blasting.

Soda is a soft media and will not harm the factory finish of your carbs. It removes all organic matter from the carb bodies as well as heavy corrosion scale in aluminum. It will not remove rust or corrosion from steel hardware; it only removes the scale build-up. You can freely blast into passages and the carb bowls since soda dissolves with water!!

Once you are finished blasting, simply place all your parts into a pot of warm tap water. The soda will dissolve into the water and leave NO RESIDUE behind. Then blow out the passages with air just as you normally would and your carbs are ready for re-assembly.

The mess on the concrete cleans up just as easy. Simply spray it down with the garden hose to dissolve the soda. NO caustic chemicals to seep into the ground water for future generations to deal with; this is a real "green" solution to carb cleaning and it's inexpensive too.

Below are a few before and after photos of some rare Porsche 356 carbs that I cleaned with this exact low-tech blaster. The results speak for themselves. Total cost for this blaster is about $5 including the box of soda!! So the next time you need your carbs cleaned, give this AircooledTech; Tools-on-the-cheap soda blaster a try and see what you think. I'll bet you never go back to chemical carb cleaners again!!

See the Garage Night guys feature video of my soda blaster in action here: http://www.garagenight.tv/diy-soda-blasting-build-your-own-rig-cheap/

Do you have a cheap but effective tool solution for a VW problem?? Send me your tricks, tips and cool, low-buck solutions and who knows, you may have it featured here in the future.

E-Mail Me Back To Main

BEARING REMOVAL

Occasionally removal of a ball bearing race can pose quite a problem, because of accessibility, or by the fact that many hours will be involved in removing & stripping a unit, perhaps only to replace a bearing or the oil seal behind it. If the shaft that the worn bearing supports can be withdrawn, then half the battle is won. Simply arc weld two or three balls to the outer bearing case or cup & repeat on the opposite side (same face). The resulting shrinkage as the weld cools, will release the bearing from it's housing. A roller bearing cup can be removed the same way.

Eric Comer ©

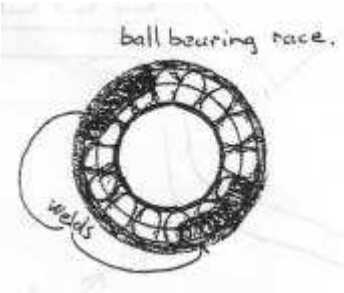

N.S.W. AUSTRALIA Austin-Healey OWNERS CLUB FLAT CHAT

Date ?

JOHN HARPER'S ARTICLES
No 7C

FEBRUARY 1991

BNl Three Speed Gearbox - 1

There is a lot to write about the three-speed gearbox and it will not all go into one article, so this is the first installment. In this first article I feel the need, in this units defence, to respond to Simon Tyrrell's article BOXING CLEVER published in the October 1990 REVCOUNTER.

I agree with Simon's view that this gearbox is not the strongest available and may not be the favourite for racing where the need to not exceed the capability of the car tends to be forgotten and all that matters is winning.

Beyond that I don't share Simon's view perhaps because I am one of the majority of owners who do not race. That is not to say that I don't drive hard and fast but I do admit to giving my gearbox just that bit of consideration for its age. I had many failures in the early 60s with an A70, the gearbox of which as most owners know is virtually the same unit.

This was fitted behind a 100M engine and very often pulled a trailer loaded up to a ton. All four gears were available and no overdrive was fitted. This set up would be rough on any gearbox. The failures I had were

Bottom and reverse gear worn badly due to very heavy use and lack of care when engaging, leading to very noisy operation so much so as to made other drivers turn and look.

A tooth lost off third gear causing damage elsewhere.

Jumping out of various gears.

Many design modifications were made over the years to improve the basic gearbox and this makes it essential to check which parts are fitted before carrying out a repair. It is not sufficient to rely on the serial number as somebody could well have repaired the gearbox before and fitted an alternative part or the conversion kit that was available for a time.

With detailed research I unraveled the various modifications and fitted them as appropriate. There were modifications available to overcome most of the problems that I had experienced, so with these fitted and just a little more consideration being given, I enjoyed many tens of thousands of miles of reliable running. This gearbox is still giving good service as I modified it to the 100 overdrive and gear change mechanism specification about two years ago and it is now fitted to my BN1. My experience is that

the three-speed gearbox can be totally satisfactory if treated reasonably. It was, you might recall fitted to most of the 100s that won races in the 50s and 60s.

A final word or two on Simon's article. I think that you will find that to fit the BN2 or BN4/6 units you will need more than to just "neatly relieve" the main cross member. So much will have to be cut away to give an adequate clearance that it is better to cut the member right out cleanly and keep it in a safe place to be welded back if required at a later date.
A smaller cross member copied from a BN2 or late six-cylinder car could then be easily made and welded in.
The overdrive fitted to the BN I gearbox is longer than all the later ones and has different mountings and steady bar lug. Attached to a BN2 unit the whole set up would be longer than any other big Healey gearbox - overdrive combination by many inches and could be very difficult to accommodate. It would be best to stick to a standard combination.

Rear Shock Absorber Links

Recently another Eastern Centre 100 has gone back on the road after a total rebuild. I was fortunate to be taken for a test ride and to be asked to comment on why the rear suspension was rather hard with nasty bangs occurring. A quick look underneath identified the problem. The shock absorber links had been assembled incorrectly. The arms should be more or less horizontal, not pointing up about 45 degrees. This must have been a frequent problem because Austin felt the need to publish a Service Journal in September 1959 which applied to 100, 100/6 and 3000. The text of which is reproduced below.

"Attention is drawn to the fact that the rear shock absorber installation for these cars has the Linkage to the axle ABOVE the arm and not below as is customary. It is quite possible to assemble the shock absorbers wrongly (i.e. in the conventional manner) but the effect is that the arm is almost at the end of its travel in the static position, so even a small amount of movement will result in breakage."

REPAIR TO BROKEN 3 SPEED CLUSTER

Note: - 2nd gear is the second largest gear on the cluster which is 3rd gear when the gearbox is used as a 4 speed as in the A70 sedan.

In March 1988 just 6 months after I bought the Healey the gearbox cluster 2nd gear lost one tooth and part of three others.

Club spares had an A70 gearbox, so with a rebuild using the best parts (as the original box had A70 gears) and new bearings we were back on the road fairly quickly.

This only lasted till January 1990 when the replacement cluster shed some teeth. It was decided that something had to be done to stop this happening again, after discussions with Newvale Engineering, then at Artarmon, they took on the job of replacing the gear on the cluster.

First the large constant mesh gear at the front of the cluster was turned off and then the 2nd gear as well, a new 2nd gear was made and shrunk on, the front gear of the other toothless cluster was remover suitably machined and shrunk onto the repaired cluster, both gears were then welded on and the whole thing normalised to relieve any stresses caused by the welding.

I was told that one of the staff had an off road racer that put 250 HP through a gearbox, which had all of its ratios changed this way, without any trouble.

Gradan Gears had a new A70 2nd main shaft gear on the shelf (surprise, surprise), the lay shaft was hard chromed, new bushes fitted and any thing that needed it fixed and/or replaced.

The repaired cluster and the remains of the donor.

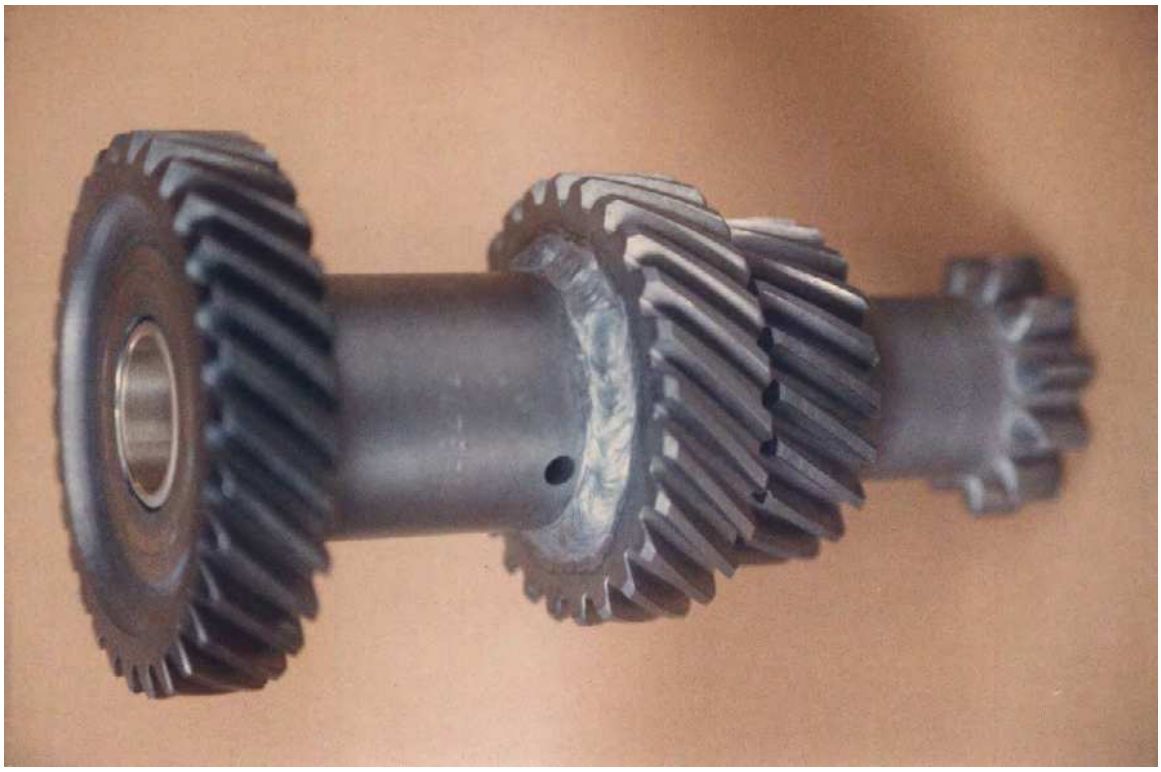

The repair has now done 62,984 miles, so hopefully it will go for many more. I must admit I try not to stress 2nd gear with high revs at full throttle.

Don Hardie October 2008

GEARBOX REMOVE & REPLACE

First disconnect the battery, remove seats, carpet, tail shaft tunnel extension (BN1), gearbox cover, gear lever, tail shaft bolts, speedo cable, clutch rod, rear gearbox mounting bolts and the wiring to the overdrive switches and solenoid.

Next apply the handbrake and MAKE SURE THAT IT IS NOT RELEASED DURING THE REMAINDER OF THE PROCEEDURE. Jack up the rear axle, chock up to about 300mm (12”). I use 2 pieces each side of 300x150x600 (6x12x2Ft) timber. Jack up the front wheels and chock up the same height. I use steel ramps and tie the wheels so they can’t move (just in case the handbrake is inadvertently released). Remove the engine tie rod, clutch connections and jack up the gearbox under the overdrive till it is high enough at the rear flange to allow removal.

Chock up under the rear engine plate. Use a piece of 150x120 x 450 timber and packing (at both ends), so when the gearbox is removed or replaced it can slide along it and it will also hold up the engine, now lower the jack under the gearbox. All you have to do now is remove the bell housing bolts, slide the gearbox back (on the above 150x120x450 timber) and remove it from the car. That’s about the worst part of the procedure.

To replace, manhandle the gearbox (in Top Gear) into the car and onto the 150x120 timber and slide it forward to mate with the clutch, you can hold the rear of the gearbox up with pieces of wood across the chassis rails, you will probably have to turn the rear flange to align the front shaft splines with the clutch, and push it forward up to the rear engine plate.

Now all you have to do is do up all the things you undid, replace all you took out and you are finished.

I found when I had the gearbox out the next time, that when reinstalling it the the front of the bell housing tended to dig into the timber, but a piece of sheet steel soon fixed that problem.

On my BN1 I was able to do all but remove and replace the gearbox from the car by myself, so good luck with your attempt.

Don Hardie healeynut@hotmail.com

I came across this photo in amongst my junk.

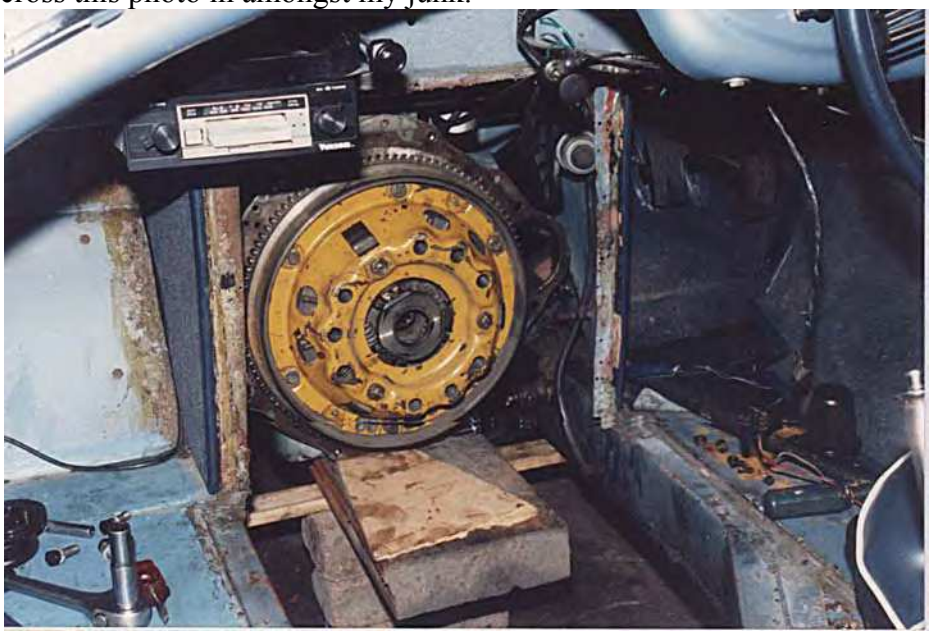

JOHN HARPER'S ARTICLES
No 13

HIGHER OUTPUT FUEL PUMPS

In the February 1991 Rev Counter I promised a follow up to the article on page 36 Titled: Fuel Pumps. This is it.

Some owners of 10OMs and cars which have higher performance modifications applied, have encountered fuel starvation at maximum power. This problem has also been experienced on the AUA 56 pump fitted to earlier 100/6s and was recognised by BMC who issued a technical bulletin. The AUA 56 is rated at 7 gallons per hour at normal operating pressure and this is presumably marginal for an uprated engine. There are various ways on a 100 of improving the fuel delivery rate.

1. Fit two pumps in parallel as per the official 100M modification. This modification went with the larger 15-gallon fuel tank, which had two outlets. On a standard tank some extra pipe work and 'T' pieces will have to be made up.

2. Fit an air bottle to the pump outlet union. This was the modification recommended by BMC for the 100/6. The small air bottle acted as a pressure reservoir and maintained the pressure during the suction stroke. Unfortunately I do not know where to obtain these bottles but they are very similar in size to a soda syphon replaceable cartridge.

3. Fit a LCS type pump as used on later big Healeys such as the AUA 72 or AUA 173. These are rated at l2Y2 gallons per hour but will need the fixing holes and pipe work modified.

4. Fit an even later AUF 303 pump as recommended as the service replacement for the above LCS type. This is rated at 15 gallons per hour and has an inbuilt pressure reservoir working in a similar manner to the air bottle mentioned above. The pipes and unions will again need slight modification but this pump is more like the original m general shape than the LCS.
One useful feature of the AUF pump is that it incorporates positive ventilation, as do later Sprites. Air is drawn through a small union in the side of the pump where the action of the back of the diaphragm pumps the air through @ small valve fitted into the cap. If this pump is used it is important that dry, clean air gets into the pump.
To do this a length of screen washer pipe may be fitted to the union and fed up into the car. On the 100 the best place is the compartment in the boot where the battery master switch is situated. The pipe should be run up to the top of this compartment and curled over. The advantage of this system is that the pump and points are kept clear of moisture and any small fuel build up behind the diaphragm.

MASTER CYLINDER PUSH ROD - SLACK

Often a very small lack of adjustment can cause quite a serious problem and the pushrod on the brake master cylinder is a particular culprit. The problem is that the 100 pushrod must always be kept slack. If it isn't the very small recuperating hole inside the cylinder will not be uncovered when your foot is off the pedal. When this happens fluid cannot return to the supply tank and instead builds up pressure

in the system. This then makes the brakes drag which in turn produces more heat and more pressure and even more drag.

The end result is a nasty smell and a car, which will not go along however hard you try.

This happened to me as a passenger on the Al with a lot of heavy traffic around and was just a little disturbing.

The cure was just to slacken the pushrod until it could be easily "rattled" and all was well. What I think had happened was that the new pedal hole sponge rubber pads had "settled", thus loosing the original clearance. The advice is therefore to reach under the car every so often and make sure that the push rod will "rattle". If it doesn't then nothing needs to be dismantled, all you need is a couple of open ended BSF/Whitworth spanners to make the necessary adjustment.

BONNET HINGES

The originals are fixed pins welded in place during manufacture. They are very inaccessible and virtually impossible to lubricate. Eventually they become dry and stiff. This leads to nasty noises when opening the bonnet and if really bad will result in bent or fractured brackets on the bonnet underframe.

The small modification that I have made to my 100 is to drill out these fixed pins and replace them with standard Y4 inch clevis pins. These have been fitted with a flat washer on each end and secured in the normal way with split pins. The significant point though is that I have used longer pins than necessary. I can now lubricate the pins after removing the front wheels by smearing them with chassis grease whilst sliding them side to side and rotating them with my fingers. This I do every time I grease the swivel pins.

I know that most owners like to keep their cars completely standard but perhaps just a small modification for practical purposes might be forgiven this once.

 **To contact the author please write to him at: 7 Cedar Avenue, Ickleford, Hitchin, Herts. SG5 3XU. or
Telephone 0462-51970.**

FLUTED BONNET

The fluted bonnet was bought at an Austin Healey Owner's Club Auction in 1992, the idea was to lower the under bonnet temperature. It did, but the temp was still high.
The flutes are in these positions and pattern as this is the only way they can be pressed in without removing the bonnet frame.

HOOD BOWS

Gentlemen,

I've been studying the many changes that took place within the Hundred production period and did not seem to be documented. Many of these are subtle little changes that had to do with better top stowage, easier sewing procedures and patterns, colours, and so on. Meanwhile the mechanical changes were very carefully documented so the spares department could update supplies, part number, etc.

As nearly as I can tell the top anchor brackets and links had two changes after the original "pivot only" design. The second change, which I note specifically on a very original July 13th car, has a slight straight slot in one of the arm links, the slot being only about 3/4" long and hardly noticeable. This helped the assembly to tuck a bit better when folded. The 3rd and very noticeable link with somewhat of an L shaped slot seems to have come in by the end of 1954. This slotted link allowed the entire top assembly to tuck back further away from the back of the seat back.

Unfortunately none of these seem to have specifically noted change points, so can only be tracked by observation. Of course 55 years after the fact, a lot of owners and restorers have tried to replace the earlier assemblies with the later ones, so unless a car is specifically known to be unrestored, we'll always run into this uncertainty.

Rich Chrysler ©

AHCA Hundred Registrar

GIRLING EQUIPMENT ON THE

AUSTIN HEALEY

"100" BN1 & BN2 1953-56

Issue II

MODEL	FRONT BRAKES	REAR BRAKES
Austin Healey "100" BN1 & BN2 1953-56	11 × 1¾ HLSS Section 2 Page 51 up to Chassis 228046 11 × 2¼ HLSS Section 2 Page 51 from Chassis 228047	11 × 1¾ HW Section 2 Page 43 up to Chassis 221535 11 × 2¼ HL3 Section 2 Page 55 from Chassis 221536
	MASTER CYLINDER	SUPPLY TANK
	⅞in. C.B. Side Fixing Section 3 Page 5	Single Feed Section 3 Page 19

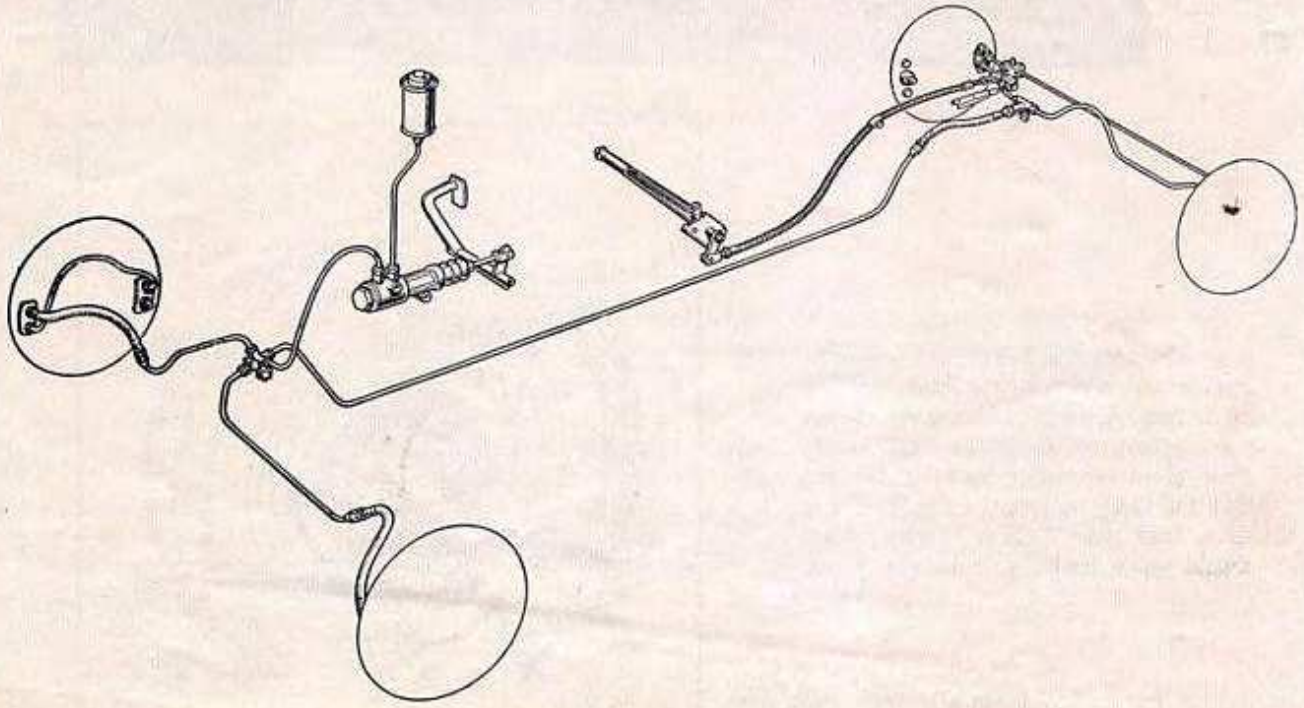

INSTALLATION

The braking system is fully hydraulic; the brakes on all four wheels are hydraulically operated by foot pedal application whilst the rears have additional handbrake mechanism actuated by a "pull up" type handbrake situated between the two front seats.

The footbrake pedal is directly coupled to the master cylinder in which the hydraulic pressure is originated and transmitted to all four wheels. A supply tank fitted to the right-hand engine mounting bracket for RHD models, and on the scuttle panel for LHD models provides a reservoir of fluid for replenishing the system.

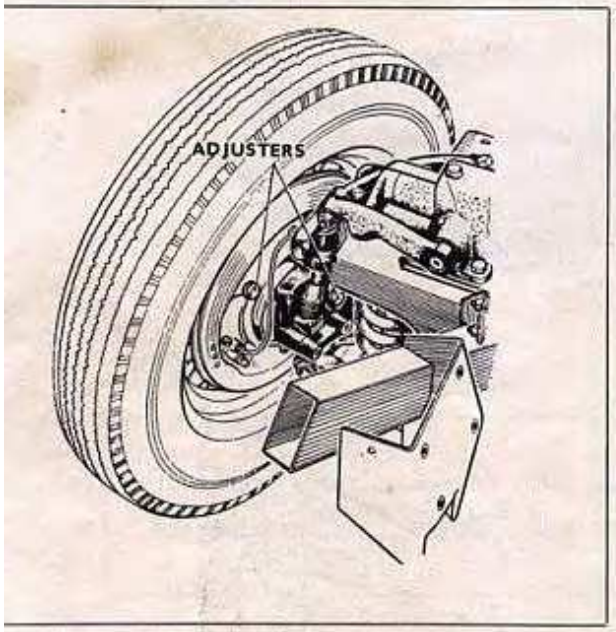

FIG. 1 Front brake adjustment.

GENERAL MAINTENANCE

The brakes are adjusted for lining wear at the brakes only and no attempt should be made to alter the operating linkage for this purpose. To adjust the front brakes, jack up wheels clear of the ground, slack off the two adjusters—diametrically opposed to each other on the backplate—by turning in an anti-clockwise direction and then turn one of the adjusters clockwise until the shoe touches the drum. Slack off until wheel rotates freely and repeat for second adjuster.

To adjust the rear brakes, first scotch the front wheels, release the handbrake and jack up the rear wheels. Turn the square adjuster stem—protruding through the backplate, in front of the axle—in a clockwise direction until the shoes are locked up in the drum, slack back two "clicks" when wheel should rotate freely, jack down and test.

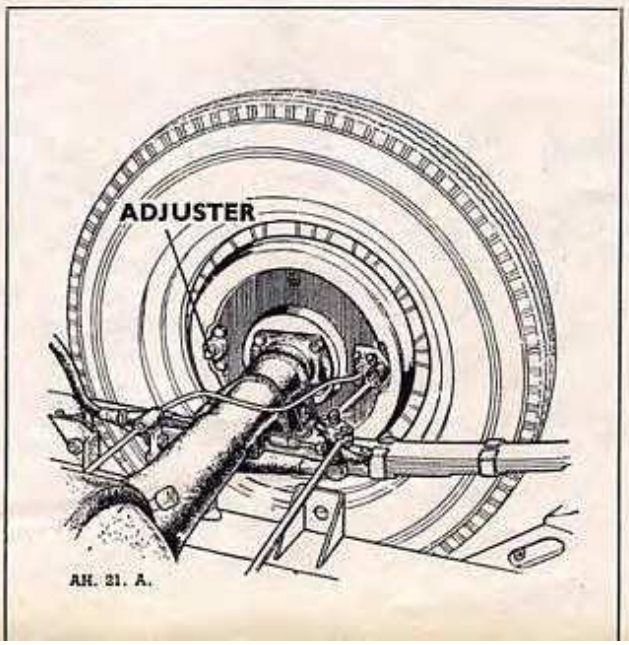

FIG. 2 Rear brake adjustment (early type).

The rear brakes altered at the chassis numbers shown but the adjustment remains the same, as shown in the illustrations, Fig. 2 early type, Fig. 3 later type.

If after adjusting the rear brakes there is still excessive free play of the handbrake it may mean that the cable requires adjusting.

To do this, first lock up the shoes in the drum, apply handbrake one notch and take up any slack in the cable by means of the adjuster on the cable, at the compensator end.

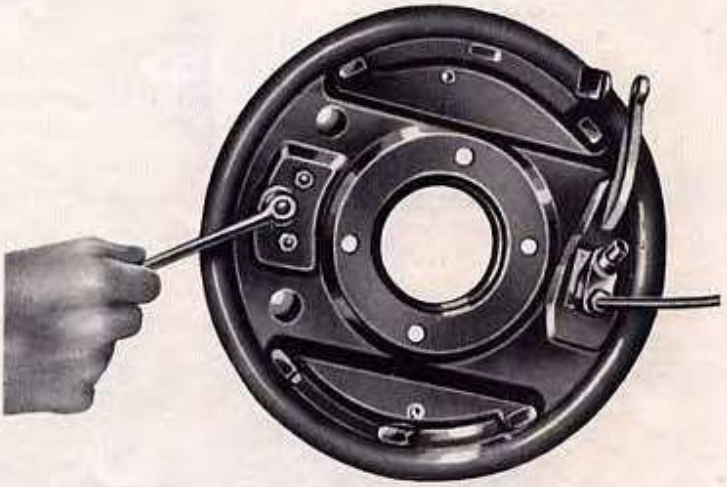

FIG. 3 Rear brake adjustment (later type).

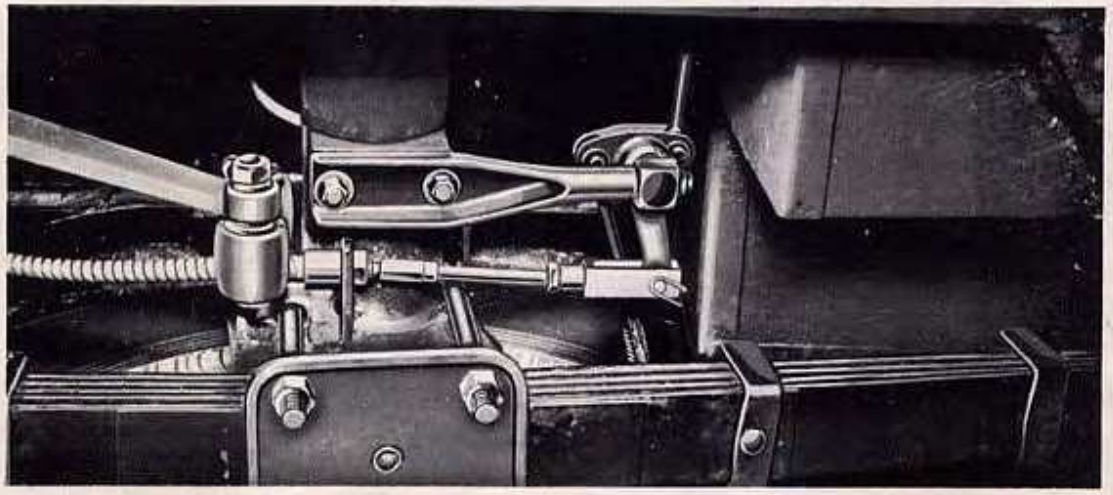

FIG. 4 Hand brake cable adjustment.

FOOT PEDAL CLEARANCE

With the pedal held in its full off position, adjust the master cylinder push rod to allow at least $\frac{1}{32}$ in. clearance between the push rod and master cylinder piston.

Every time the brakes are adjusted check the level of the fluid in the supply tank and if needed top up with Wakefield/Girling Brake and Clutch Fluid to three-quarters full or if fitted with a Girling filter until the filter is just awash.

Take great care that no dirt is allowed to enter the system when topping up, the Girling filter assists in this matter and its use is recommended.

TECHNICAL REPORT
BRAKES - ADJUSTMENT

A happy prosperous and trouble free New Year to you all. There were quite a number of cars presented at the Club inspection day with badly or maladjusted brakes. Herewith some tips in the brake adjustment department. Most cars in the CLUB have disc brakes fitted to the front. There is no adjustment needed. However, the cars with drum brakes on the front DO require them (the brakes) to be adjusted at regular intervals. These intervals can be judged by the feeling that your braking leg seems to need to be longer than normal to stop the car.

METHOD

Jack both front wheels off the ground. This makes it easier to turn the wheels, for both access to the adjusters and to spin the wheels. On the brake backing plate (a sort of big dinner plate with pipes and things bolted to it) you will find two 11/16" nuts. These are the adjusters. The adjusters turn clockwise, on both sides of the car, to tighten the brakes. Turn one adjuster at a time. Turn the adjuster, clockwise, until you are unable to turn the wheel. Now back off the adjuster, anticlockwise, till the wheel turns freely. Apply the brakes a few times, to centre the brake shoes and do the adjustment all over again. This time back off the adjuster, to centre the brake shoes and do the adjustment all over again. This time back off the adjuster until the wheel turns freely but with a slight scraping noise. This noise is the brake side touching the drum. This noise will disappear with the first few applications of the brakes when driving. Proceed to the other three adjusters and do the same as above. The rear brakes are the same on all Austin Healeys. Once again the adjuster is on the backing plate. BEFORE adjusting the rear brakes it is a good idea to disconnect the handbrake. This is done at the end of the handbrake cable which is visible on removing the off (or drivers) side rear wheel. Looking over the brake drum the handbrake cable can be seen joining to the bottom of a 'T' shaped thing with a clevis pin through which there is a split pin. Remove the split pin and clevis pin and release the cable. There will be a certain amount of resistance to this job created by the return springs of the handbrake rods to each wheel. The brakes can now be adjusted with the square adjuster, one on each wheel, found on the back plate. Turn the adjuster clockwise until the wheel will not turn, then back off the adjuster till the wheel turns easily. Once again apply the brakes a few times to centre the brake shoes and recheck the adjustment. When both wheels are done the handbrake can be adjusted. Release the brake rod return springs at the back plate. The end of the handbrake cable has an adjustable section which is locked by a 3/16~" A~F nut. Release this nut and the adjustable section of the cable may be shortened or lengthened. Turn the 'T" piece anticlockwise, with your fingers, until resistance is felt. The hole in the end of the cable should line up with the hole at the bottom of the 'T' piece. Adjust the cable length so that this happens. Fit the clevis pin and split pin.

This adjustment should be done with the handbrake lever in the off position. All being equal you should now have a brake pedal and handbrake lever that do not move far when applied.

Good luck
Ian Howard

N.S.W. AUSTRALIA Austin-Healey OWNERS CLUB FLAT CHAT

January 1999

100 TECHNICAL

FITTING A VH44 PBR POWER BRAKE BOOSTER

Below are the details to fit a PBR VH44 (**See UPDATE page 3)** Power Brake Unit to a Four: -

PARTS REQUIRED ..... **(and where I got mine)**

VH 44 PBR Brake Booster ..... 1 off (a gift from a club member)
125mm X 100mm Angle Brackets ..... 2 off (Local hardware shop)
5/16" Whit X 1" Bolts & Nuts..... 2 off (" " ")
5/16" UNF Nuts ..... 2 off (In stock)
5/16" Spring Washers ..... 4 off (" ")
3/16" Steel Brake Pipe ..... 2 Metres (REPCO Wyong)
11/16" Brake Vacuum Hose ..... 1 Metre (PIRTEK Wyong)
No P3 1/8" Tail X 1/8" BSP Fitting ..... 1 off (" ")
No 62W 3/16" Pipe X 3/8" Inverted Flare Fitting..... 4 if required (" ")
No 58S 3/16" Pipe Inverted Flare Steel Nuts ..... 4 if required (" ")
Brake Fluid ..... As required (in stock)

Reconditioned VH 44 PBR Brake Boosters were available, without an exchange unit, from Hornsby Spares 4 Pioneer Av Thornleigh 9481 0602 (1997).

Drill 2 – 5/16" holes from inside the driver's footwell where shown in Fig A and both brackets as shown in Fig B and bend one bracket where shown. The one with the extra bend goes from the front of the vacuum bowl to the front of the footwell and the other one from the back of the vacuum bowl to the top of the footwell.

Loosely fit the brackets to the booster and bolt them onto the driver's footwell under the right mudguard then tighten all bolts. It's easier, if the fresh air trunking is fitted, to undo the bulkhead end and move it aside.

Remove the brake hydraulic line from the Master Cylinder to the fiveway brass fitting on the chassis. This is easier if you remove the generator.

Make up two new 3/16' **STEEL** brake lines, one to go from the Master Cylinder to the rear (top) booster fitting and the other from the front Booster fitting to the now vacant position on the fiveway fitting. Bleed the system, check for and fix any leaks.

If you don't have facilities to make the bulb type flares on the pipes, only the single type, you can fit Internal Flare Fittings No 62W – 3/16" pipe to 3/8" UNF into the Master Cylinder, fiveway fitting and Booster (2).

Drill and tap the rear aluminium Inlet Manifold, on the bend just before the balance pipe, 1/8" BSP and fit a 3/8" pipe to 1/8" BSP tail fitting. Connect the Booster to the Manifold fitting with 11/32" Brake Vacuum Hose. **DON'T USE ANY OTHER TYPE OF HOSE.**

When drilling and tapping the Manifold fill the flutes of the drill and tap with grease, this will catch most of the filings. Also remove the rear carby dashpot and piston, secure the throttle open and insert a plastic pipe connected to a vacuum cleaner and this should remove any filings that fall in.

You are now ready to road test, but be careful that first stop can be a bit of a shock. Remember that a Booster only reduces pedal pressure required, it doesn't increase the efficiency, so **the brakes will still fade if used heavily.**

If you don't feel confident with doing the brake lines, mount the booster yourself and get your Local Brakeman to connect it up.

Don Hardie 03/03/01

GENERAL ARRANGEMENT

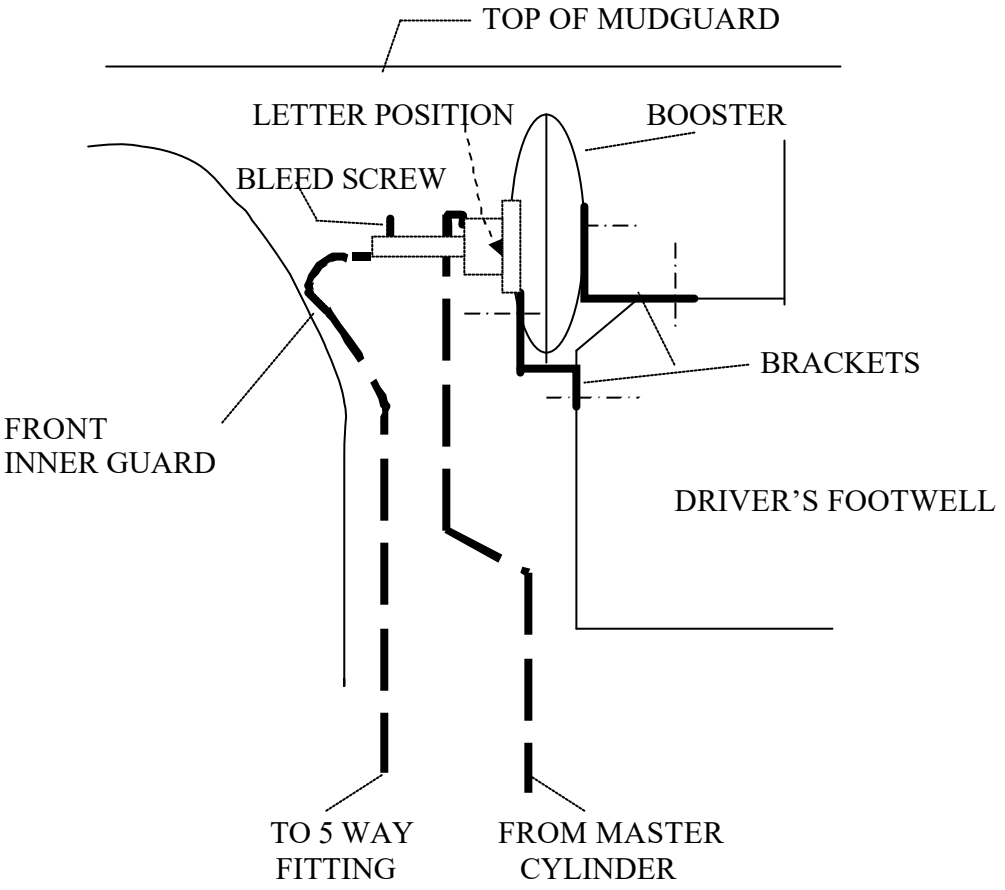

Fig A INSIDE DRIVER'S FOOTWELL

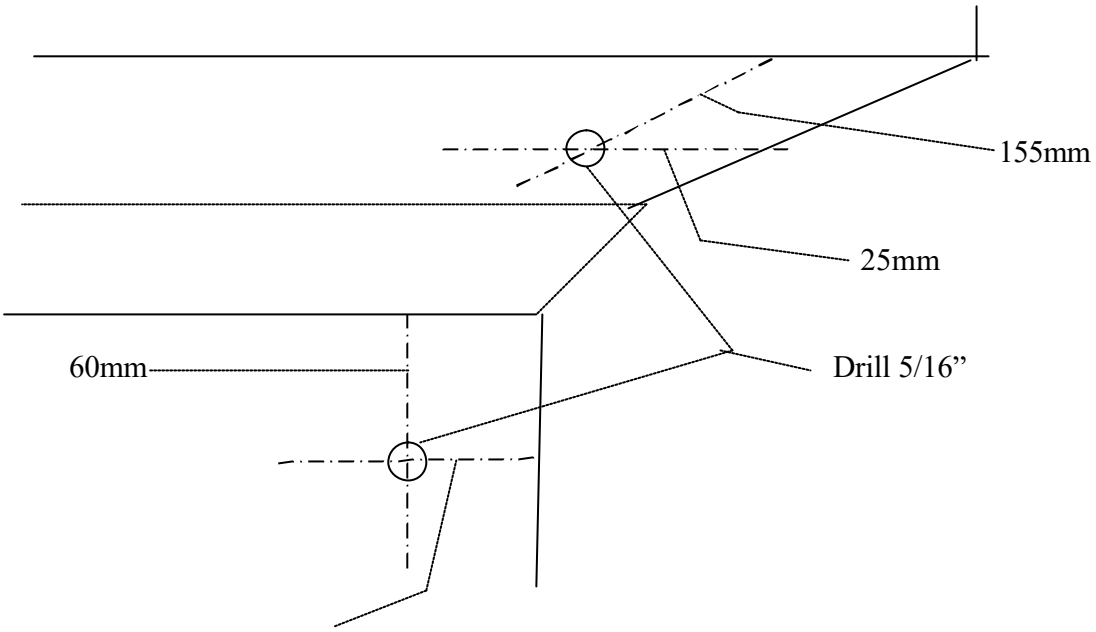

25mm or 125mm depending on which side
of the booster the front mounting studs are.

Fig B ANGLE BRACKETS 125 x 100 x 20 x 3

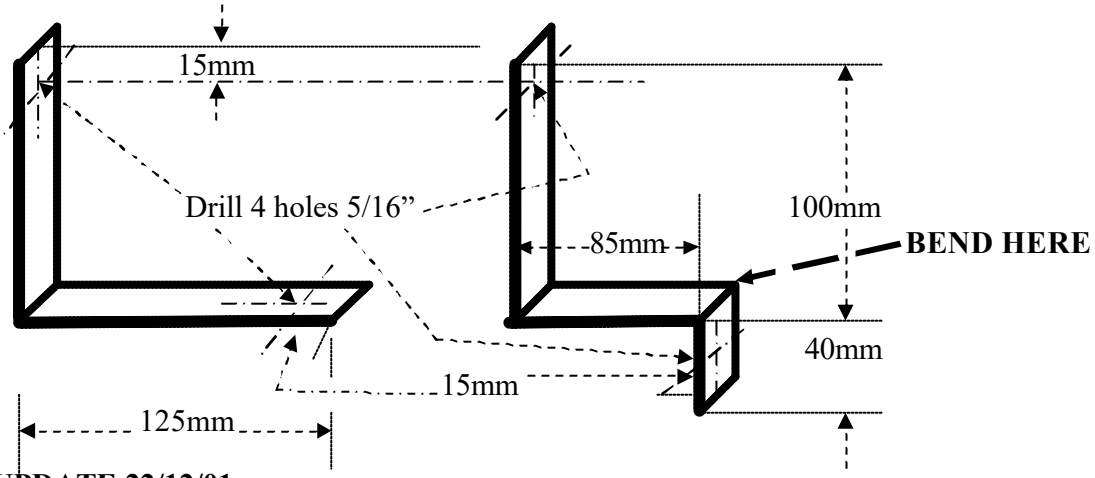

UPDATE 22/12/01

Barry Campbell has come up with some interesting information, on Brake Boosters, from Peter Mayan of VAB 9892 2166. It seems that there are four different models.

MODEL.	BOOST		IDENT LETTER
VH 44.	820 – 850.	lb/sq.in.	None
VH 44E.	1000-1080	"	E
VH 44J.	1100-1270	"	J
VH 40.	1470-1500	"	None, but larger diameter.

Peter Mayan's opinion is that the VH 44 is the best for Healeys. The letter (if there is one) is on the right hand side of the flange of the aluminium cylinder.

DRIVING & FOG LIGHTS ON BADGE BAR

The Driving & Fog Lights are Lucas 5.75" Replicas purchased from AHSpares in the UK.

Wiring up is reasonably easy as shown below. The Driving Light can only come on when the High Beam is on and the Fog can come on when the light switch is on Park/Dash or Head Light positions.

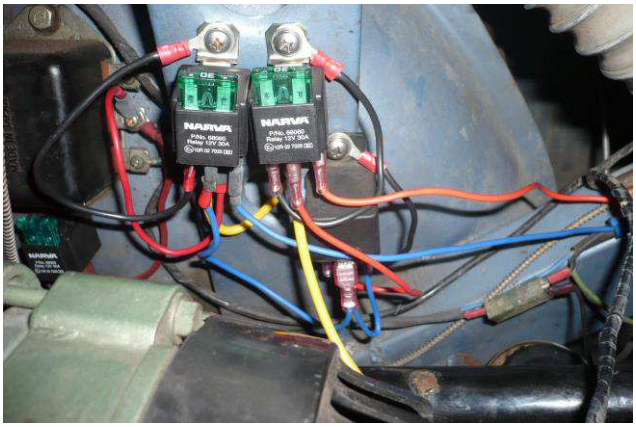

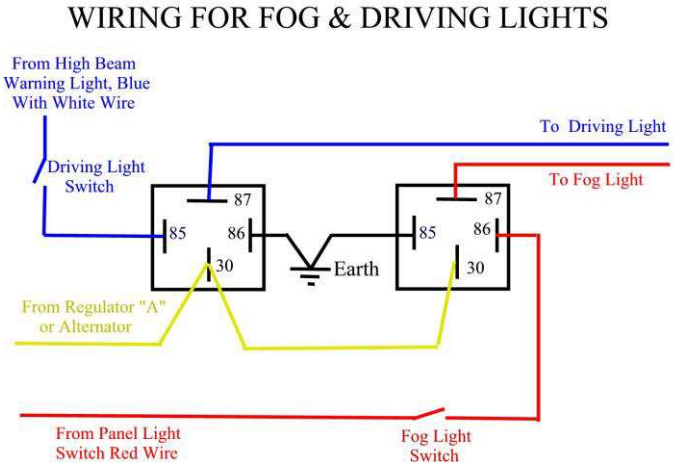

The first time I used the driving light it was great, but I thought it would be better if the fog light was on also, so I added another relay which lights the fog when the driving is on. This gives light close to the car, similar to Low Beam which is off when you are on High Beam. I must admit I always leave the driving light switch in the on position.

Switches are positioned at the bottom of the steering column cut out in the dash. Blue for Driving and amber for fog.

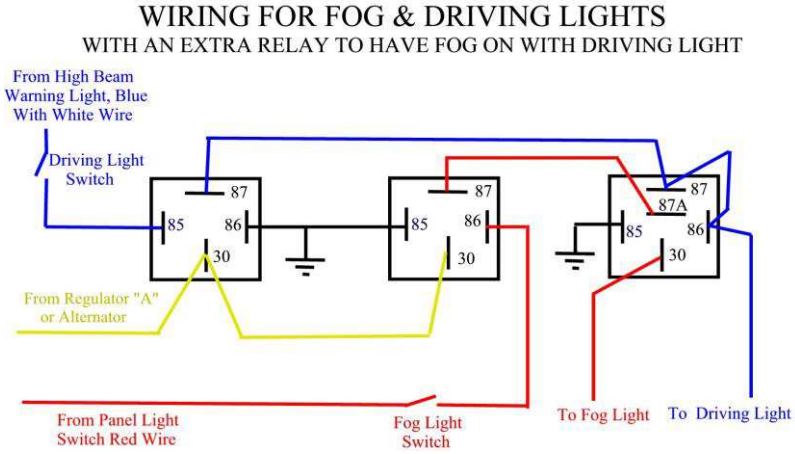

Don Hardie 03/04/2015 healeynut@hotmail.com

DUAL CIRCUIT BRAKES

For those who would like Dual Circuit Brakes, Eric Rudd has fitted VW Beetle dual circuit master cylinders to 100s. It involved a bracket and an offset pushrod.

VW Beetle dual circuit master cylinders are ¾” (19mm?) which is the same as the 100 Girling one and come in two types, one for 4 drum brakes and one for disc front and drum rear.

If you wish to fit a brake booster you would be best to fit two PBR VH44s one for front brake circuit and one for the rear brake circuit.

N.S.W. AUSTRALIA Austin-Healey OWNERS CLUB FLAT CHAT

May 1995

BRAKE SHOE STEADY POSTS
FRONT AND REAR

I noticed that the brake steady post adjustment is in the 4 cylinder manual but no mention is made in the six cylinder one. The felt bush fitted to the end of the adjusters is often missing and you may have to make some. Smear them with white brake grease or some HTB after adjustment

General

The brake shoe steady posts require resetting only when replacement brake shoes are fitted or if there is evidence of uneven wear across the width of the linings.

The steady posts, one for each shoe, are threaded in the back plate and should contact the underside of the brake shoe web. The end of the steady post, accessible at the rear of the back plate, is provided with a screwdriver slot and lock nut (Fig 1). The object of the steady posts is to hold the shoes square with the drum when in the off position. This is important to obviate any loss of travel. The shoes must be ready to contact the drum immediately without tilting and with a minimum of travel.

Fig. 1

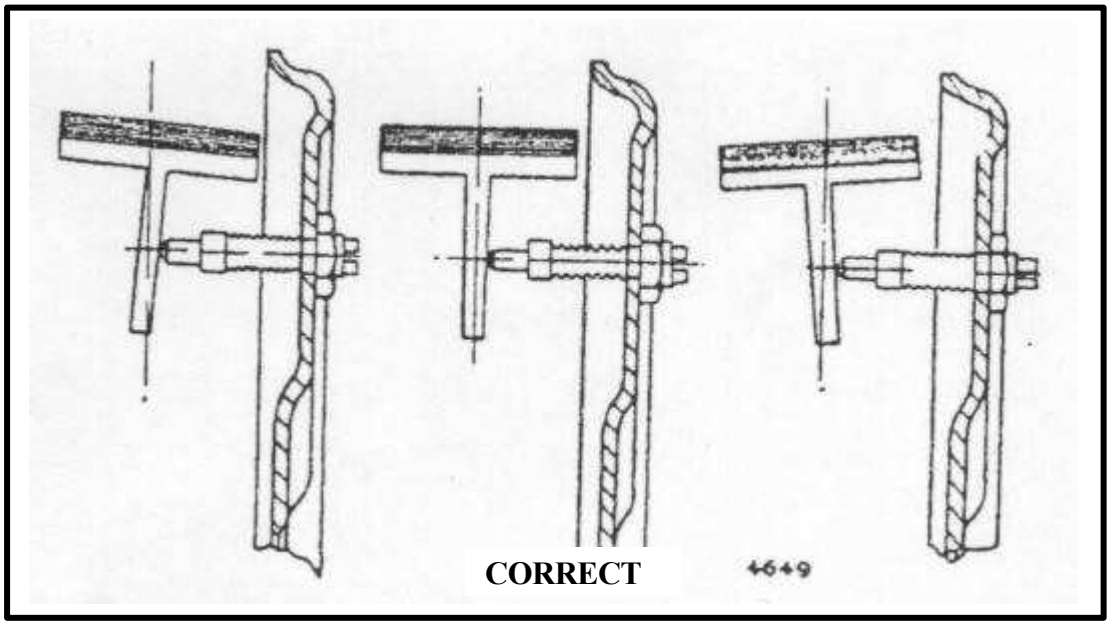

To adjust

To ensure correct location between shoes and drum:-

A. Loosen lock nut.

B. Unscrew (screwdriver in slot) the adjustable steady posts two turns (anti-clockwise).

C. Adjust shoes to the drum with the normal shoe adjusters on the rear, until the drum cannot be turned. The front shoes will require an assistant to apply the foot pedal-holding the brakes on.

D. Turn the steady post clockwise until it just contacts the shoe. Feel it touching the-shoe, it must not be hard on.

E. Tighten lock nut.

F. Adjust shoes by releasing the rear adjusters to give correct clearance between shoe and drum.

Have Fun,
Barry Campbell.

N.S.W. AUSTRALIA
Austin-Healey
OWNERS CLUB
FLAT CHAT

REAL HEALEY NATTER JUNE 1995

Oh what a glorious day it was for The All British Breakfast Run to The RSL Club at Katoomba. British Cars of many makes, Morris, Austin, Armstrong Siddeley, Aston Martin (what a beast), Sunbeam, Triumph, Hillman, Rolls Royce and of course Healey and Austin Healey, (how did that Ferrari sneak in) to mention just those that I can remember, due to being befuddled by such an early start. It really was the coldest start for some time, my blinkers stopped working at Parramatta but started again when the day warmed up on the way home at Richmond. The organisation was up to Terry and Pat Bancroft's usual high standard and I look forward their new 'baby' The British Super Sports Sunday in September.

BRAKE SHOE STEADY POSTS

Further to Barry Campbell's Technical Report on Brake Shoe Steady Posts in last months Flat Chat, I have been wearing Nylon End Caps on my Steady Posts successfully for many years (a la Rover 90). The cap is a 10mm length of 10mm dia Nylon rod with a 3/16 inch dia hole down through its middle. It fits over the end of the post, in place of the felt bush, the brake shoe web bears against it and the adjustment is done the same as before. This gives quieter operation (as most felt bushes are long gone),less friction and virtually no wear to the shoe or post. Most shoes are worn where they bear against the post so nothing is to be gained by not taking the hole right through the cap.

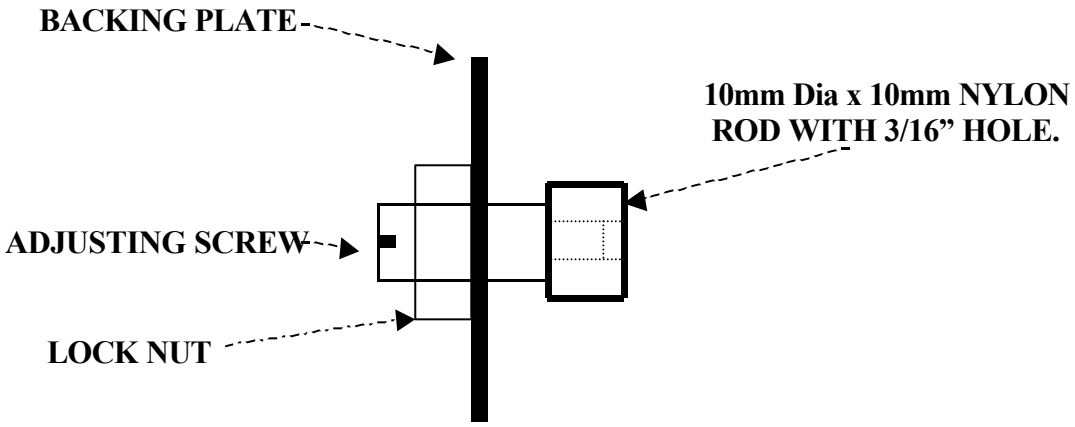

There were 9 Healeys at the Fish'n Chip Run to The Mooney Mooney Workers Club and the 8 Sixes couldn't pass the lone Four all the way down The Old Pacific Highway to The Hawkesbury Bridge. I must admit it was single lane, double line and I was stuck behind a Taxi. Where oh where were all you other Fours, I had to hold up our honour alone.

DMH 000
(THE HARDIE'S 100-4)

PS There was a Far Side cartoon in the paper recently, showing two groups of Arabs, with swords drawn, ready to do battle over which is the better, one or two hump Camels. Margo reckoned it reminded her of a club meeting with the protagonists being Four and Six Cylinder followers.

JOHN HARPER'S ARTICLES
No 14

BRAKE WHEEL CYLINDERS

INTRODUCTION

During the production life of the 100 there were a variety of changes to the brakes. These changes introduced various different wheel cylinders and it is important that the correct ones are fitted if vehicle braking is to be at its best.

The first major change came about due to BMC's rationalisation policy when the 'Austin' spiral bevel rear axle was replaced by the 'Morris' hypoid type, which was part of a family of rear axles fitted to the A90 Westminster saloon etc. This flange introduced wider rear brakes, increasing the width from 1 ¾" to 2 ¼". Later type single piston rear wheel cylinders were introduced as part of this change.

Curiously the front brake width remained at 1 ¾" resulting in a front to rear braking area ratio which is contrary to that generally accepted as good automotive engineering practice. This situation was not corrected until the introduction of the BN2 two pistons.

To compensate for the front to rear braking imbalance that resulted the front wheel cylinder diameters were reduced from 1" to 7/8", a reduction in area of 77%. Exactly how this change restored braking ratio would take a lot of space to explain. However the result with one piston was successful although no benefit was derived from the larger rear brakes.

The second significant change came about with the introduction of the BN2. The front brakes were increased in width to 2 ¼" in line with the rear brakes and the front wheel cylinder reverted to 1" diameter. At this point the full advantage of the wider rear drums was realised and the 100 brakes were greatly improved. Stopping power was already more than adequate when the brakes were cold; the real advantage came in terms of less fading the car was driven hard.

SUMMARY

BN1 FOUR STUD REAR END

1" diameter front wheel cylinders. Early 1" rear wheel cylinders with two pistons.

BN1 FIVE STUD REAR END

7/8" diameter front wheel cylinders. Later 1" rear wheel cylinders with one piston.

JOHN HARPER'S ARTICLES
No 14

BN 2 FIVE STUD REAR END

1” diameter front wheel cylinders. Later 1” rear wheel cylinders with one piston-

WARNING

From the above description it can be seen that if the wrong combination of wheel cylinders are fitted to your 100 then braking could be seriously impaired.

My advice is don't take any risks and check your car if you have any doubt.

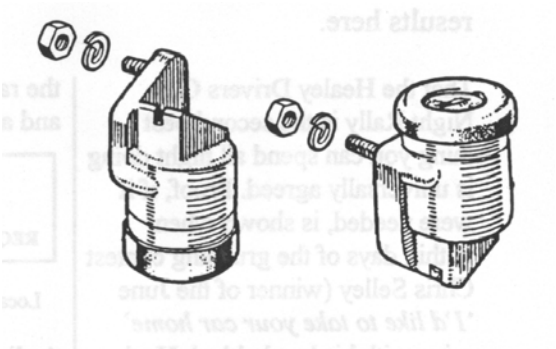

Typical Front Wheel Cylinders

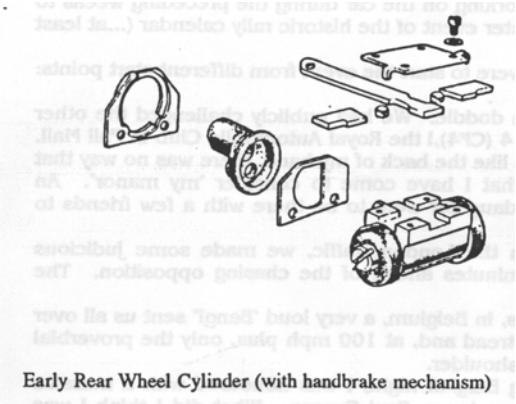

Early Rear Wheel Cylinder (with handbrake mechanism)

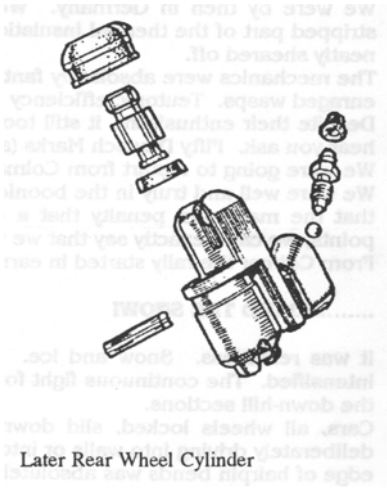

Later Rear Wheel Cylinder

JOHN HARPER'S ARTICLES
No 14

DESCRIPTION	GIRLING	BMC	CASTING
Front Wheel Cylinder 1" Left Hand	390332W	7H 4583	303300W 412890 H0 3627
Front Wheel Cylinder 1" Right Hand	390333W	7H 4584	303310W H0 3728
Front Wheel Cylinder 7/8" Left Hand	390320W	7H 4644	303200W 412660
Front Wheel Cylinder 7/8" Right Hand	390321W	7H 4643	303210W 412760 H 3063 H 3433
Rear Wheel Cylinder, early type with two pistons. Left Hand	390150W	7H 4597	301300W 412830 H0 3541
Rear Wheel Cylinder, early type with two pistons. Right Hand	390151W	7H 4598	301310W 412840
Rear Wheel Cylinder, later type with one piston	390450W (use 64674374)	7H 4988 (use 17H8081)	1" 304340 1" 6-673977

REPAIR KITS

DESCRIPTION	GIRLING	BMC
Front Wheel Cylinder 1"	SP 1215	8G 8145
Front Wheel Cylinder 7/8"	SP 2049	8G 8158
Rear Wheel Cylinder, early type with two pistons.	SP 1215	8G 8145
Rear Wheel Cylinder, later type with one piston	SP 2018	8G 7067

UNIPART have not serviced our wheel cylinders for many years and the best chance that one has of obtaining spares is through a GIRLING agent. Therefore these numbers are listed below. Although these part numbers are used for ordering they are not necessarily the numbers that a on the cylinder. These 'casting' numbers are also included but please note that there could well be additional, numbers to those listed.

DISCLAIMER: Whilst every effort is made to check the information incorporated in this series, no responsibility can be accepted for errors. However, corrections, improvements, suggestions & additional information will be very welcome (in writing please).

 To contact the author please write to him at: 7 Cedar Avenue, Ickleford, Hitchin, Herts. SG5 3XU. or Telephone 0462-51970.

100 TECHNICAL
CABLE THROTTLE

The cable throttle conversion consists of two pulleys, an outer cable socket, an outer cable adjuster, a bracket to hold the adjuster at the rear carby, an inner and outer cable and a cable clamp.

Replace throttle pedal arm with the 3" pulley. Drill the pulley and fit the ball from the pedal arm if you are using the throttle switch.

Drill a 3/8" hole in the inner vertical face of the driver's footwell as shown in Fig 2 and fit the outer cable socket (Fig 3) on the engine bay side.

To fit the 2" pulley to the carby throttle cross-shaft on H4 & H 6 carbys, undo and slide the connectors to remove the shaft. For the HS 6 both carbys have to be taken off the manifold to free the cross-shaft and one connector removed to fit the pulley, then replaced.

While the carbys are off, if necessary, replace the top two studs on the rear manifold that will hold the adjuster bracket with longer ones.

Fit the bracket to the top studs of both carbys (H4) or rear carby studs (H6 or HS6) and drill & tap hole for cable adjuster to line up with pulley groove.

Cut the cable outer to length so that it is just under the inside of the bonnet when it's closed.

Fit the inner but don't cut it until you are sure everything is ok. If you can, solder the cable where you are going to cut it, this will stop it fraying.

If you are fitting an extractor at the same time you may have to re-arrange the pull off springs. Two spring brackets are shown, which one, depends on the position of the hole on the Carby arms.

NOTE :- A soft conversion to Metric can be used except for the centre holes in the pulleys and centre to centre distance of the holes in the carby bracket.

LIST OF PARTS

3" Aluminium pulley	Fig. 1	You will have to get these machined
2" Aluminium pulley	Fig. 1	" " " " " " "
Rear carby bracket	Fig 2A & 2B	Can be made up in the home workshop if you have a welder.
Outer cable socket	Fig 3	Can be made up in the home workshop
1 off 3/8"W x ¾" Bolt, spring & flat washers.		
Outer cable socket drilling position	Fig 4	
Outer cable adjuster	Fig 5	Pushbike brake one will do nicely.
Inner and outer cable (Abt. 1M Long)		Rear pushbike brake cable.
1 Cable clamp		Midel –Part No AUE 34
2 Springs (if required)		Midel –Part No AEC 2075
Spring holding bracket (if required)	Fig 6	Can be made up in the home workshop
2 Spring holding brackets (if required)	Fig 7	Alternate (" " " " ")

DIAGRAMS ARE NOT TO SCALE.

Fig 1 - 2 Pulleys - one 3” Dia. the other 2”Dia.

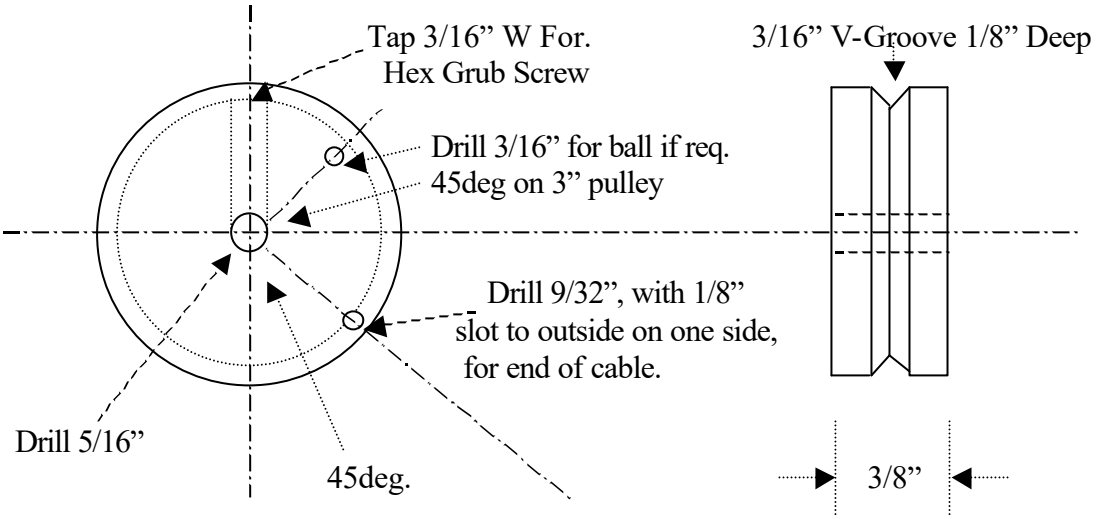

FIG 2A. REAR CARBY BRACKET FOR H 6 & HS 6. 1” X 1/8” STEEL BAR

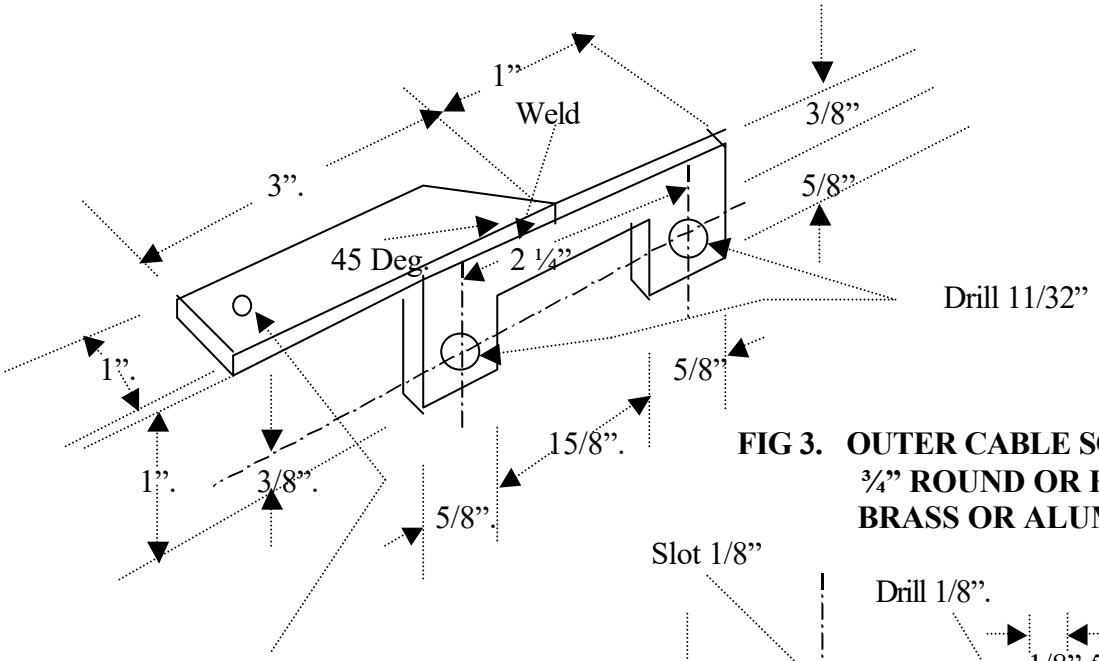

FIG 3. OUTER CABLE SOCKET
¾” ROUND OR HEX
BRASS OR ALUMINIUM

Drill and tap to suit size and.
position of cable adjuster.

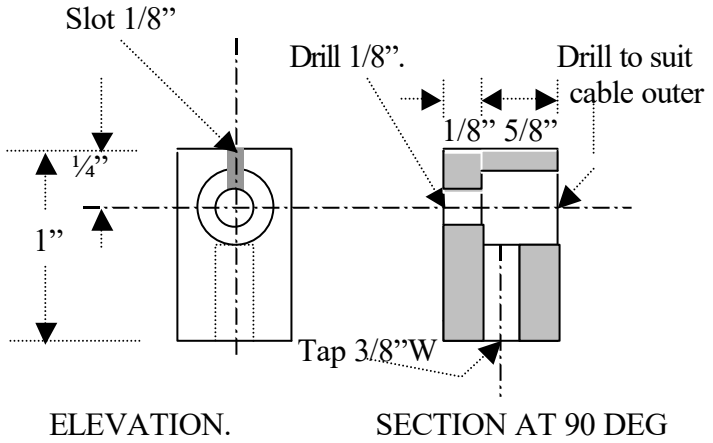

Fig 2B. CARBY BRACKET FOR H4 1” X 1/8” STEEL BAR

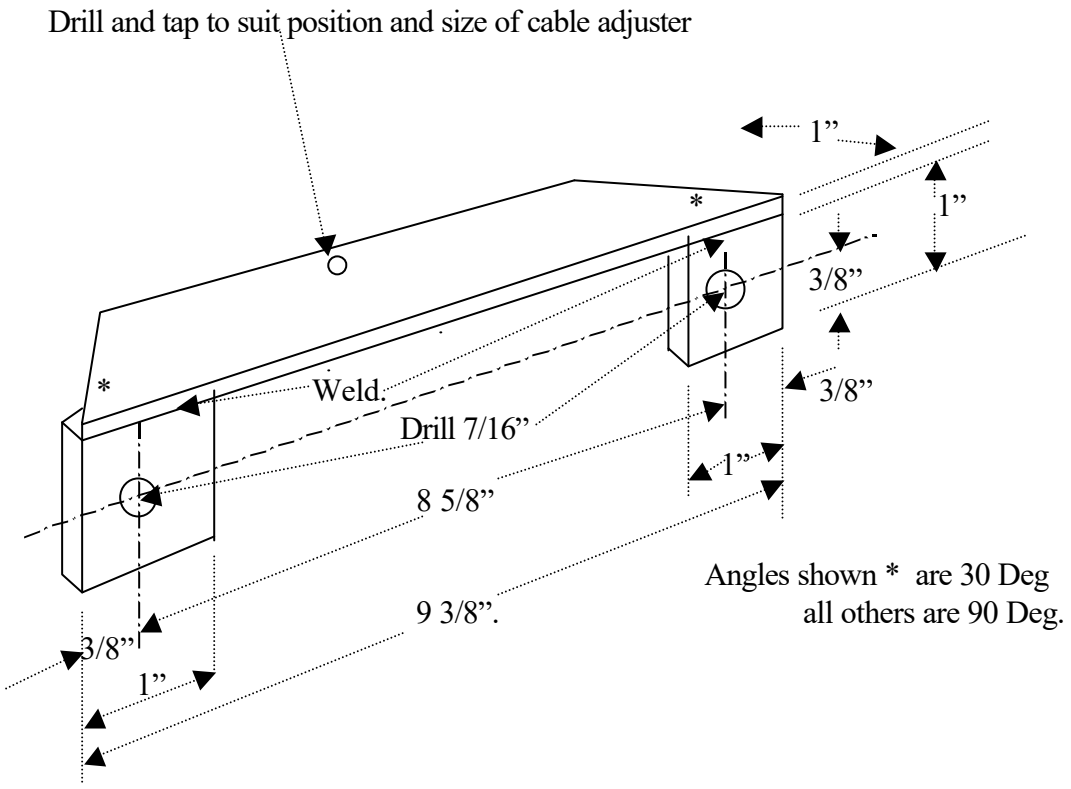

FIG 4. INSIDE LEFT SIDE OF DRIVERS FOOTWELL.

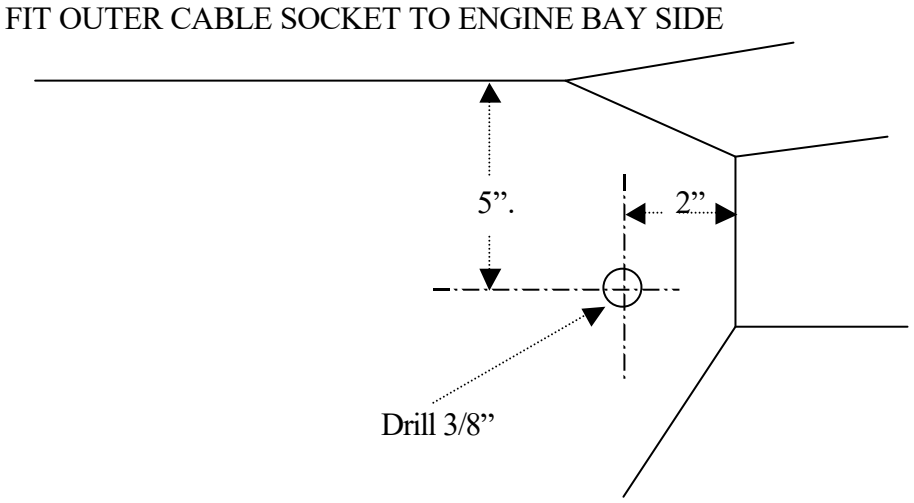

FIG 5 CABLE ADJUSTER

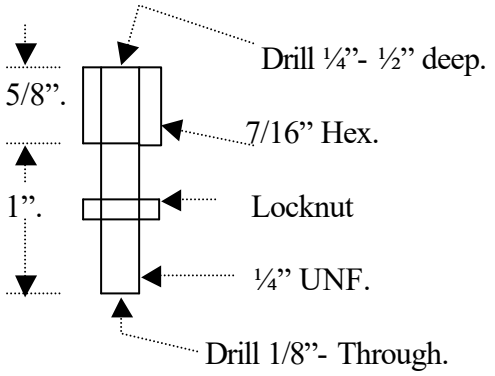

OR PROPRIETARY CYCLE ONE ABOUT THIS SIZE

FIG 6 SPRING HOLDING BRACKET

1” X 1/8” Bar
Bolts on to Cam Follower Cover

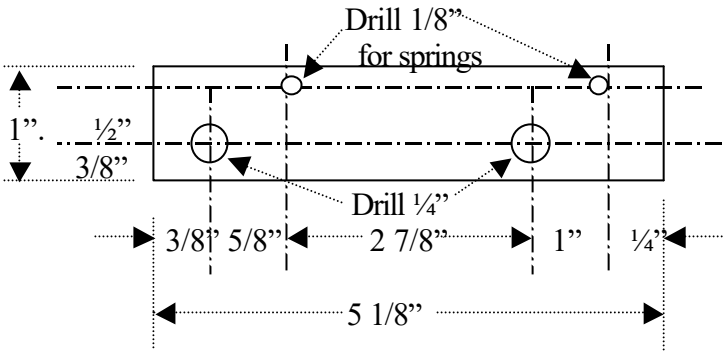

FIG 7. ALTERNATE SPRING BRACKET (HS 6).

Make from 1&3/8” x 1/8” Bar
2 off - Bolt onto lower inner Carby studs.

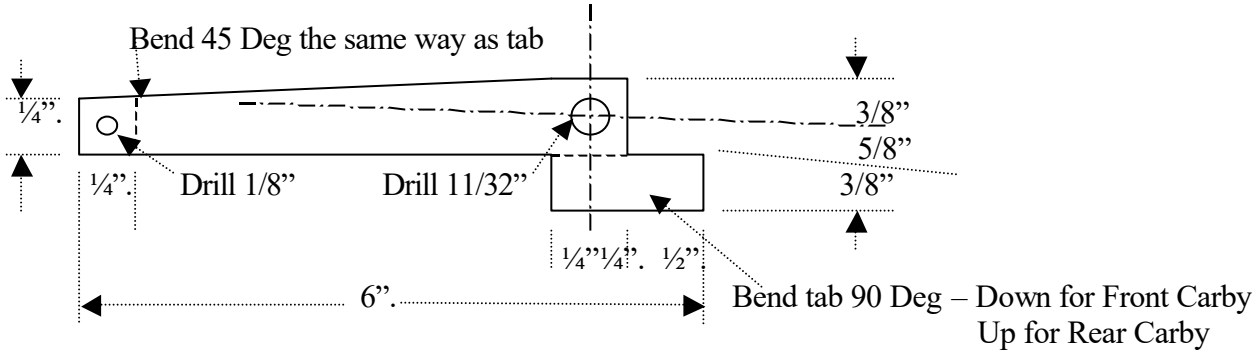

TECHNICAL REPORT

THERMOSTATS

There will be a technical session at Neville Stirton's Radiator Workshop on Sat 21 September. You will be able to find out how to keep the engine temperature down in your Healey by attending to details of your cooling system. The latest information on thermostats is the TRIDON TT2028. This has an 0.D.of 54mm(no need to cut down) and operates at 77C (170F). This has a larger I.D. of 34mm, which is close to the original bellows type thermostat allowing greater flow at idle. Bring your Healey and have the temperature gauge checked against a thermometer.

Rear seals for six cylinder engines are selling well and I have only five left in stock. Plenty of sender unit modification kits available (stops your fuel gauge getting the wobbles) and if you give me your unit I'll fit it for you – FREE.

Digital Multimeters with Tacho and Dwell measuring range available at better than Half price, at $40.00 – ten sold ten left.

REGULATORS

Another regulator went up in smoke on Peter Osborne's 100. Luckily he got home to Avalon just as battery went dead. He'd been driving without charging the battery and for the last hour or so with headlights on so there was nothing left in the battery to cook the generator. Fortunately for Peter, Eric Rudd lives just around the corner and came to rescue.

New replacements for these regulators are around the $100.00 mark so I suggest you look at the cutout and voltage regulator points and clean them according to the manual or have the regulator checked by an auto electrician. This should be done every 12,000-Miles along with the generator brushes and bearings.

CALCULATE MPG

If you are calculating MPG here's an easy formula -
M divided by L divided by 0.22 = MPG
Example:
You fill up with 45 litres and the trip meter shows 250 miles.
250 divided by 45 divided by 0.22 = 25.25MPG
To calculate litres per 100 kilometres use -
L divided by M divided by 0.0161 (then take away the first number you first thought of!)

Example; (with figures as above)
45 divided by 250 divided by 0.0161 = 11.18 litres per 100k

HAVE FUN,
BARRY CAMPBELL

N.S.W. AUSTRALIA Austin-Healey OWNERS CLUB FLAT CHAT

September 1996

Remove wheels and clean around spoke ends on both INSIDE ends of the hub a full 360 degrees (see sketch)

When clean and dry, wipe a liberal amount of SILASTIC (clear) over and around spoke ends, blend material from one spoke to the next to form a collar completely over all ends. A moistened INDEX finger will smooth material for a neat finish.

Keep material away from splines and inner locating seats of hub and knock on nut seat areas. (NUMBERED 1-2-3.)

Allow material to cure.

Replace wheels and tighten knock ons.

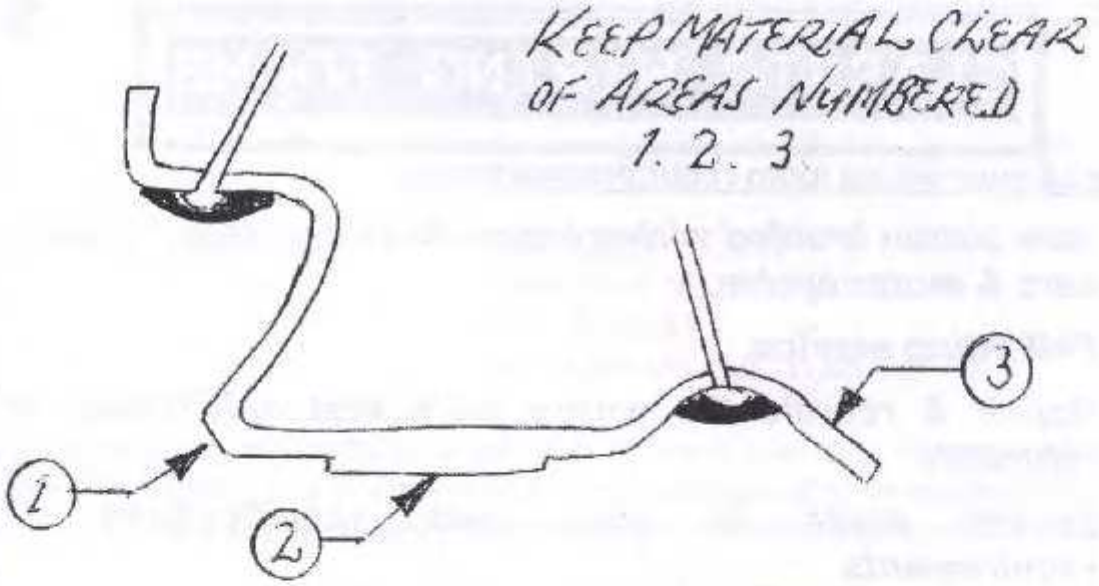

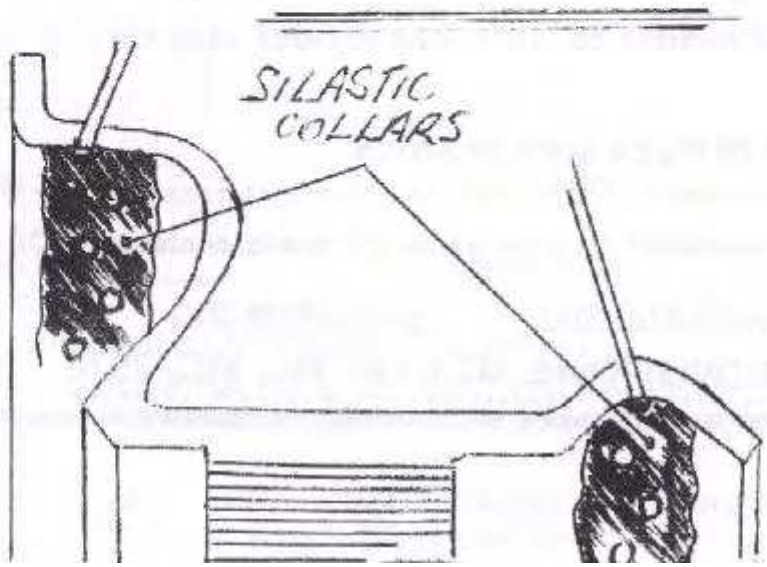

GROSE JETS

In the early ‘90s after years of SUs flooding in Rovers, a Sprite and then the 100, I fitted a pair of Grose Jets. I fitted them to the original HS4s and then to the HS6s I have on now, and haven’t had any flooding since (about 50,000miles).
They are available from SUMidel in Sydney. http://www.sumidel.com/ Phone 1300 350 351

A Grose Jet is simply a valve that uses two balls, the inner one on a circular seat and the outer one is contacted by the float. Unlike a needle valve that can become stuck in its chamber, the balls in a Grose Jet can’t. As the float in the petrol chamber rises, it will eventually meet the two pronged fork, as this rises, it will push against the outer ball, which pushes against the small ball, forcing it onto the seat stoping the flow (in the later carbs the float contacts the outer ball). According to the patent, they cope with higher inlet pressures, eject dirt particles, improve high speed running, and don't stick or dribble.

Don Hardie 18/05/2009

Diagnosing and Fixing **Handbrake Problems**

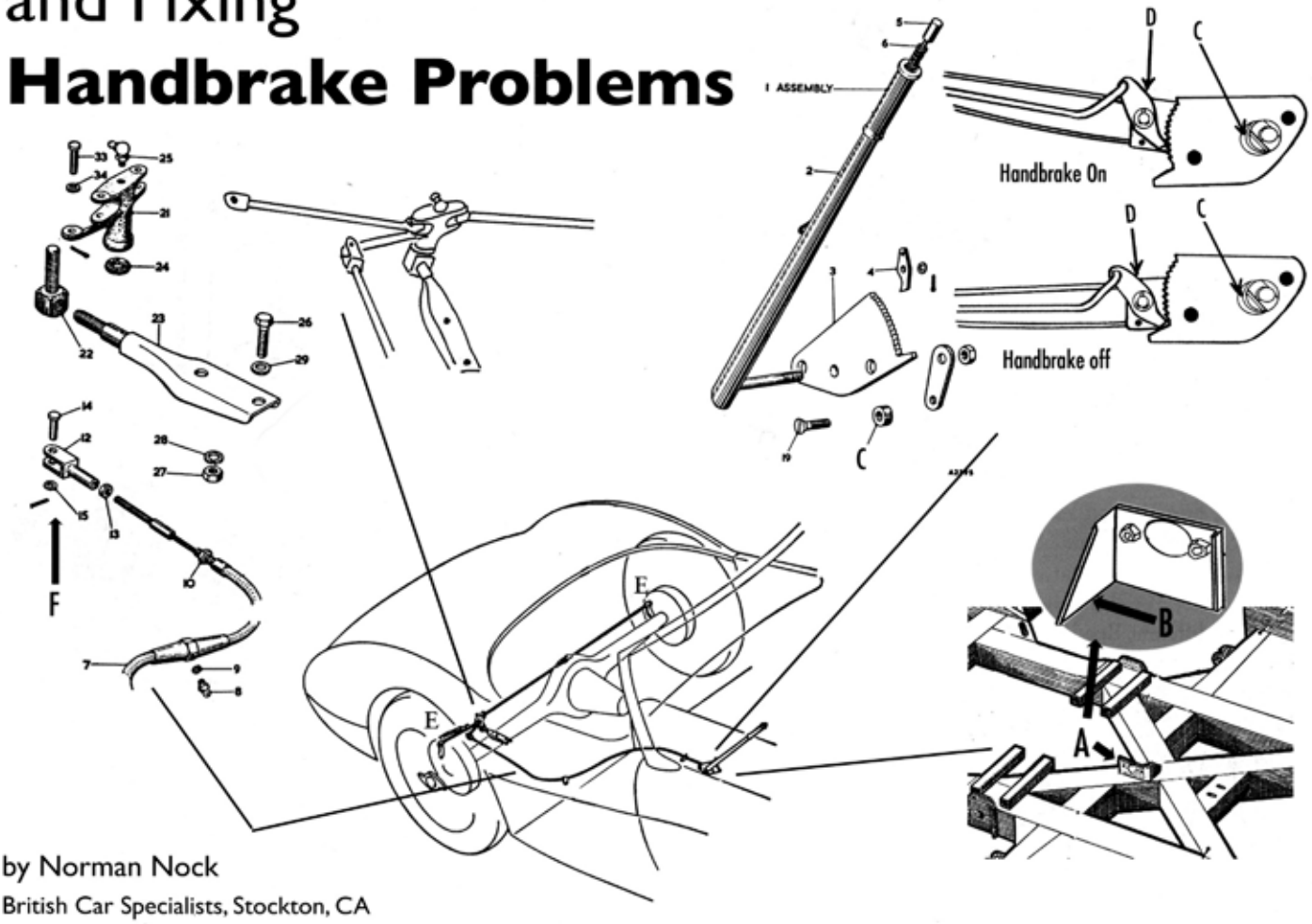

by Norman Nock
British Car Specialists, Stockton, CA

The hand brake, or emergency brake, was one of the few parts on the big Healey that didn't change in its design and operation from beginning to end of the Healey's production run.

Operation was simple and can easily be followed by looking at the above diagrams.

By pressing on a button at the top of the hand brake lever, the driver releases a pawl (D in the diagram) so that the lever can be pulled up easily. As the handle is pulled up, it rotates around a pivot through a bushing in the hand brake base (C in the diagram), causing a small lever fastened to the pivot to pull on the brake cable.

As the cable is pulled, the other end causes a swivel fastened to the rear axle to rotate, which in turn pulled two levers that caused the rear brake shoes to press against the brake drums.

When the button on the handle is released, the pawl engages a ratchet near the pivot, holding the lever in place and keeping the rear brakes engaged.

However, even a simple mechanism like this can have its problems. Typical brake problems include: the lever can come up too high, it can be sloppy in operation, it can be frozen and refuse to move, or it can pull up and down without engaging the brakes. Norman Nock takes us through these one at a time.

Lever Comes Up Too High

The lever should come up only three clicks before beginning to engage the brakes. If it comes up too high, it's a sign that an adjustment is needed in either the brakes or the hand brake cable.

Start by adjusting the brake shoes. First remove the clevis pins from the levers on the backs of both brake drums (E in the diagrams above). Adjust the rear brakes using the square peg located on the back of the brake drum backing plate. Turn the pegs clockwise one click at a time until the brakes drag. Then back off the peg just enough so that the wheels turn freely, and reconnect the clevises to the brake levers.

Once the brake shoes are adjusted, the hand brake movement can be adjusted.

With the handbrake off, as shown in upper right figure, the pawl (D) should be engaged in the bottom of the ratchet teeth. If the release button is pressed in and the brake lever is pulled up too far, the pawl may over-ride its stop and get caught up too high.

If the lever and rear brakes are properly adjusted, this should move up only three clicks before the brake shoes start to drag. If not, you will need to remove the clevis pin from the rear end of the hand brake cable (F on the diagram) and screw in the fork of the clevis two or three turns. Be careful not to turn the inner hand brake cable when turning the fork. Reconnect the clevis and check the lever adjustment again. Readjust if required.

Hand Brake Pulls Hard or Not All

If the hand brake is difficult or impossible to pull, it may indicate that the brake cable is frozen or the grease inside has solidified, a problem that is often encountered on cars that have been parked for many years.

To correct this remove the brake cable from the car and soak it in solvent for a few days, then use a grease- gun to free it up. If the cable is rusted or frayed, then it should be replaced. In use, the cable should be greased every time the rest of the car is, using the grease fitting in the middle of the cable.

Frozen or Sloppy Hand Brake Lever

The hand brake lever is, bolted to a bracket (A In the diagram and shown from the opposite slde in the inset detail) that is welded to the main chassis rail. Over time if the bushing around the pivot (C in the diagrams} has frozen from rust, and the weld at B was bad, a hard yank on the lever could have broken the weld completely, so that the brake lever moves around In a sloppy fashion.

If Inspection shows that this bracket is loose, the brake lever should be removed, all rust and grease cleaned away, then the drive shaft can be temporarily removed and the bracket can be electric welded back to the frame.

Broken Lever Rod

The hand brake lever assembly itself, consisting of the lever, pawl, rod, spring, and release button, can be broken when it is being dissembled. In particular, as you remove the pin that connects the rod to the release button, the rod can break at the small hole in the rod where the pin goes through it. Replacement parts, including the rod and button, are readily available.

Handbrake Doesn't Hold Securely

When the driver pulls the brake lever up, he should press the lever release knob down to release the pawl (D). If the release knob is not pressed then the pawl drags across the teeth causing the pawl to wear, which can eventually prevent the lever from engaging securely with the brakes on. If this is the case the pawl and possibly the hand brake base, might have to be replaced.

Sticking or Broken Rear Swivel Linkage

The swivel linkage on the rear generally gives very little problem. If it doesn't seem to be operating correctly, and certainly when work is done on the rear end, it can tie disassembled, cleaned and greased.

Note that it has a grease fitting on top and should be greased during normal maintenance to keep it operating correctly.

Editor Note: The above article was reprinted with permission from British Car Specialists, (209) 948-8767. If you are contemplating this project for your Healey, contact Mark Schneider who recently completed it on his BJ8.

REAL HEALEY NATTER

OCTOBER 1995

CAR ADD QUOTES

This months dribble comes under the Heading "Stop Me If You've Heard This One". In a recent W.A. BMW (That name rears its head again) Club's Magazine there was a list of descriptions as used in car adds and their translations. I have extracted (and modified a few) of those that relate to Healeys.

WIFE FORCES SALE -She's sick of it breaking down.
SUIT ENTHUSIAST - Complete idiots only.
RIPE FOR RESTORATION - Pile of junk.
SUIT COLLECTOR - Big pile of junk.
SERIOUS COLLECTORS ONLY - Even Southerby's couldn't believe the asking price.
STORED FOR 10 YEARS - Under boat house in beach suburb.
P.O.A. - Pile of ashes.
INCOMPLETE - All the parts left over from my last rebuild.
NEEDS FINISHING - I shouldn't have bought an INCOMPLETE car.
NEARLY COMPLETE - Just needs an engine, gearbox, axle and wheels.
90% COMPLETE - See NEARLY COMPLETE.
95% COMPLETE - I lost a lot of the bits on my last house move.
99% COMPLETE -I failed maths at school.
SPARES INCLUDED - Boxes of old gaskets, filters and other used junk.
NEEDS RINGS - Completely worn out.
ROLLING CHASSIS - Haven't found an engine for nothing in 12 years.
HARDLY USED - Used hardly.
USED ONLY AT WEEKENDS - At Amaroo, Eastern Creek, and Wakefield Park etc.
COMPETITION HISTORY - Written off at Warwick Farm and then left out in the bottom paddock until now.
RACING TRIM - I've sold the lights, windscreen and exhaust.
IDEAL INVESTMENT - I also sell Qintex shares.
APPRECIATING ASSET - See IDEAL INVESTMENT.

DMH-000
(THE HARDIE'S 100-4)

P.S. I have received a reprieve. Don bought 2 packets of Smith's Crisps, with the new competition detailed on the packet, and didn't win the 100-4 first prize. This is a BRG Healey Factory restoration which is at present ensconced in Eric Rudd's workshop. Please some one win this car so I can retain my pre-eminent place in our garage.

CHANGING BATTERY POLARITY
Make your Healey think negative

Article submitted by Dale Beal - reprinted from Dec. '83 Sports - GT Market

Somehow when the British started making automobiles, they managed to install the wiring harness upside down or backwards in doing this they invented "positive ground electrics. This novel approach to wiring has obvious drawbacks in the modem world of cassette radios, CB, and other automotive accessories powered by 12-volt negative ground batteries.

You can enter the world of modem motoring by converting to negative ground using the following step by step instructions. The entire process should take about I hour.

#I - REVERSE THE BATTERY (S).

Disconnect your battery and rotate it 180'. You will probably have to change the terminals on the ends of your cables. Now, reconnect your battery the negative post of the battery should now be connected to ground.)

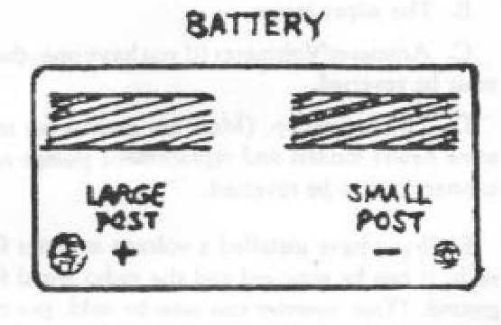

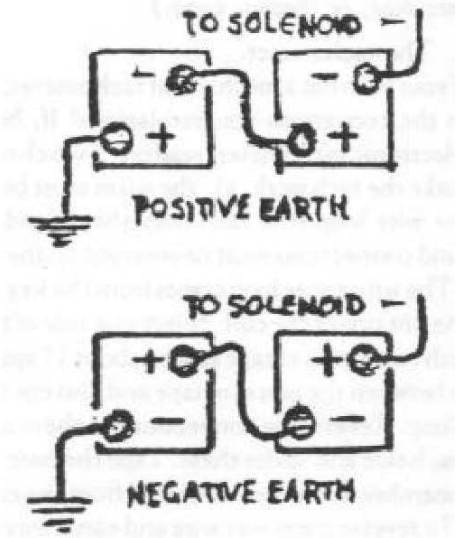

#2. REVERSE THE COIL CONNECTIONS.

If the coil is original, it will be marked "CB" (Contact Breaker) and "SW" (Switch). The "SW" should now be connected to the distributor. If your coil is marked +/ -, the negative terminal should be connected to the distributor.

At this point, you may want to test the other electrical items on your car. They include:

A. The heater motor.

B. The wiper motor.

C. Ammeter/Voltmeter. If you have either, the connections must be reversed.

D. The fuel pump. Most are insensitive to polarity but some newer models and replacement pumps may require the connections to be reversed.

E. If you have installed a voltage inverter for radios and such, it can be removed and the radio wired for negative ground. (Your inverter can now be sold, put on a shelf to gather dust, or thrown away.)

F. The tachometer.

If your auto has a mechanical tachometer, you are finished with the conversion congratulations!

If, however, you have an electronic tachometer (BJ 8) read on.

Two changes are necessary to make the tach work. a). The wires must be reversed at the white wire loop (the tach horseshoe); **and** b) The power and ground connections must be reversed on the inside of the unit.

A. – The white wire loop comes from the key switch and travels to the hot side of the coil. Select one side of the wire and tag it with two pieces of tape spaced about 1" apart. Then cut the wire between the pieces of tape and also cut the other side of the loop. Reverse the connections so there is one piece of tape on each side and solder them. Tape the bare sections of wire. (Remember this is the power lead from the coil and is **unfused**.) B --To reverse the power wire and earth wire on the inside of the unit, it is necessary to remove the chrome ring, the glass face and the glare shroud. Then remove the two screws on the back of the unit that hold the internals to the case and allow the internals to drop carefully into your hand. DO NOT BEND THE NEEDLE! The spade terminal which carried the green or white wire is the power lead. Next to it is the ground connection. One of the new leads is a resistor (looks like a cigarette filter with a wire at each end). Disconnect the resistor from the lead it is hooked to and solder it to the other lead.

Likewise, disconnect the wire from that lead and connect it where the resistor was connected. In short, reverse the connections. Reassemble the unit (clean the glass)

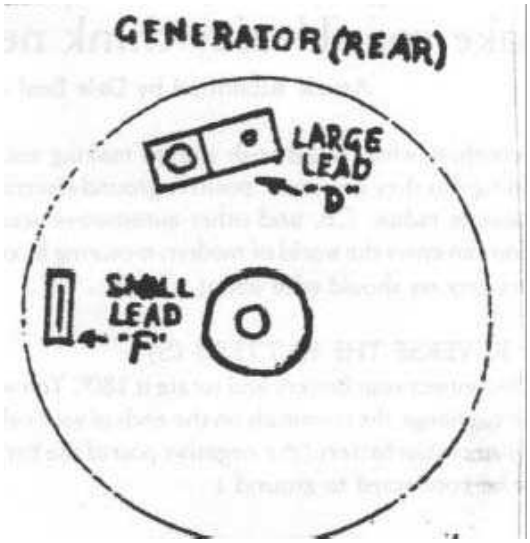

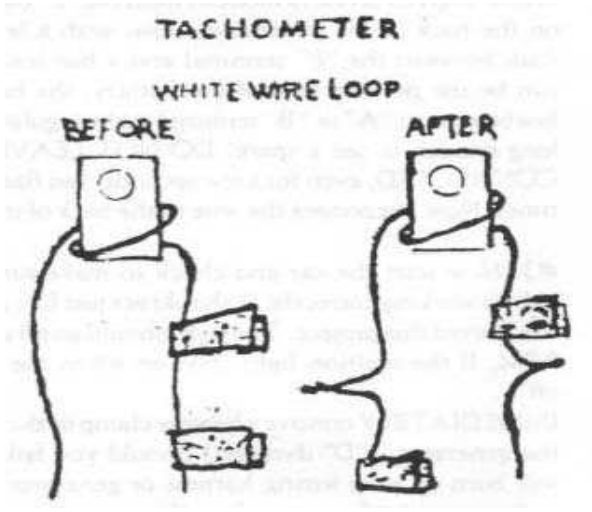

#3. POLARIZE THE GENERATOR.

Remove the lighter gauge wire (usually brown w/green or yellow w/green on early models) from the "F' (field) terminal on the back of the generator. Now, with a length of wire, flash between the "F" terminal and a hot lead. The hot lead can be the positive post of the battery, the hot lead on a fuse box, or an "A" or "B" terminal at the regulator. Flash just long enough to see a spark! DO NOT LEAVE THIS CONNECTED, even for a few seconds! Just flash it a couple times. Now, reconnect the wire to the back of the generator.

#4. Now start the car

Now start the car and check to make sure the ignition light is working correctly. It should act just like it did before you started this project. The light should go off at about 1000 RPM. If the ignition light stays on when the car is turned off , IMMEDIATELY remove a battery clamp or the large wire on the generator ("D" dynamo). Should you fail to do this, you will burn up your wiring harness or generator or both! Some words of caution; the voltage regulator has a limited lifetime, and sometimes, if the unit is about ready to fail, the change in polarity will push it over the edge.

Congratulations you have now converted your Healey to negative ground.

NOTE:

Items #3, #4A and #4B, I did not have to do on my 100-4, or BJ 8, but check these steps for safety precautions. I did this procedure on my 100-4 and BJ-8 that I drive daily, and have had no problems.

This article is republished from a recent issue of Healey Motor News, the magazine of the Austin-Healey Club of Southern California.

Polarising is simply putting current of the correct polarity through the field winding to establish the desired residual magnetism. To do this disconnect the field connection (the smaller connector) and connect a length of wire temporarily between this terminal and the battery circuit, either the "A" on the control box or Al on the fuse holder. Circuit 33, colour BROWN. There may be some small sparks and this is to be expected, as about 2 amps will be flowing. This can be checked if you have an ammeter, but is not important. Take the usual precautions when making this connection on for about 10 secs and repeat a few times "for luck". Leaving it on for longer will do no harm except eventually run your battery down.

All that is left is to remake the connections, start the engine and check that the "ignition" lamp goes out. If the dynamo is the correct type and is replacing a correct one the control box should not need checking. If it does this is covered in the workshop manual

JOHN HARPER'S ARTICLES

No 2 (Part)

Changing to Negative Earth

A few owners have enquired about changing their cars over to negative earth in order to fit modern electrical devices, such as radio cassette players. My first suggestion is not actually to do this at all but to go for one of the polarity conversion devices that are on the market and leave the car in its original authentic state. If this suggestion is not what is required the details of what needs to be done are listed below. The actual changes necessary are:

Reverse the battery connections

Reverse the connections to the ammeter if fitted Change over the coil connections CB and SW

Re-polarise the dynamo (see separate article below)

All other units including the control box will work with either polarity.

If, modern accessories with permanent magnet motors have been fitted already such as

Electric screen washers

Electric radiator cooling fans

Replacement wiper motors or heater fan motors

then these may well have to have their connections reversed.

Finally, if you do change over the original positive earth to negative earth then I recommend that a clear warning label be displayed.

Dynamo Polarising

Before fitting a new or replacement dynamo to our cars it is important to check the polarity. Sometimes there is a label stating this on new or factory replacement units, but there never seems to be any explanation on how it is done. First a brief technical explanation. The dynamos fitted to our cars are capable of producing a charging current whether the car is positive earth or negative earth, what decides whether the dynamo produces a positive or negative voltage is called residual magnetism. Dynamos do not normally have permanent magnets and rely on a small amount of magnetism left in the field and yoke to get the dynamo "started". When voltage is produced this is fed back to the field windings and full output current is then available. So in simple terms the polarity depends on the small amount of magnetism left from the last time the dynamo was used. In normal use this is not a problem but if the dynamo is changed we have to deal with it. There are two approaches, test or change. In practice if the test shows the polarity to be wrong then a change will be necessary so it is best to concentrate on this, but before doing so it is worth summarising what might happen if the dynamo is the wrong polarity and nothing is done about it. What is going to happen is that the battery is at 12 volts and the dynamo will produce voltage in the opposite direction, which will add to the 12. The first indication will be that the "ignition" not charging warning lamp will glow brighter until it gets 22 volts across it. At this point the contacts in the control box will "make" with this voltage across them and an extremely heavy current will flow from the battery through the control box and the dynamo. The battery is likely to win and the dynamo will be forced to the correct polarity but at the risk of damage to components and wiring. The charging warning bulb is also likely to have been burnt out as well. The message is don't risk it.

Polarising is simply putting current of the correct polarity through the field winding to establish the desired residual magnetism. To do this disconnect the field connection (the smaller connector) and connect a length of wire temporarily between this terminal and the battery circuit, either the "A" on the control box or Al on the fuse holder. Circuit 33, colour BROWN. There may be some small sparks and this is to be expected, as about 2 amps will be flowing. This can be checked if you have an ammeter, but is not important. Take the usual precautions when making this connection on for about 10 secs and repeat a few times "for luck". Leaving it on for longer will do no harm except eventually run your battery down.

All that is left is to remake the connections, start the engine and check that the "ignition" lamp goes out. If the dynamo is the correct type and is replacing a correct one the control box should not need checking. If it does this is covered in the workshop manual.

DISCLAIMER:

Whilst every effort is made to check the information incorporated in this serie3, no responsibility can be accepted for errors. However, corrections, improvements, suggestions & additional information will be very welcome (in writing please).

COPYRIGHT:

NOTE
Positive earth Electronic SU pumps are polarity sensetive and can to be changed to Negative Earth by someone that knows what they are doing eg -SU MIDEL

Don Hardie 25/05/2010

JOHN HARPER'S ARTICLES
No 2

Dash Colours

It is very difficult when discussing finishes to be at all precise. There is little hard evidence available and one is up against " folklore " where lots of owner's have the same belief that their information is correct, as well it might be, but cannot identify the source or basis of their information. With colours the only way of being fairly certain is to research as many original cars as possible. The colour of the dash on a 100 is a case in point. I was of the belief that these were black unless they were a special order on the factory. An observant owner has changed my view. On blue cars it would appear that the colour should be a very dark "purplish" blue. Following this up further we have found two cases where on the back of these original dashes is chalked in large longhand the word BLUE. It therefore seems likely that dashes were specially selected during production, possibly at Longbridge, for blue cars. We have carefully looked at a variety of original dashes from both red and black cars and these do appear to be black. It any owner can provide any further evidence particularly for other basic body colours then would he or she let us all know please. In this way we can all benefit in making our cars as authentic as possible.

Changing the Oil Filter

This is a difficult, and messy job which is normally tackled from underneath the car. This usually leads to oil being spilt on the chassis and often a sleeve full of old dirty oil. If you are like me and prefer to fill the filter cup with new oil before fitting and thus avoid that worrying time when the engine has been started but there is no pressure, taken the chances are that the new oil will be spilt as well. Owners might like to try an alternative approach, which can be carried out entirely from above. Remove the two nuts from the long forward and aft bolts that hold the filter top assembly to the adapter and slide the whole complete filter back and out of the car. The filter can then be taken to the bench, keeping it in an upright position, where it can be undone, emptied, cleaned, a new element fitted and new oil added. The whole assembly can then be taken back to the car- in the upright position and fitted easily and cleanly from above. There is one small disadvantage in that it is advisable to change the round gasket. These however are only a few pence and as long as one is obtained beforehand this is not a problem.

Dynamo Polarising

stating this on new or factory replacement units, but
there never seems to be any explanation on how it is done. First a brie
explanation. The dynamos fitted to our cars are capable of producing a charg
whether the car is positive earth or negative earth, what decides whether t
produces a positive or negative voltage is called residual magnetism. Dyna

normally have permanent magnets and rely on a small amount of magnetism left in the field and yoke to get the dynamo "started". When voltage is produced this is fed back to the field windings and full output current is then available. So in simple terms the polarity depends on the small amount of magnetism left from the last time the dynamo was used. In normal use this is not a problem but if the dynamo is changed we have to deal with it. There are two approaches, test or change. In practice if the test shows the polarity to be wrong then a change will be necessary so it is best to concentrate on this, but before doing so it is worth summarising what might happen if the dynamo is the wrong polarity and nothing is done about it. What is going to happen is that the battery is at 12 volts and the dynamo will produce voltage in the opposite direction, which will add to the 12. The first indication will be that the "ignition" not charging warning lamp will glow brighter until it gets 22 volts across it. At this point the contacts in the control box will "make" with this voltage across them and an extremely heavy current will flow from the battery through the control box and the dynamo. The battery is likely to win and the dynamo will be forced to the correct polarity but at the risk of damage to components and wiring. The charging warning bulb is also likely to have been burnt out as well. The message is don't risk it.

Polarising is simply putting current of the correct polarity through the field winding to establish the desired residual magnetism. To do this disconnect the field connection (the smaller connector) and connect a length of wire temporarily between this terminal and the battery circuit, either the "A" on the control box or Al on the fuse holder. Circuit 33, colour BROWN. There may be some small sparks and this is to be expected, as about 2 amps will be flowing. This can be checked if you have an ammeter, but is not important. Take the usual precautions when making this connection on for about 10 secs and repeat a few times "for luck". Leaving it on for longer will do no harm except eventually run your battery down.

All that is left is to remake the connections, start the engine and check that the "ignition" lamp goes out. If the dynamo is the correct type and is replacing a correct one the control box should not need checking. If it does this is covered in the workshop manual.

Changing to Negative Earth

A few owners have enquired about changing their cars over to negative earth in order to fit modern electrical devices, such as radio cassette players. My first suggestion is not actually to do this at all but to go for one of the polarity conversion devices that are on the market and leave the car in its original authentic state. If this suggestion is not what is required the details of what needs to be done are listed below. The actual changes necessary are:

Reverse the battery connections
Reverse the connections to the ammeter if fitted Change over the coil connections CB and SW
Re-polarise the dynamo (see separate article above)

JOHN HARPER'S ARTICLES
No 2

All other units including the control box will work with either polarity.

If, modern accessories with permanent magnet motors have been fitted already such as

Electric screen washers

Electric radiator cooling fans

Replacement wiper motors or heater fan motors

then these may well have to have their connections reversed.
Finally, if you do change over the original positive earth to negative earth then I recommend that a clear warning label be displayed.

DISCLAIMER:

Whilst every effort is made to check the information incorporated in this serie3, no responsibility can be accepted for errors. However, corrections, improvements, suggestions & additional information will be very welcome (in writing please).

COPYRIGHT:

CIGARETTE LIGHTER SOCKETS

A single socket is mounted on the kick panel in front of the driver's door and connected to a live 12 volt source. This is used to connect a top up and maintain trickle battery charger.

A double socket is mounted on the steering column support channel and connected to an ignition-on 12 volt source. This is used to connect the GPS Speed Alert and GPS unit.

Single socket on kick panel.

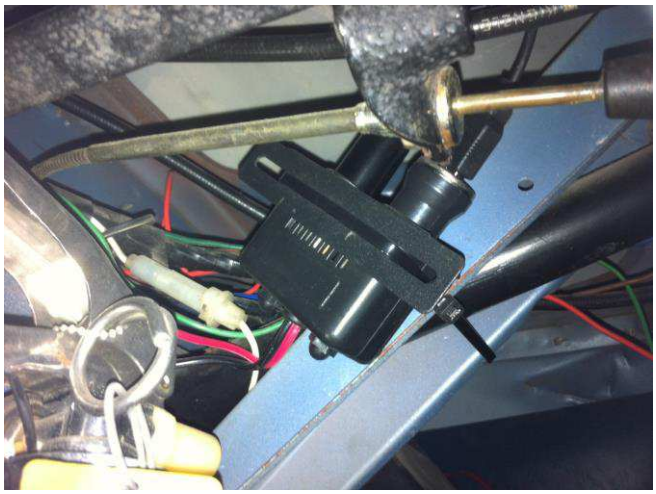

Double socket on steering column support channel.

Don Hardie 08/04/2015

Clean It Up If You Want It To Conduct.

By Don Lenschow NTAHC

When is the last time you cleaned any of the electrical connectors on your Healey? Well, that's too long. To keep the resistance down from poor contact you should clean the connectors and even the fuse block. Corrosion can lead to resistance at a connector and cause fuse failure. The fuse block shown was lightly glass bead blasted. Other connections can be cleaned with Scotch Brite to provide a good connection. This can make a good winter project.

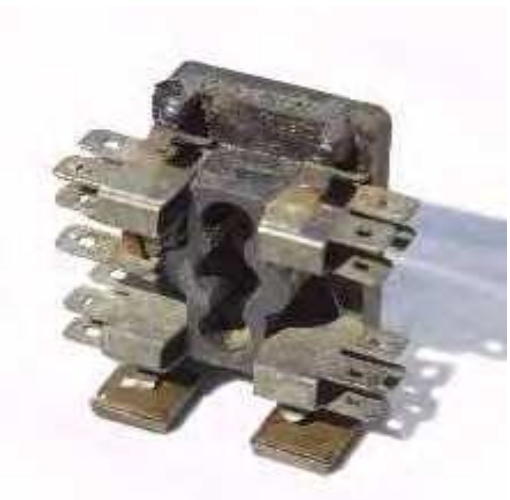

REAL HEALEY NATTER

APRIL 1996

CLUB LIBRARY

Do members realise what we have in the Club Library created by Alan McKeage? Not only books on Healey History, but **Workshop Manuals**, Video Tapes and assorted Motor Sport Books etc.

The jewel of the collection must be the bound copies of the Club Magazine 'Flat Chat'. Browse through these and you will see what the club was like in the past. The camaraderie hasn't changed even though the names of some of the guilty might have.

Some interesting snippets from the 1987 Volume are:-

The Concourse displayed 33 cars (82 in 1995).

Bank balance for May was $6116 (compare this with $45222 for March 96)

Club Spares under the direction of Ray Roberts and Stan Goodwin had such things as Front & Rear Splined Hubs, Steering Worms and Windscreens made (Don't forget that this was in the days before the Healey Factory and other Australian Suppliers were on the scene).

Regalia was rolling along being pushed vigorously by Terry Bancroft.

Competition first under John Dowsett and then John Burch was well supported.

The social scene was ably presided over first by Chris Lyttle and then Anne Read.

Club cars were -	100 & 100s	66	(75	1994/5 Year book)
	100/6	9	(27	")
	3000 Mk I	7	(24	")
	" Mk II	7	(21	")
	" Mk III	9	(33	")
		---	---	
	Total	98	(180	")

DMH-000
(THE HARDIE'S 100-4)

P.S. I was advertised for sale in the February and March issues, (when I lived at Greys Point then registered NST-600) 8 months before I moved north of the Harbour to become DMH-000.

ROD END LONG & SHORT CLUTCH RODS

I recently got to thinking that it must be over 20 years since I fitted a new short clutch rod and the long one that was in the car when I bought it 27 years ago, could be the original one.

Some internet searching showed that McGill Motorsports in the UK had a good range of rod ends. I bought 5/16" UNF Stud Rod Ends, rubber boots, a 5/16" UNF turnbuckle linkage, a 12"- 5/16" UNF threaded rod and a 5/16" UNF tube insert.

Fitting the rubber boots took some doing, I thought I would tear them, but they had tremendous stretch and after the first one the other two were a little easier.

The short rod fitted together easily, but I had search locally to get a Left Hand 5/16" UNF nut.

The long rod presented some problems, by just using the rod end and the 12" threaded rod, the length came to 13" about 1 ½" shorter than the original one, I was a bit worried that I might not have enough length to allow for sufficient clutch adjustment. Fortunately I had bought a 1" long 5/16" UNF tube insert, so I cut the head off a 1 ½" – 5/16" set screw and screwed the threaded section into the rod end then the tube insert onto that and then the 12" threaded rod into that, I used Permanent Loctite in the joints just to be safe.

I thought that the threaded rod might flex in compression, as it's root diameter is only 0.2854" against the original rod's outside diameter of 0.3125" for most of it's length, so I slid on a 6" length of 5/16" ID steel tube and secured it with a washer and nut.

The clutch and idler levers were worn in the eyes, I filled them with brazing rod , being careful not to overheat the forgings, redrilled them 5/16" and fitted a new Sintered bush (suitably soaked in oil for 3 days) in the idler.

It all went together without any problems and the clutch does feel a little easier.

Don Hardie

healeynut@hotmail.com

08/03/2015

ROD END LONG & SHORT CLUTCH RODS

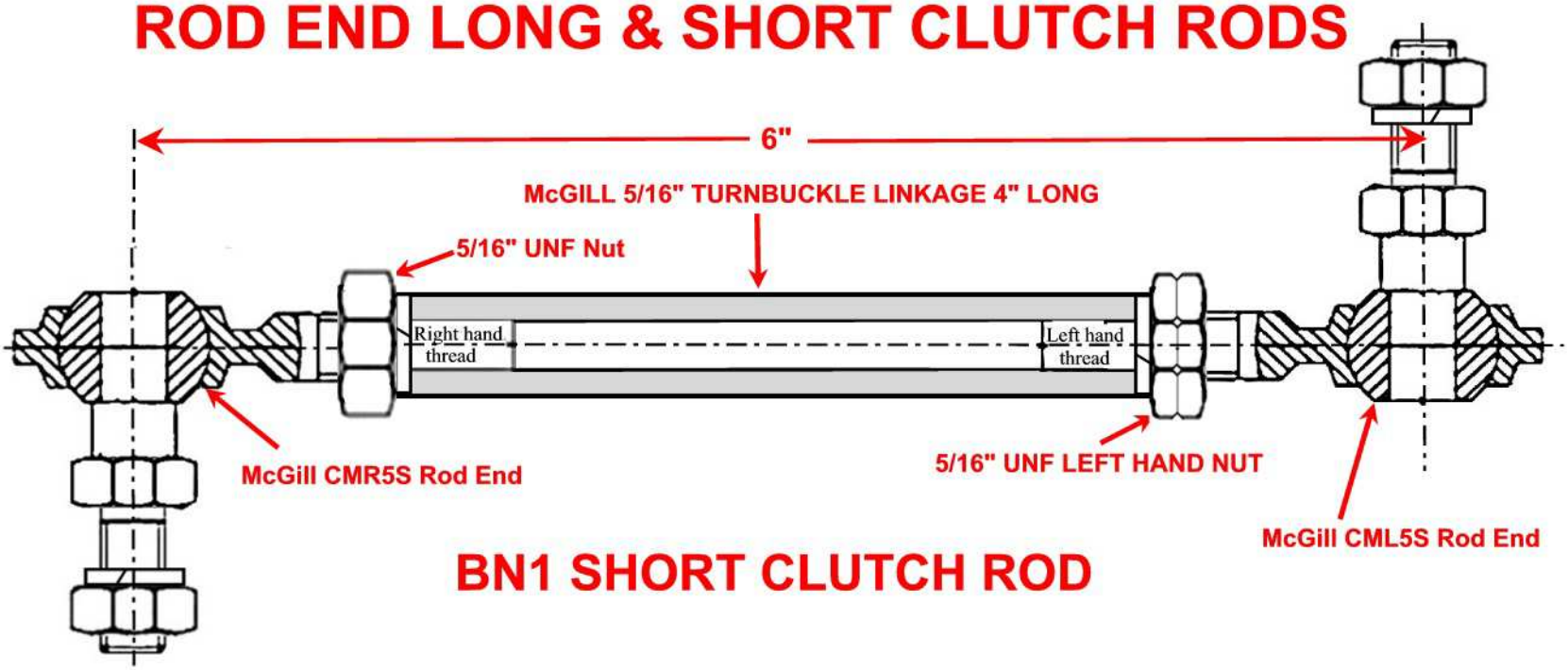

BN1 SHORT CLUTCH ROD

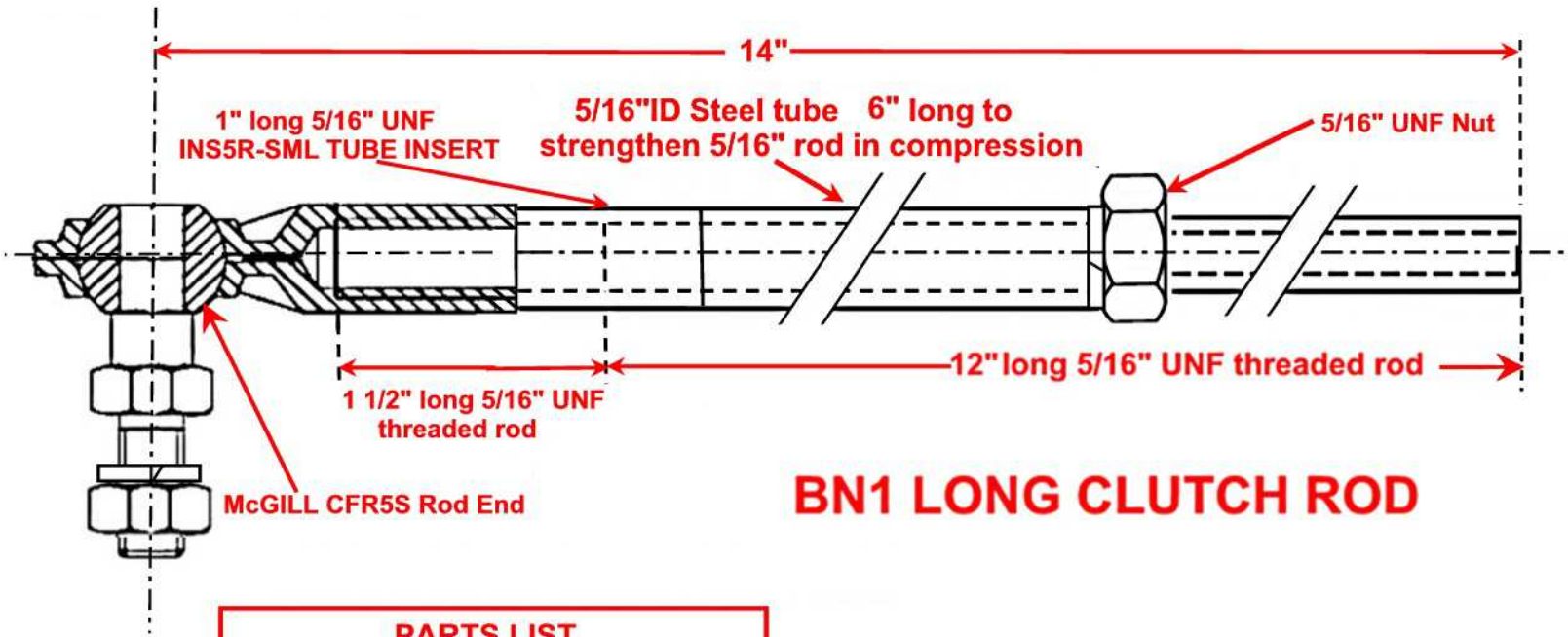

BN1 LONG CLUTCH ROD

PARTS LIST

1 off CMR5S ROD END
1 off CML5S ROD END
1 off CFR5S ROD END
1 off INS5R-SML TUBE INSERT
1 off 5/16" TURNBUCKLE LINKAGE
3 off SEAB1 5/16" RUBBER BOOTS
1 off 12" X 5/16" UNF THREADED ROD
1 off 6" X 5/16" ID STEEL TUBE
5 off 5/16" UNF NUTS
1 off 5/16" UNF LEFT HAND NUT
6 off 5/16" SPRING WASHERS
1 off 5/16" UNF x 1 1/2" SET SCREW
AND PERMANENT LOCTITE

NOT TO SCALE

ROD END LONG & SHORT CLUTCH RODS

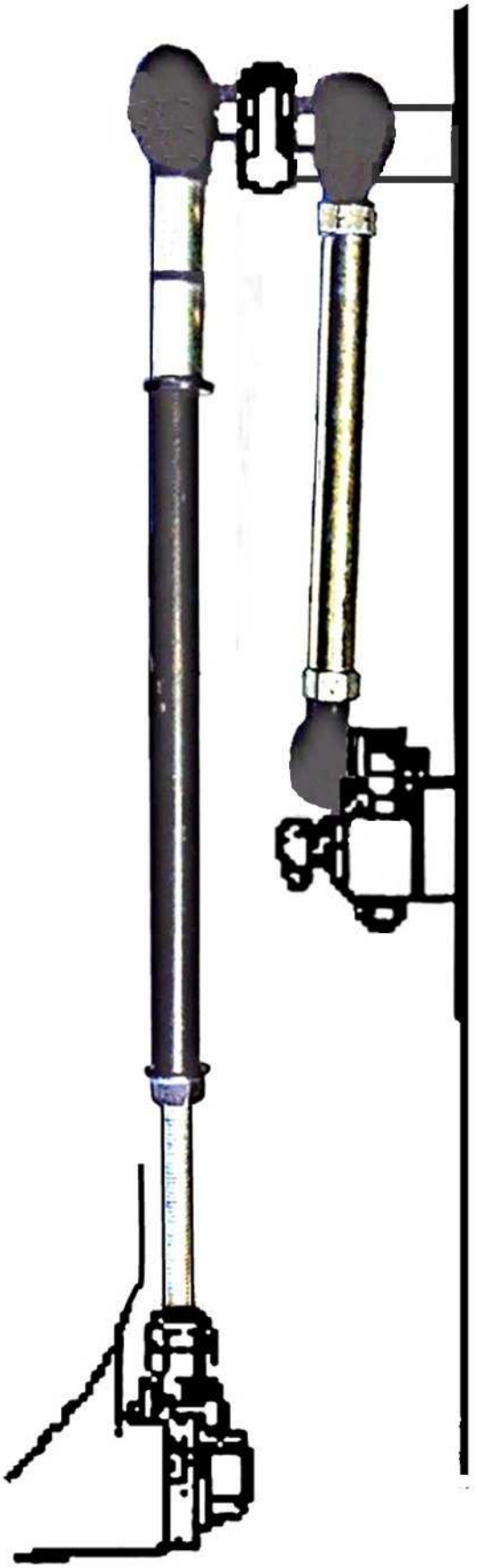

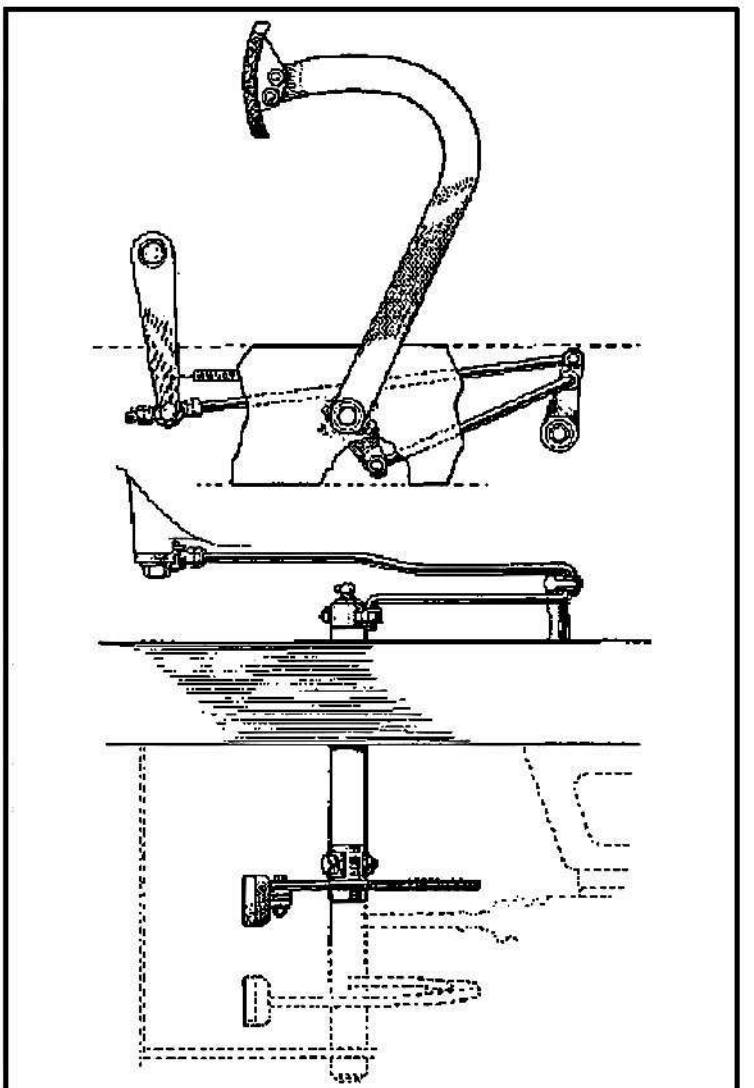

FROM WORKSHOP MANUAL

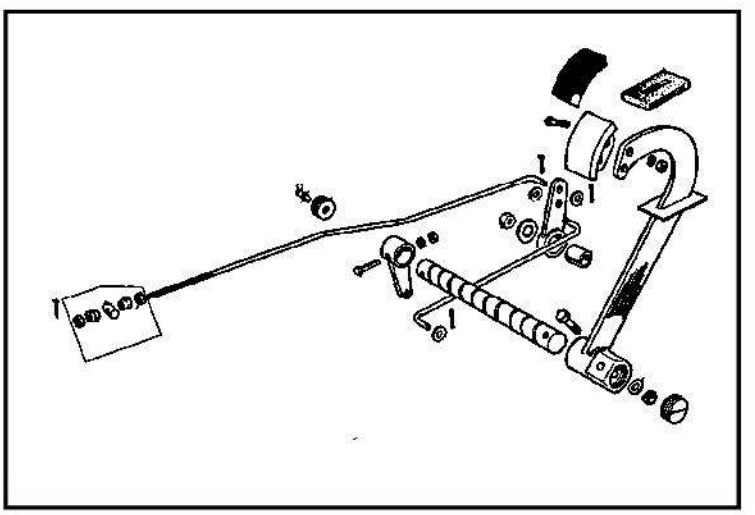

healeynut@hotmail.com

08/03/2015

NOT TO SCALE

TECHNICAL REPORT

To those new 100 owners in the club, you probably have yet to experience the broken clutch rod problem, it is quite common with the 100 as the clutch rod often breaks at the right angle bend (near the split pin) it may be first noticed by the clutch seeming to be out of adjustment and difficult to get into first gear. This soon changes to **NO CLUTCH** at all due to the broken link.

This can of course be rectified by welding up the link (it will break again) or making up a new link (it will last 30-40,000 miles). Or best still substituting a chain link for the broken rod link, a length of 3/16" chain and 2-1"x 5/16" bolts and nuts with flat washers does the job. Cut the chain to length (same as rod link –6") and simply bolt into the clutch levers, as the link is a **PULLER** not a pusher it will no longer be a problem.

I will have a sample at our next club meeting.

ERNIE CLARK

N.S.W. AUSTRALIA
Austin-Healey
OWNERS CLUB
FLAT CHAT

NOVEMBER

1984

REAL HEALEY NATTER

AUGUST 1997

CLUTCH ROD - SHORT

Not much this month due to a garage (house that should be-Don) move, but one thing that came to light when the white board was taken down, was a drawing of a stronger short clutch rod in amongst all the usual gibberish. So it is reproduced below: -

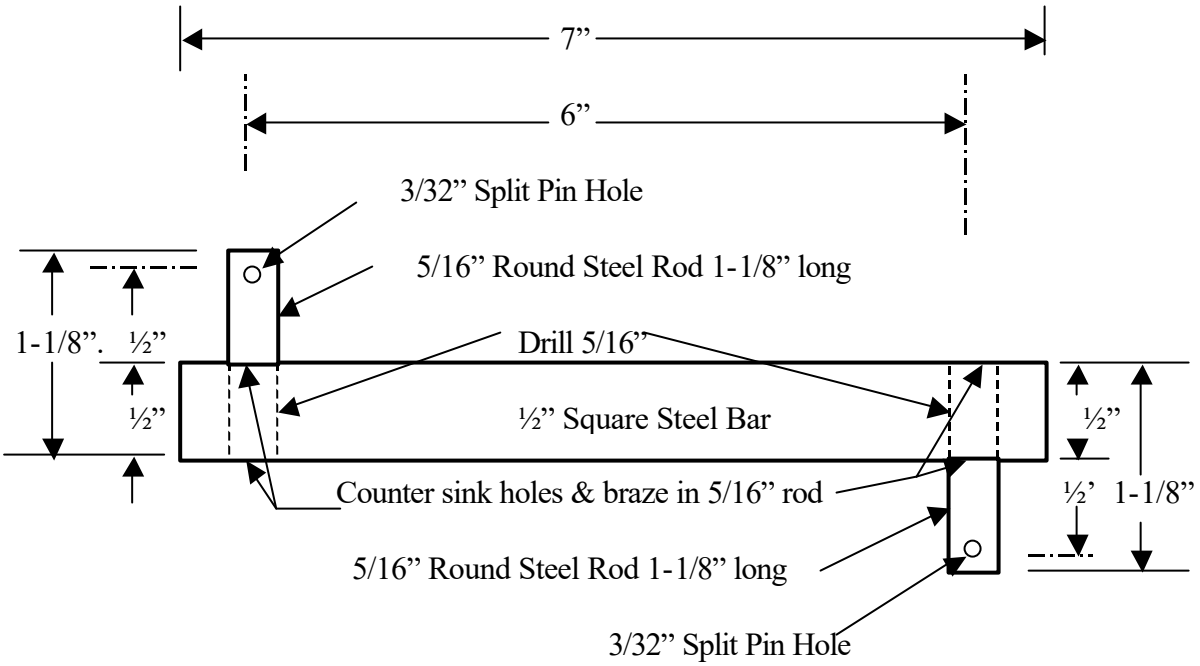

DMH-000

(The Hardie’s 100)

P.S. For all those (?) who read the P.S. there isn't one this month.

TECH TIPS
By Gary Meyer

If you have an unrestored roadster, the aluminum cockpit surround has gotten scratched and bruised over the years. I bet you would like it to be bright and shiny again. I asked my local chrome shop what they would charge to remove the scratches and polish the surface of the surround. $10 per foot says he! I started measuring and came up with $120-130 for the job. That seemed like a lot of money to me. I figured if my chrome shop guy could do the job, so could I. It's really not that hard. You'll need some equipment, however. The first picture shows what you'll need; a **beach grinder** (Eastwood recommends a motor speed of 3400-3600 RPM) with the guards removed**, buffing pads**, one **closely woven** and one **loosely woven**, a **die grinder** or **drill motor**, **120 grit flapper wheel** (or a powered hand sander) and a stick of **Tripoli** compound for rough polishing and a stick of **White Rouge** compound for finish polishing. All of the required items can be obtained at Sears or Home Depot If you already have a bench grinder and sander, the rest of the items can be purchased for less than $20. You'd still save money over having a shop perform the work even if you had to buy all the equipment, including the grinder and sander. Shown in the bottom portion of the picture is a before and after shot of a piece of aluminum door trim. The trim can be brought back to a "chrome like" sheen,

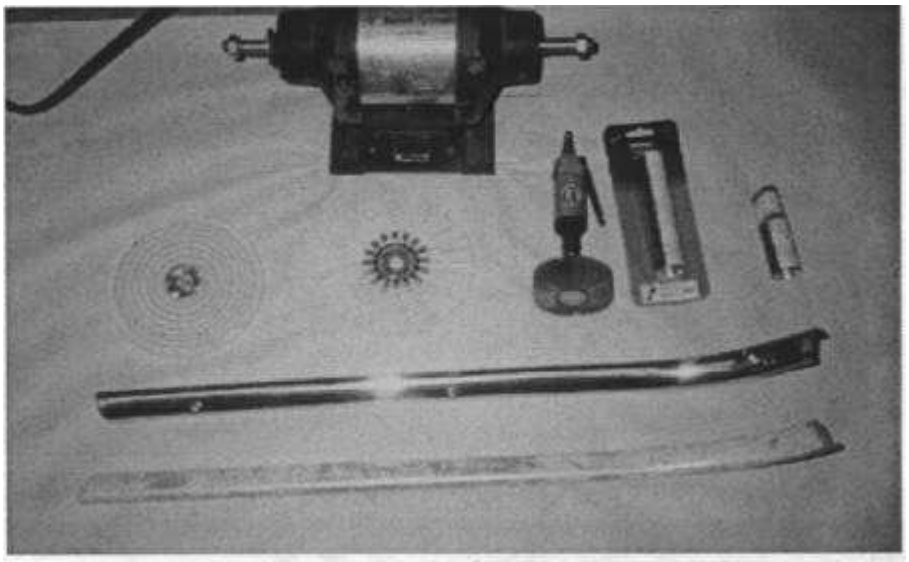

What follows is a step-by-step procedure to make aluminum shine like new. Be sure to wear eye protection during these operations. The picture shows the surface being prepared for polishing. All the coating is being removed and all surface scratches are ground smooth. The finer the grit sand paper, the less polishing that will be required.

Once the surface scratches are removed, we begin the polishing process. The buffing pad used on the left side of the converted grinder has the **closely wound buff.** This pad will be used to **rough polish** the aluminum part. I used 2 pads on the left side to give more surface area to work the piece being polished. Load the buff with **Tripoli** while the grinder is running. Just press the stick against the surface of the buff until a small amount is transferred from the stick to the pad.

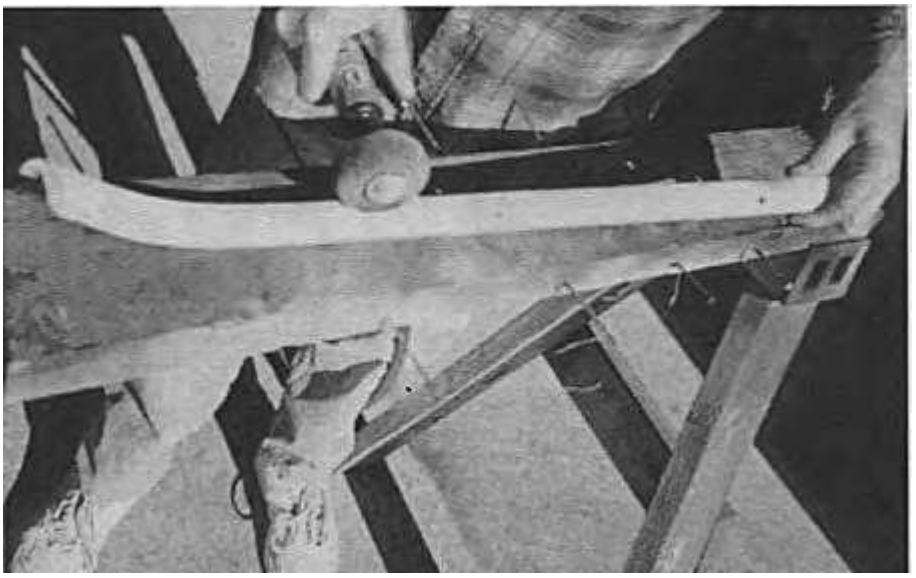

Next, hold the part to be polished against the surface of the buff.

CAUTION! A note from Eastwood, "Stay focused on what you're doing. Looking away for a moment could spell disaster for yourself and the part you're buffing. **Always run the wheel away from (not toward edges and raised areas."**

Don't try to over power the wheel. A nice smooth motion will get the job done. Pressing too hard will increase the tendency for the wheel to grab the part. Inspect your work occasionally to check progress. If the fine scratches from sanding look like they have been removed, finish polishing is next.

One the right side of the grinder is mounted the **loosely wound buff.** Using the same procedure as before, load the buff with White Rouge. This buff will remove any fine scratches remaining from the rough polish. Eastwood suggests moving the piece you're buffing with the direction of wheel rotation before final inspection. Remove any residue from the part with a soft cloth to expose the shiny surface. With a little practice you'll save yourself some money and learn a new skill.

If you have any questions about this article or other technical questions, e-mail me at gdee@worldnet.att.net

TECHNICAL REPORT
COCKPIT TEMPERATURE

With spring not that far away, now is a good time to think about reducing the cockpit temperature, particularly on the passenger side of the car, which is above the exhaust pipe.

I would like to give you some tips which I have found successful - but I am sure some of you will have other worthwhile suggestions, which I will be happy to publish.

I believe the top three steps to be taken are: -

1) Be sure no hot air can enter the cockpit from the engine compartment.
2) Be sure no hot air can enter the cockpit from the engine compartment.
3) Be sure no hot air can enter the cockpit from the engine compartment.

Main culprits in steps 1) to 3) are: -

a) Poorly fitting or missing rubber plugs in the tunnel cover.
b) Ditto with the gear lever boot
c) Poor sealing at the flanges of the firewall cover to firewall, tunnel cover to firewall cover, and tunnel cover to floor
d) Holes in firewall - missing grommets etc.

In my experience, even if you do nothing else, taking care of these points will give dramatic results. Further steps to be taken, not necessarily in order of importance, are

4) Check that the original insulation panels are in place on the firewall, to shield the heat from the exhaust system. Original insulation panels were made of asbestos, which is now banned. These panels are now typically made from fibrous cement wallboard (or "fibro") and although the insulating value of this material is practically zilch, it does provide a barrier to the transfer of heat, and by trapping a layer of air between the panel and the steel firewall, still serves a very useful purpose.

On 4 cylinder cars there was no insulating panel under the floor above the exhaust muffler as there was in 6 cylinder cars. Unless you are a concours fanatic the installation of a similar panel on 4 cylinder cars is strongly recommended.

5) An additional shield can be fitted above the muffler, by welding four 1/4" bolts to the muffler and bolting on a curved sheet of aluminium, as shown in the sketch.

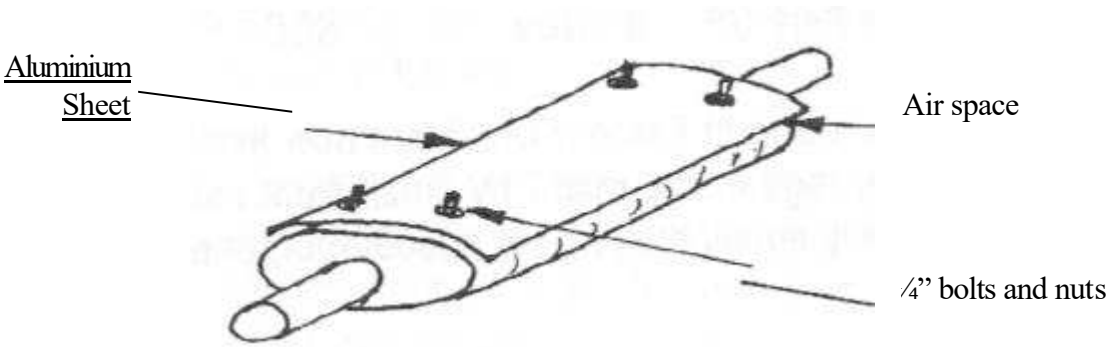

6) In my view, it is more important to stop heat reaching the floor, than to insulate the floor after it has already become hot. However, close fitting carpets can make conditions more comfortable. Graham Adams, for instance, has installed foil-backed sponge rubber sheeting beneath his carpets and this undoubtedly helps. This sheeting is available from Clark Rubber.

I hope the above suggestions help- keep your ideas coining in.

Happy Healeying! - that's cool!!

John Dowsett.

N.S.W. AUSTRALIA Austin-Healey OWNERS CLUB FLAT CHAT

July 2001

TECHNICAL REPORT
COIL CONNECTIONS

Original coils are marked CB (Contact Breaker) and SW (Switch). Later or other coils are marked + (positive) or - (negative).

CB = + positive and SW = - negative

Look at your battery and if the earth lead to the master switch is, as original from the + positive then the white with black trace must go to CB/positive side of the coil with the other white with black trace wire that comes from the loom.

If the earth lead comes from the NEGATIVE side of the battery, it has been converted, then the white with black trace from the distributor must go to the SW or negative side of the coil with the other white with black trace wire that comes from the loom.

Naturally the solid white wire or wires, depending upon the harness fitted, will go to the remaining connector on the coil. You will now have the electrons going in the correct direction across the spark gap, encouraging a better spark

Have fun,
Barry Campbell.

N.S.W. AUSTRALIA Austin-Healey OWNERS CLUB FLAT CHAT

March 1995

100 TECHNICAL

COLD AIR BOX

I made a Cold Air Box out of a 400mm piece of 100mm x 50mm aluminium rectangular section.

Follow the instructions below and you can too.

Solder in a piece of the same thickness aluminium to blank off one end. The aluminium solder of the type you buy at Swap Meets does a good job using the heat of a Porta-gas Torch.

Mark out, on the horizontal centreline of one side, the centres of the carburettors equidistant from the vertical centreline. Then mark the holes for drilling using a gasket made for the outside face of the carby. The large holes are easily cut using a metal cutting hole saw.

The captive nuts are AVDEL THIN SHEET NUTSERTS, 8 x 1.25 Metric, you might have to search around nut and bolt suppliers to get them. These are installed like Pop Rivets and can be set in place with a bolt and nut instead of their special tool. Below is a copy of the Nutsert details out of the Blackwoods Catalogue.

A hole is also required for the Rocker Cover Breather Tube. You can make this the same size as the rubber tube and just push it in.

You will probably have to bend the shroud support out of the way and resecure it with a longer right angle bracket.

450mm of 4” flexible air (Kopex) tube, secured with a large worm drive hose clip, goes forward to the radiator supports.

An air cleaner can then be secured to the outside of the radiator brackets. A trip to your local Wreckers (sorry Auto Parts Recyclers) could bring forward a suitable one.

I used a FINER FILTER AIR-80, which is reusable, just remove the outer foam plastic cover wash it out, re-oil it and put it back in place. It is a bit expensive at $93 (1996 price), but if you have to replace a paper one 8 times at say $12 then there is your FINER FILTER price.

I also fitted a splash deflector from the inner guard to the shroud, to stop the air cleaner being sprayed with water during rainy times

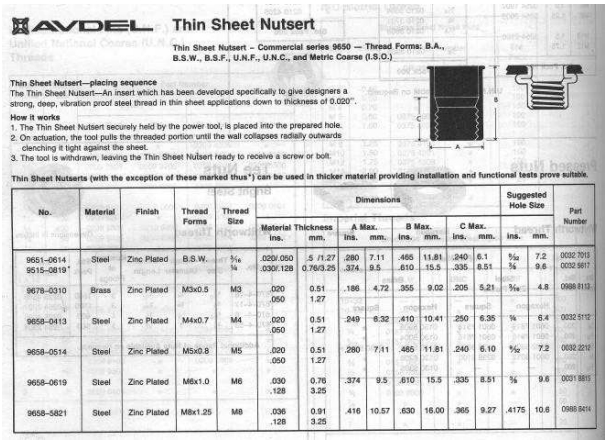

AVDEL **Thin Sheet Nutsert**

Thin Sheet Nutsert – Commercial series 9650 — Thread Forms: B.A., B.S.W., B.S.F., U.N.F., U.N.C., and Metric Coarse (I.S.O.)

Thin Sheet Nutsert—placing sequence
The Thin Sheet Nutsert—An insert which has been developed specifically to give designers a strong, deep, vibration proof steel thread in thin sheet applications down to thickness of 0.020".

How it works
1. The Thin Sheet Nutsert securely held by the power tool, is placed into the prepared hole.
2. On actuation, the tool pulls the threaded portion until the wall collapses radially outwards clenching it tight against the sheet.
3. The tool is withdrawn, leaving the Thin Sheet Nutsert ready to receive a screw or bolt.

Thin Sheet Nutserts (with the exception of these marked thus*) can be used in thicker material providing installation and functional tests prove suitable.

No.	Material	Finish	Thread Forms	Thread Size	Dimensions								Suggested Hole Size		Part Number
					Material Thickness		A Max.		B Max.		C Max.				
					ins.	mm.	ins.	mm.	ins.	mm.	ins.	mm.	ins.	mm.	
9651–0614 9515–0819*	Steel	Zinc Plated	B.S.W.	5/16 ¼	.020/.050 .030/.128	.5 /1.27 0.76/3.25	.280 .374	7.11 9.5	.465 .610	11.81 15.5	.240 .335	6.1 8.51	5/32 ¾	7.2 9.6	0032 7013 0032 9817
9678–0310	Brass	Zinc Plated	M3x0.5	M3	.020 .050	0.51 1.27	.186	4.72	.355	9.02	.205	5.21	5/16	4.8	0988 8113
9658–0413	Steel	Zinc Plated	M4x0.7	M4	.020 .050	0.51 1.27	.249	6.32	.410	10.41	.250	6.35	¼	6.4	0032 5112
9658–0514	Steel	Zinc Plated	M5x0.8	M5	.020 .050	0.51 1.27	.280	7.11	.465	11.81	.240	6.10	5/32	7.2	0032 2212
9658–0619	Steel	Zinc Plated	M6x1.0	M6	.030 .128	0.76 3.25	.374	9.5	.610	15.5	.335	8.51	⅜	9.6	0031 8813
9658–5821	Steel	Zinc Plated	M8x1.25	M8	.036 .128	0.91 3.25	.416	10.57	.630	16.00	.365	9.27	.4175	10.6	0988 8414

.

Spiro Hallias found that a filter box from a Volvo 264 6 Cyl. with twin carbys took little modification to fit. It has a replaceable paper air filter and the air tube to the front goes behind the shroud support.

Don Hardie. 21/09/2002

UPDATE 1

Barry Campbell is concerned about the 50mm width of the Air Box, he is of the opinion that it should be 100mm to get the correct airflow, but this would be nearly impossible to fit with the shroud support in the way

Don Hardie. 2/02/2003

UPDATE 2

The FINER FILTER AIR-80 I used is no longer available so you will have to search to find one that will do.

I have seen modern paper filters mounted in the same place, but I would be wary of them getting wet and disintegrating.

Don Hardie 15/10/2008

UPDATE 3

UniFilter (http://www.uniflow.com.au/), who took over FinerFilter, has two 90mm filters that are worth following up.

Compact RAMPOD

Compact profile Rampods providing improved air flow characteristics for custom applications

All kits supplied with joining hose & clamps (no brackets) and available in either red, green, yellow or blue pre-oiled foam.

Available in 63mm, 70mm, 76mm, 80mm & 90mm intake sizes.

Optional Outer Cover available for operation in other than sealed road conditions.

Universal RAMPOD Kits

A series of universal Rampod kits for general and custom user applications.

5 intake sizes available - 57mm, 63mm, 70mm, 80mm & 90mm.

Don Hardie

5/11/2008

COLD AIR FAN

As the 100s don't have a fan in the cold air system, I thought it would be a good idea to fit one.

The one I fitted into the 4" cold air tube was a 3" one as at that time I couldn't get a 4" one. With a lot of cloth tape and a couple of large hose clamps in it went as in the photo below.

4" ones are now available at most Marine Supply Stores.

To operate it I fitted a micro switch (see Page 2) which works when the air operating cable is fully out.

Don Hardie

Bilge Blower

Vent closed.

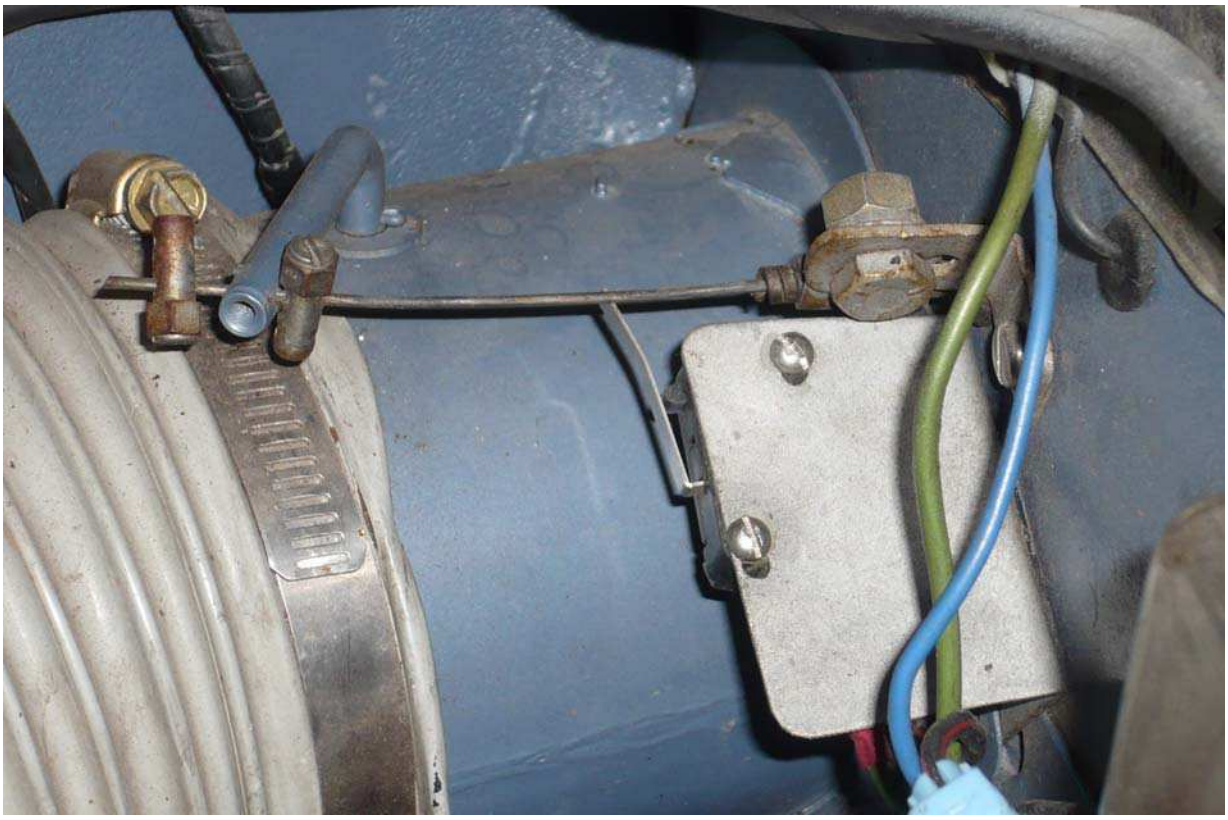

Vent fully open - fan switched on.

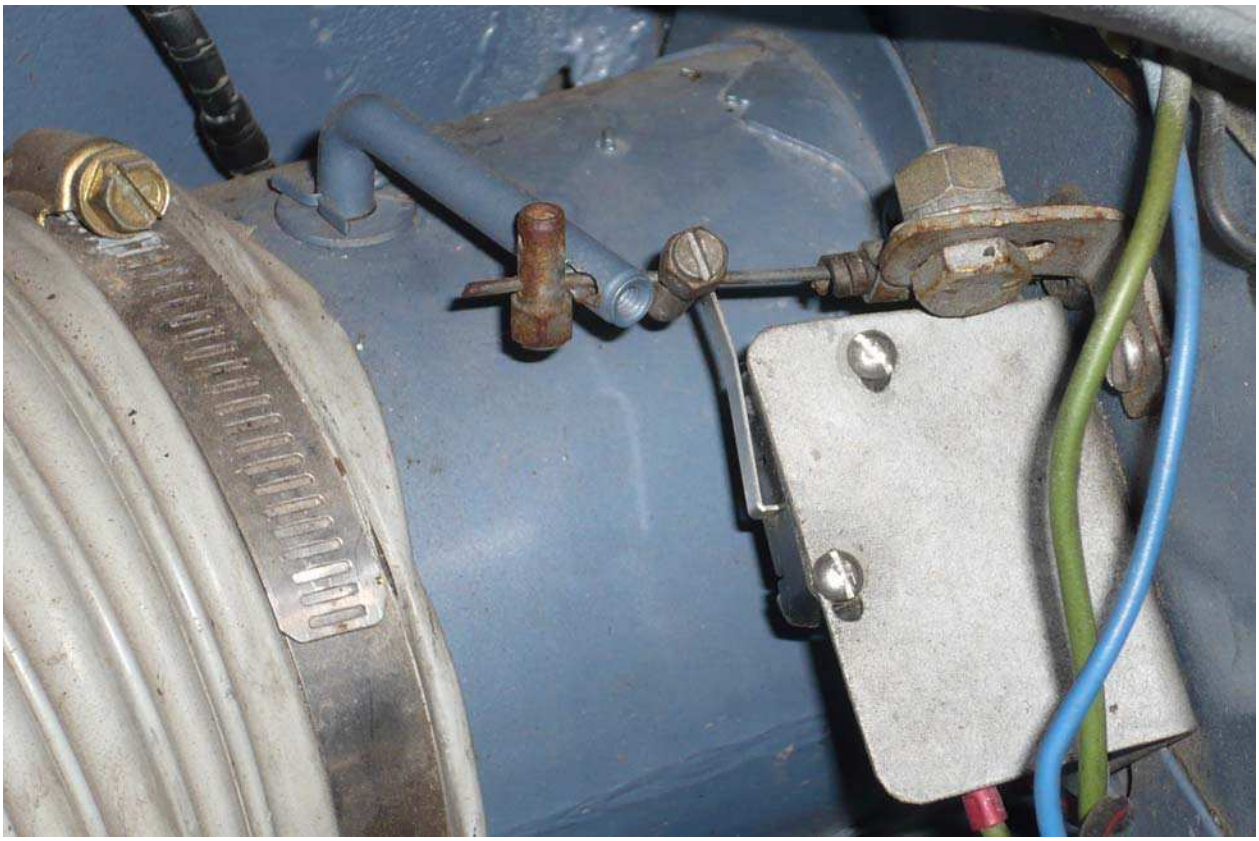

[Healeys] electrc fan experience

from [*rjhco*] [Permanent Link][Original]

To: "'austin healey'" <healeys@autox.team.net>
Subject: [Healeys] electrc fan experience
From: "rjhco" <rjh.co@tx.rr.com>
Date: Thu, 5 Feb 2009 16:21:27 -0600

I had an electric fan (similar to the one referenced from classic Car World but from Vintage Air) mounted in front of the radiator as a pusher. It worked very well for city driving but at high speeds the pancake motor blocked too much air to cool the hard working engine coolant. A puller fan is much, much better.

I did not have room behind the radiator, between the water pump pulley and cooling fins, to mount the fan with pancake motor. To solve the issue, I installed a 'sidewinder' electric fan behind the radiator. The sidewinder style has the electric motor mounted off to the side with an enclosed cog belt running the fan. I clocked the fan so that the motor sits on the lower left side of the engine. The location required a short extension of the lower water hose to place the hose behind the fan motor.

The unit that I am using employs a 16" fan with a built in cast aluminum shroud. On a hot day, When the fan engages, the fan motor runs less than a minute to cool down the temperature enough to shut down. It produces a hurricane. The motor draws 19 amps. The engine stays cool at high speeds without the fan running.

Best regards,
Jim Hockert
Dallas, TX
BJ8 Open roads car

[More with this subject...]

<Prev in Thread] **Current Thread** **[Next in Thread>**

- **[Healeys] electrc fan experience**, *rjhco* <=

Previous by Date: **Re: [Healeys] motor rebuild**, *David Nock*
Next by Date: **Re: [Healeys] Side mirrors**, *gardner5*
Previous by Thread: **[Healeys] Side mirrors**, *Peter Linn*
Next by Thread: **Re: [Healeys] Austin Healey at the races, rallies photos**, *Patton Dickson*
Indexes: [Date] [Thread] [Top] [All Lists]

The FANMAN™ The Finest In Automotive Electric Fans

Categories

- Spal Electric Fans (50)
- **Side Winder** (1)
- High Performance Stainless & Alu (17)
- Fan Accessories (3)
- Nose Cone Kits (1)
- Fan Spacers (26)
- Heavy Duty Flex Fans (16)
- Thermal Fan Switch (7)
- Trans Coolers (10)
- Overflow Bottles (3)
- Gano Filters (1)

Newest Products

Go to..

Side Winder

What's New?

Size 16" pull / Part# 2049

~~$165.00~~

$117.00

Quick Find

Use keywords to find the product you are looking for.

Advanced Search

Information

Shipping & Returns

Privacy Notice

Contact Us

Side Winder Electric Fan Kit $420.00

The Sidewinder has taken on a whole new look. Over 2200 CFM and only 1 5/8" thick in the center. Please call us toll free at 866-435-6477 to inquire about the SIDEWINDER.

Click to enlarge

Side Winder

Low Profile Electric Fan Kit

Our Newest Product, The Sidewinder Fan Kit is designed to fit where other fans can't. It's low profile design and high CFM output is sure to keep your vehicle running cool.

- Over 2200 CFM
- Only 1 5/8" depth at center of fan
- Easy to install, takes up minimum space
- Pull only
- Quiet operation

Part #SW

Down Flows / Shrouds
Most down flows use one large fan 3 3/8" thick x 16" in diameter.

IMPORTANT: Allow an additional 1/8\\\\\\\\\\\\\\\\\\\\\\\\\\\\\\\" when using our mounting brackets. Shrouds cannot be used on a pusher fan. Adding a shroud puts a fan 1 1/8\\\\\\\\\\\\\\\\\\\\\\\\\\\\\\\" closer to the water pump. If the core is larger then 20\\\\\\\\\\\\\\\\\\\\\\\\\\\\\\\" x 24\\\\\\\\\\\\\\\\\\\\\\\\\\\\\\\" then two electric fans work best. Fans come in 2 1/2\\\\\\\\\\\\\\\\\\\\\\\\\\\\\\\" or 3 3/8\\\\\\\\\\\\\\\\\\\\\\\\\\\\\\\" thickness. On a 16\\\\\\\\\\\\\\\\\\\\\\\\\\\\\\\" fan, the top of the fan shroud to the bottom of the fan motor measures 11\\\\\\\\\\\\\\\\\\\\\\\\\\\\\\\". Below the fan motor you will need approximately 2\\\\\\\\\\\\\\\\\\\\\\\\\\\\\\\" between teh water pump and core for mounting the fan. Down flows with core sizes wider then 20\\\\\\\\\\\\\\\\\\\\\\\\\\\\\\\" or taller then 24\\\\\\\\\\\\\\\\\\\\\\\\\\\\\\\" work better using a custom shroud.

Current Reviews: 1

This product was added to our catalog on Tuesday 21 June, 2005.

Reviews Add to Cart

Customers who bought this product also purchased

SPAL Programmable Electric Fan Controller

ACR

FRH

Shopping Cart

0 items

Notifications

Notify me of updates to **Side Winder Electric Fan Kit**

Tell A Friend

Tell someone you know about this product.

Reviews

Ive heard good things about this fan. My friend has a 40 for ..

★★★★★

Languages

Currencies

US Dollar

100 TECHNICAL

This article was lifted from The TR Register Newsletter Dec Jan 2002.

CONDENSERS AND DISTRIBUTORS

During the course of the activities in Canberra, a couple of asked me people the importance and workings of the condenser in TR distributors. Thinking that two different people asking the same question was more than a coincidence. I now put pen to paper (metaphorically speaking) in an attempt to answer this age-old question.

To understand what improvements and changes that were made by Lucas, it is important to know what the various cam types mean. The 3 sketches below indicate fairly clearly the advancement made during the late 40's and 50's when the TR engine first saw the light of day in the Vanguard Phase I. These are SYMETRIC, ASYMETRIC and HIGH LIFT.

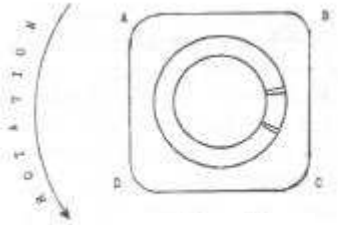

Initial 0.014" - 0.016"
Normal Service 0.010" - 0.012"
SYMMETRIC CAM
Corner of symmetric cam A-B-C-D are smooth & even on both sides of profile.

Fig. A

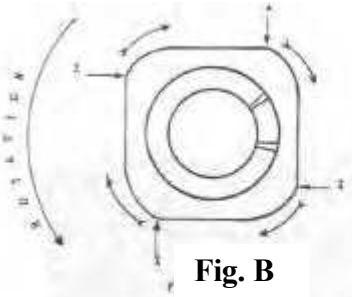

Initial 0.014" - 0.016"
Normal Service 0.010" - 0.012"
ASYMMETRIC CAM
"X's" indicate abrupt change in profile.
Arrowed section indicate smoother return to cam sides.

Fig. B

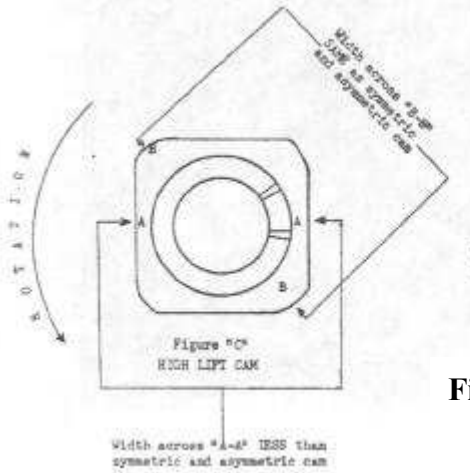

Initial 0.014" - 0.016"
Normal Service 0.014" - 0.016"

Fig. C

Prior to 1949, Lucas employed symmetric cams in their Distributors. Consequently this type of cam was not fitted to Triumph vehicles. The sketch is put in to illustrate the progress made in distributor design. Only Asymmetric and High Lift cams were used.

In 1949, the asymmetric cam was introduced for distributors on 4 cylinder engines, the symmetrical arrangement being continued on 6 cylinder engines (I assume that the reason for this was tooling problems with 6 lobe cams). Asymmetric cams reduce pitting and piling on the faces of the contact points by causing the contacts to open quickly and close slowly.

From 1952, Lucas Distributors for both 4 and 6 cylinder engines were fitted with High-Lift Cams, the 4 lobed cams remained asymmetric in profile as before. The term "High-Lift " is derived from the steep angle of cam profile and the corresponding high lift of the contact breaker lever Four lobe cams thus permit the contact points to remain closed for a longer period, allowing a greater build up in time in the ignition coil primary circuit, with consequent improvement in performance at high speeds. Another advantage of the high lift cam is that increased accuracy of the ignition timing may be obtained the point of maximum separation of the contact points occurring over a smaller angular movement of the distributor shaft.

Great care is necessary, however, when setting the contact breaker gap to ensure that the fiber heel is at the highest point of the cam lobe. The point gap for high lift cams is approximately
0.014" to 0.016" for normal service.

With any but new contacts, adjustment of the contact breaker gap will almost certainly result in the points failing to make good contact, therefore the points must be trued before adjustment is attempted. Tungsten points will require the use of a fine carborundum stone. Truing of the points is a far more delicate and important job than most people realise. In most cases it cannot be done effectively with the points in place in the distributor. It is well worth the extra effort to remove the contact breaker point assembly to the bench for servicing.

When truing is done by hand, frequent checks should be made on the progress of the work by placing a piece of paper between the points to test for flatness and full contact. It is not necessary to clean off all the marks, only sufficient metal should be removed to obtain a reasonably good flat surface. This means that most truing will be done on the point which has “piled”. This is the reason why more recently designed points have a hole in the center of one point (Vented Points).

Only if pitting and piling are excessive should replacement of points be necessary. How many owners buy new points every time they service the ignition system? It is waste of money. Provided that the surface of the points is clean and free from excessive pitting or piling and the correct gap can be obtained, it may be assumed that the points are serviceable.

THE CONDENSER

The condenser is a vital component in the ignition circuit. Often its importance is not fully appreciated. Its function is usually dismissed as being to prevent sparking at the contact breaker point; but the condenser also increases the voltage in the High Tension Circuit and prolongs the duration of the spark. Prolonging the duration of the spark results in the fuel air mixture in the cylinder being given a better chance to fully burn and so create more power per firing stroke with consequentially less fuel used at a given throttle opening.

When the contact breaker points open, a high voltage current is induced in the coil secondary winding. A current of several hundred volts is also induced in the primary winding in the same direction as the flow of the current from the battery.

This induced current would continue to flow momentarily across the gap between the contact breaker points. The resulting arc would rapidly erode the surface of the points and would delay the collapse of the lines of force. The condenser is therefore connected in parallel across the points to absorb the induced current. As soon as the flow of the induced current ceases, the condenser discharges through the primary winding of the coil, further assisting demagnetizing the core. The charging and discharging is followed by an alternating series of diminishing surges of current between the condenser and the primary winding of the coil. This is the reason for the prolonging of the spark mentioned above.

By a suitable combination of condenser capacities, resistance and inductance values of the ignition circuit, it is possible to control the arcing, although the amount of metallic bridging between the points is not controllable. I know of one enthusiast who used to change the polarity of his ignition system every six months in an attempt to stop this effect! To entirely eliminate the slight arcing across the points would probably result in a huge amount of pit and pile formation on the contacts.

Characteristics of both condenser and associated circuit are therefore carefully chosen to permit a small amount of arcing in order that the metal which has been transferred from one point to another (as the result of momentarily raising the metal above the melting point whenever the points separate) may be transferred back to the point from which it came.

Some degree of transfer of metal and oxidation of the points must be expected in service. This should not be attributed to faulty condenser action until the condenser has been proved to be faulty. This may sound a bit "Irish", but condensers rarely fail and most troubles can be reduced by maintaining points in clean condition and by correctly set gaps

By observing the direction in which metal is transferred from one point to the other, it is possible to select a condenser with a suitable capacitance to correct the condition. A simple rule for determining condenser capacitance is - If the MINUS (or negative) point is MINUS material, the condenser is MINUS or under capacity. The negative point will be that carried by the breaker arm, assuming that the positive pole of the battery is earthed as is usually the case with TR's of the 50's. However, most TR owners have reversed the polarity from the original, so the positive point will be that carried by the breaker arm in modern TR's.

CYCLE OF OPERATION OF THE IGNITION CIRCUIT

A summary of the workings of the ignition circuit may not be out of place here to consolidate our thoughts on the discussion above. I have not bothered with the mechanical workings of distributors, as this aspect improbably pretty familiar to everyone.

When the ignition switch is turned on and the distributor points are closed, battery current flows through the primary winding of the coil and through the contact points to ground. This flow of current through the primary winding of the coil produces a magnetic field around the coil winding and thereby stores electrical energy in the coil.

As the revolving distributor cam separates the contact points, the primary circuit is broken. The condenser absorbs the current, which tends to surge across the gap as the points open, thereby producing a sharp break in the current flow. If the flow of the current was not sharply broken it would form an arc, which would burn the points badly and would also drain away most of the energy stored in the coil. There would be insufficient energy left in the coil to produce the necessary high voltage surge in the secondary winding (or circuit).

The very rapid change in the strength of the magnetic field when the primary circuit is sharply broken causes a high voltage to be induced in every turn of both the primary and secondary windings. The coil acts as a sort of transformer. Now, the transformers that we are all familiar with can, say transform 240 volts AC to 110 volts AC. Transformers only work with a make-and- break of the electrical impulse induced, (Michael Farraday was the lad who found this out). You cannot transform direct current, only alternating current. It is the making and collapsing of the magnetic field induced by the contact breaker points opening and closing which makes all this possible.

In the primary winding the voltage may reach a value as great as 300 volts, resulting in further charging of the condenser. In the secondary winding the voltage may reach a value of 25, 000 volts, although the value is usually between 10,000 and 18,000 volts depending upon operating conditions. The high voltage surge produced in the secondary winding of the coil travels through the cable to the center of the distributor cap, through the rotor to the appropriate distributor segment from which it is conducted to the correct spark plug via the high-tension lead. The high voltage surge jumps the gap between the center insulator electrode and the grounded side electrode of the spark plug, thus producing the spark required to ignite the charge in the selected combustion chamber of the engine.

As the spark appears at the spark plug gap, the energy in coil begins dissipate through the secondary circuit, thus sustaining the spark for a small fraction of a second. During this interval the condenser discharges back through the primary circuit, producing an oscillation of the current flow in the primary circuit during the brief instant that is required for the primary circuit to return to a state of equilibrium. It is important to realise that the condenser does not discharge until after the spark has occurred at the spark plug gap.

This sequence of action as described above is repeated as each of the distributor lobes moves past the heel of the contact breaker arm to cause the contact points to open and close.

No wonder that the ignition system gets a bit "iffy" from time to time!

“THE BUSH MECHANIC”

JOHN HARPER'S ARTICLES
No 7B
FEBRUARY 1991

CONVERTING THE AUSTIN HEALEY 100 FROM LEFT HAND TO RIGHT HAND DRIVE

Introduction

The aim of this document is to help the average 100 private owner. I am keen to see that these owners use the information freely and that they will provide feedback from which we will all benefit.

I believe that some owners have been given the idea from people selling LHD cars that this conversion is fairly easy. In a way it is, as no actual changes have to be made other than fitting the appropriate parts. On the other hand the full list of changes is quite long and the costs will add up to a tidy sum.

Shopping List

Type must be selected to match the age of the car)

1 * Steering Box assembly
1 * Idler assembly
1 Dash panel
1 Accelerator pedal
1 Accelerator cross (relay) shaft
1 Accelerator left hand lever arm
1 Accelerator right hand lever arm
2 Accelerator cross shaft bearings (on pedal box walls)
1 Clutch pedal
1 Brake pedal (later version recommended on all cars)
1 Clutch and brake pedal shaft
1 Gearbox bell housing cross shaft
1 Master cylinder push rod
1 Master cylinder spacer triangle
1 Master cylinder pull off spring
1 Master cylinder spacer countersunk bolt
2 Master cylinder fixing bolts
1 Master cylinder to fluid reservoir pipe
1 Master cylinder to 5 way pipe
1 Fluid reservoir fixing bracket
1 Revcounter cable
2 Headlamp light unit
2 Headlamp bulbs

2 Headlamp adapters and cables
2 * Wiper arm
2 * Gearlever
1 RH adjustable seat slide (later cars) 1 Tonneau cover
1 Rear number plate bracket
1pr Side screen if necessary
1set Carpets

Parts to Reposition

Various parts, some of which I have not covered already have to be moved to the opposite side of the car.

The full list is

Parcel Shelf Choke and Cold Air Brackets
Floor Blanking Plates
Dash Brackets
Dash Grab Handle
Overdrive Relays on a BNl
Clutch Linkage
Master Cylinder
Steering Column Fixing Bracket
Steering Column Blanking and Sealing Plates
Dip Switch
Speedometer cable (Reroute)

OTHER

Left hand drive cars may not have had the same rear number plate bracket as right hand and a new one may be required,

The heat insulation material on the outside of the L.H. foot well will need replacing where the pedal holes are no longer used.

Some versions of the hood side screens may have a signaling flap only on the driver's side.

Certain carpets may have a heel protector panel on the driver's side, which will need replacements.

Different Versions of The 100

During the life of the 100 there were many modifications, some of which effect this conversion and it is important that these are understood before carrying out the work. It is convenient to break these changes down into four stages.

JOHN HARPER'S ARTICLES
No 7B

A. The first cars had an adjustable steering column, a two piece dash panel and fixed seats.
B. After a few months of production this arrangement was changed to a one piece dash with a fixed steering column and adjustable seat runners on the driver's seat but not on the passenger. Chassis number C. 149930

C. Just after the introduction of the BN2 at chassis and engine number CE.228047 the steering box and idler were changed to a heavier type. The box which was previously Burman had been replaced by an early Cam Gears version at CE.231109
D. Although it took place after 1 00 production had ceased the steering box was changed again on the later BN6 100/6 to a much improved version with a needle roller peg assembly and raised top cover at C. 1 995.

Steering

Basically the change from left to right hand drive is to replace the steering box and the idler with an equivalent right hand drive version. For full authenticity an owner may wish to acquire the exact equivalent to that currently fitted to his car but in practice this may be difficult as second hand original units are virtually unobtainable and currently the only reproduced steering boxes that I am aware of are the later 100/6 and 3000 version and a variant of this modified to suit BN 1 s and early BN2s. This box is developed from the first and is not totally original. It looks somewhat similar but will be noticeable to those that specialise in authentic 100s . The 3000 version can be fitted to all later BN2s but again will not look totally authentic because it has the needle roller peg and raised top but is mechanically better than the original.

Idlers are "handed" in all cases. The shaft is the same for left or right hand versions but the casing is reversed. On the BNl and early BN2 version the 100 RHD body is the same as a LHD A40 Somerset or A70 Hereford.

In summary there are only really two options available both being fixed steering wheels and it is best to stick to these as appropriate to your car. A word of warning do not try and mix early and later versions between box and idler as the steering arms are a different geometry .

The fitting of the alternative parts is straightforward after the main dashboard bracket, blanking plate and sealing plates have been swapped over.

Dash Panel

The alternative right hand drive version has to be obtained. Early two piece versions are rare second hand and it is unlikely that they will be reproduced. In any case the two piece versions went with the adjustable steering column so it is likely that owners of early cars will have to settle for the one piece dash. All instruments can be fitted to a new dash whether they came originally from a single or two piece version.
Fitting is straight forward so long as the two brackets are swapped over before hand.

JOHN HARPER'S ARTICLES
No 7B

Controls

Accelerator

A new pedal assembly will be required with the long shaft to the left. This is now being reproduced. Alternatively the old shaft can be cut out from the existing pedal and a new longer one welded in. The right hand drive version requires two brackets; the one from the left hand can be used again but a second one must be acquired. A relay cross shaft together with two levers and two bearings mounted on the foot well side walls will need to be obtained and fitted. The bell crank on the left is discarded.

Clutch and Brake

New pedals will be required together with a new pedal shaft. The clutch linkage can be retained and fitted on the right hand side. The bell housing cross shaft will need to be replaced with the appropriate right hand drive version. The shaft on the BNl is not the same as the BN2. An alternative, which might be possible but has yet to be tried, is to reverse the existing shaft and to make a new lever with the "flats" at a non standard angle.

The master cylinder can be retained and moved to the right hand but a new push rod, triangular spacer, return spring and fixing bolts will be needed.

Brake Pipes

The master cylinder has to be moved as above. In addition the fluid tank must be moved from the left-hand bulkhead position down to a lower position on the right hand side. A new fixing bracket will be required and shorter brake pipes from the fluid tank to the master cylinder and from the master cylinder to the five way pipe connector will be necessary.

Instruments

As detailed above the instruments themselves do not need changing and can be fitted in the alternative position, however, a longer tachometer (rev counter) drive cable (4' 0") will be needed. The oil pressure gauge pipe will need to be shorter but it should be possible to coil up the existing one carefully behind the dash to loose the extra length.

Electrical Fittings

If the original loom is fitted then this is designed so that it can be swung over to the opposite hand for

The main instrument cluster The dip switch, which has to be moved The overdrive relays on the BNl The connections to the steering column loom.

The head lamps must be converted to right hand drive and this involves replacement light units, bulbs and adapter cable assembly.

JOHN HARPER'S ARTICLES
No 7B

The wiper arms must be replaced with the other hand and reset to park on the passenger side. In the case of a BN2 the wiper motor self park switch must be adjusted to enable the parking to take place in the correct position.

Gear Lever

The gear levers on both BNl and BN2 are slightly different on right hand drive cars. It is a matter of preference whether the correct ones are obtained or the existing ones slightly bent to give the best position.

Seat Slides

As mentioned above all but the early cars had adjustable runners on the drivers side only. The inner ones without the locking lever can be moved across but the outer locking right hand drive one will have to be obtained. These are now being reproduced and owners may wish to make both seats adjustable as they are on later Big Healeys.

Tonneau Cover

As this fits over the steering wheel a right hand version will be required.

JOHN HARPER'S ARTICLES
No 4

Feedback

Feedback does not have to be on subjects that I have already covered. I welcome it on any subject relating to *100s, as* I am sure do other owners.

A case in point is an Eastern Centre owner who wanted to know whether the bottom repair section of a 3000 rear shroud, which is available, could be used on his 100. I did not know the answer but thought it to be quite possible but was not sure about the position of the bumper iron apertures.

Anyway, the owner tried it, and his reply letter contained the following which I quote. .

" Apart from a little shaping up which is always required with reproduction panels, this part is fine for 100 shroud repairs".

Oil Pressure
Here are a few further points and tips

The filter gauze in the sump may need cleaning particularly if older non-detergent oils have been used in the past. This cleaning is included in the regular servicing recommendations at 30,000 mile intervals, but I personally don't think that this is necessary to repeat if the engine is kept clean by using good, modern oils which are changed regularly. Incidentally, there should be no problem with using multi-grade oils, in fact they are an improvement so long as the engine is clean and not badly worn.

One of the earlier problems with the four-cylinder engine was that the oil level was too high and caused excessive consumption. If you inadvertently used a dipstick from say, an Austin 16 you could run into these problems. The MAX mark should be 3.4 inches from the bottom.

Another problem on early engines was that too much oil was pumped into the rockers. This caused high oil consumption and could reduce the pressure on the lower part of the engine. The problem was overcome by fitting a modified rear camshaft bearing liner which half covered the outlet aperture to the top of the engine. This worked well but leads people to think there is something wrong when they fit a new liner. If this apparent misalignment is "corrected" the old problem will return. All 100's had this modification fitted so the problem only arises when camshaft bearings are replaced.

The oil pump may be worn. All 100's were fitted with a straight gear type pump, which is reliable but rather susceptible to wear. The problem is that the steel gears cut into the aluminium body and base. The worst wear is on the base as gravity draws the gears

TECH TIPS

FAQs About Keeping Cool - and Coolant - Under Pressure

Q: Why is there always a green puddle on my garage floor, but I can't find the leak? Why can't I keep my radiator topped off - even when I fill it up to the cap, the water level always goes down?

A: Because you are driving an antique car that does not have a modern cooling system. Following that great drive on a hot July day you pull your Healey into the garage, switch off the key and dash in the house to toss back a cool one. But while you're chilling out in front of the AC things are way different under the hood for your car's cooling system. Now that there's no air flow past the radiator the coolant temperature goes up, sometimes past boiling, and as the water temperature increases so does its volume. Since the cooling loop is a sealed system and because water cannot be compressed this greater volume creates pressure which, if not relieved, will cause the radiator to explode or a hose to split.

Q: OH, MY GOD—Am I in danger here?

Answer: No. Thankfully the radiator cap is designed so that at a preset pressure its spring-loaded foot seal will displace from a step at the bottom of the filler neck, allowing the pressure to safely escape. As temps go up first the air at the top of the tank, then eventually coolant blows past the seal and out the overflow hose. Thus the green puddle....

Q: So do I have to keep adding coolant and mopping up that puddle for the rest of my life, or is there something I can do to prevent this from happening?

A: There is a solution: You can install a Coolant Recovery Tank. This is simply a one or two quart tank connected to the radiator via the overflow hose which catches and holds the expelled coolant, preventing it from winding up on the floor, and then puts it back into your radiator as the car cools off.

Q: That sounds like magic! Is it?

A: No, just physics. As the water in the radiator cools off the fluid contracts, creating a vacuum. If you look at your radiator cap you'll see that there is a disc on the bottom with a hole in it. The vacuum pulls the disc open and draws the coolant from the recovery tank back into the radiator via the overflow hose.

Q: Why are two hoses connected to the recovery tank and what do they do?

A: Because that's the way it works. The hose coming out of the top simply vents the tank to atmosphere, allowing the entering coolant to displace the air inside. Without the vent the coolant would

Continued on Page 25, *Coolant Recovery*

SUPPORT YOUR CLUB AND SHOW YOUR HEALEY PRIDE

The Club officers voted last month to clear-out the regalia inventory with the exception of the "Lid Latches," Hats and Grill Badges. Everything else must go. Help your Club by participating in our very own BAILOUT SALE! See page 27 for remaining sale items.

CAAHC Regalia

To place an order or to enquire about pricing or size availability please email

Anil and Shanti Fatterpaker at:

ANIL591943@aol.com

COOLANT RECOVERY

have to compress the air and we are back to the explosion scenario. The hose going into the bottom creates a path for the vacuum in the radiator to draw the liquid in the tank back in. If this hose is not "under water" it will simply draw in air and you've not solved the problem. An alternate arrangement is to connect the overflow hose to a tube that goes into the top of the tank and down to the bottom, much like a standpipe. In either case the vacuum caused by the contracting coolant draws liquid back into your radiator, keeping it topped off.

Q: What's the big deal about keeping the coolant level in the radiator full?

A: Read the label! Ethylene glycol coolant is poisonous, yet attractive to pets due to its sweet flavor, slippery and bad for the environment as everything eventually finds its way into the Chesapeake. Also less air means more coolant and more cooling efficiency and less oxidation (spelled RUST).

Q: Is there anything else I should know?

A: Yes. The Healey radiator filler neck is longer from the upper cap seating surface to lower cap pressure sealing surface. Healey caps have a distance of about one inch from top seal to bottom seal. More modern caps have a distance of about 3/4" from top seal to bottom seal. If a short reach cap is put on a Healey, the pressure ring will never seat on the bottom of the radiator neck & you will in essence have a non-pressurized system. This happens frequently to unwary owners, assuming all caps of a given pressure rating are the same, & they loose the benefit of a pressurized system. Try to find a NAPA #703-1411 cap or equivalent.

- Michael Oritt

down and if anything foreign gets into the pump it will be ground around in the bottom. Bearing in mind that the inlet is only protected by a rather coarse gauze filter, then this can easily happen in a dirty engine.

Normally this wear can be taken up fairly easily as it only relates to the end clearance on the gears themselves. I have not found any official reference to what this clearance should be but by taking measurements on good pumps and taking advice from a professional engine restorer I have decided to settle on three to five thousandth of an inch. The base can be flattened to take out all grooves either professionally or by the old trick of using valve grinding paste on a piece of plate glass. The clearance is measured by placing a straight edge across the body of the pump and checked using feeler gauges. If the clearance is too great then the face of the body of the pump can be removed until the clearance is closed up sufficiently. Don't forget to clean away all the grinding paste carefully before reassembling.

Finally I have never seen a 100 with oil pressure indicated above 60 PSI unless something is wrong or has been interfered with. An excessive pressure may end up with a sheared pump drive followed by engine damage.

Cooling

Cooling at its simplest is to take heat away from the engine cylinder head and upper cylinder block area, transfer this heat to the coolant, move this coolant efficiently to the radiator metal then use dissipation from this metal into the air to get rid of the heat.

100's do not have a lot of spare capacity for cooling, particularly when they have run for long periods at high power and then suddenly come to a stop. The latent heat left in the engine is enormous and if this cannot be removed the coolant will boil and all the normal problems will follow. As a matter of interest I have found that it is always best to leave the engine running at a high idle speed with the heater full on if you can stand it, rather than switch off. The rate at which heat is dissipated from the radiator is dependent on the temperature difference between it and the outside air ' plus the rate at which this air flows through the radiator. It is therefore essential that a full size fan is used, the radiator is clean and there are no air obstructions such as large badge bars.

The coolant temperature should be as high as possible without boiling to be at its most efficient. This temperature can be raised by pressurising the system as described in Norman Nock's article. This pressure can only be maintained if the correct cap is fitted and there are no leaks. The correct caps are 7 PSI 1.25" tall with a base diameter of 1.5". There are many reputable suppliers but a couple are AC type RC3 and UNIPART GRC 101. The only way I have ensured that there are no leaks in the system at the working pressure is to use a professional pressure tester such as the one supplied by Sykes-Pickavant Ltd., which is rather expensive.

JOHN HARPER'S ARTICLES
No 4

The coolant must flow swiftly and without any unnecessary impediment. The vane on the water pump must be sharp, not corroded, and correctly fitted in relation to the body. There must be no blockages anywhere in the system. The radiator is the most obvious and this should be flushed out well. If in doubt have this done professionally. Hoses must all be sound; I have seen some apparently good ones on the outside with the insides partially collapsed. A far more obscure area is sludge in the bottom of the block. It is always wise to remove all the core plugs and clean out the block fully.

The triangular front gallery plate corrodes from the inside and is best replaced with one made from a quality material such as gun metal. Even after 35 years I have found many cylinder blocks with large amounts of casting sand still in the bottom, and in some cases the remains of what I believe were supporting wires for this sand. The last area to check is that all the water passages between the head and block are totally free of corrosion. The worst place I have found is in the area near the sparking plug in the cylinder head.

The thermostat is important and it is not much point in fitting a lower temperature one to try and solve cooling problems. I personally use the higher temperature 82'C (180'F) version on the basis that it will open fully at a temperature well below that which is required for full cooling efficiency and **keep** the engine and heater at the **best** temperature at other times. On the 100 the thermostat should be fitted with a small paper gasket under it to ensure that it does not leak at lower temperatures. These gaskets are difficult to obtain and not always effective due to corrosion. The alternative is to seal the thermostat down with Red Hermatite. Typical units are AC TP1 & UNIPART GTS104.

Always remember that a mistimed engine can cause overheating, particularly if it is badly retarded due to incorrect setting, a faulty distributor or its vacuum pipe. Having taken all these precautions I have not suffered from cooling problems although I have made many of the mistakes above in getting to this position. I don't believe that electrical cooling fans are necessary on a 100 purely for the sake of cooling. They of course do save on engine power and may give just that little bit better top performance.

DISCLAIMER: every effort is made to check the information incorporated in this series, no responsibility can be accepted for errors. However, corrections, improvements, suggestions & additional information will be very welcome (in writing please).

 To contact the author please write to him at: 7 Cedar Avenue, Ickleford, Hitchin, Herts. SG5 3XU. or Telephone 0462-51970.

JOHN HARPER'S ARTICLES
No 8
Feedback

I haven't included much feedback recently because of requests from owners for complete articles and there is only a limited amount of space in Rev Counter that can reasonably be allocated to 100s. There is one very recent phone call which relates to the excellent article in the last Rev Counter (page 9) on carburetor dampers. The query is what are the correct cap and damper assembly for the 100. The answer is unvented with a brass hexagonal top. Part number AUC 8102. Unfortunately this has not been available for many years and is replaced by GSU 320 which does the job just as well except that it has a round black plastic top and therefore doesn't look right. This information applies both to the standard H4 and Le Mans H6 types. A word of warning if you have fitted the carburetors from an A90 Atlantic, which I have noticed on a few cars, then what I have said above does not apply.

Four Stud Rear Axle Fitting

This article applies specifically to the BN1's that fit a spiral bevel, four stud rear axle. This axle was of Austin design as opposed to all the later "big Healey' ones which were designed by Morris Motors Ltd., or the same team working under a BMC flag. The four stud axle banjo case was first used on the A40 Somerset and is the same on the 100 with the exception of an additional bracket to anchor the handbrake cable outer. Incidentally, the half shafts, brake rods and the splined hub extensions with their locking nuts are unique to the 100; everything else is the same as the A70 Hereford.

The axle is secured to the road springs by special square shaped "U" bolts fitted around the road springs. These then feed through holes in the axle spring pads and are secured with nuts and lock nuts. This is all very straight forward. What is not always realised and causes problems, is that there should be an aluminium wedge shaped pad and a fiber pad fitted between the spring and the axle. Fitting this tapered pad was far less costly than modifying the A40 banjo case tooling. These pads are not fitted just to lower the rear of the car, but are there for a more important reason and this is to hold the axle at the correct angle which must be parallel to the gearbox output shaft. If these pads are omitted one may well experience vibration and noise. This vibration is a characteristic of the type of propeller shaft fitted to Austin-Healeys when the shafts to which it is attached are not parallel, but more on this in a later article. The fiber pad should be fitted between the road spring and the aluminium wedge which should have the thicker end facing the front of the car.

This isn't the end of the matter. When the pads are fitted it is essential that a road spring toebolt, the special bolt through the centre of the spring holding the leaves together, with a 3/4-inch long head is fitted. This locates the spring securely into the correct position in the banjo casing. If a toebolt with only a 3/8-inch long head, as fitted to later cars, is used with the above pads it will not give positive spring location. This could be dangerous as

axle location would rely solely on the tightness of the "U" bolts and the axle could slip along the spring when least expected. If this happened when driving at the limit it could have very serious consequences. If in doubt, check. I notice that many suppliers who advertise in Rev Counter make no distinction between early and late 100s so presumably fit the shorter toebolt. When I bought replacement road springs some years ago from one of our well known suppliers they tried to persuade me that the different toebolts made no difference, so beware!

Fan Belt Vibration Damage

It is important that the 100 fan belt runs true without any side to side or radial movement in the pulleys. The 100 Belt is heavy and have a much larger cross section than later types. It is this that increases the chance of vibration, which in turn can loosen the dynamo fixing bolts. These must have both spring washers and self-locking nuts fitted and they need to be checked regularly. A belt that does not run true should be replaced before damage occurs.

Severe vibration has been known to break the dynamo commutator end plate across the fixing hole.. It has also caused cracking of the main mounting bracket and has been known to break the top corner off the engine front plate across the adjusting link pillar hole. It is worth checking that the dynamo mounting bracket which bolts to the cylinder block top face with four studs also has lock washers and self locking nuts fitted.

There should be a vertical stiffener strip welded across the dynamo side of this bracket. Early versions fitted to A70's and A90's did not have this strip fitted or had a thinner one which did not reach to the bottom. It is possible over the years that your car may have collected one of the early versions particularly if an A90 engine has been fitted.

The strengthened bracket was standard on all production 100's and was considered important at the time with special recommendations about its fitment being published in earlier Austin Service Journals relating to A70's. It would be well worth keeping things as intended and not risk an early version.

 To contact the author please write to him at: 7 Cedar Avenue, Ickleford, Hitchin, Herts. SG5 3XU. or Telephone 0462-51970.

MOTO LITA STEERING WHEEL

The wheel is mounted upside down so that the now lower arms don’t obstruct the view of the instruments And you can see the blinker tell tale through the hole.

I got it from an ex Jaguar owner who was cleaning out his stock of bits.

HS6 SU CARBURETTORS

Two HS6 (1¾”) carbys off a Rover V8 were modified with various, bits from Midel SU, to fit.

Petrol filter at front and there is one at the rear behind the left rear wheel.

See also Engine Ventilation System

SU Carburetor Tips
By Jim Taylor

Jim Taylor is a retired design engineer with over 30 years experience rebuilding SU carburetors and fuel pumps. This page is extracted from a series of articles on the most common problems that Jim has observed in carburetors that came to him for service.

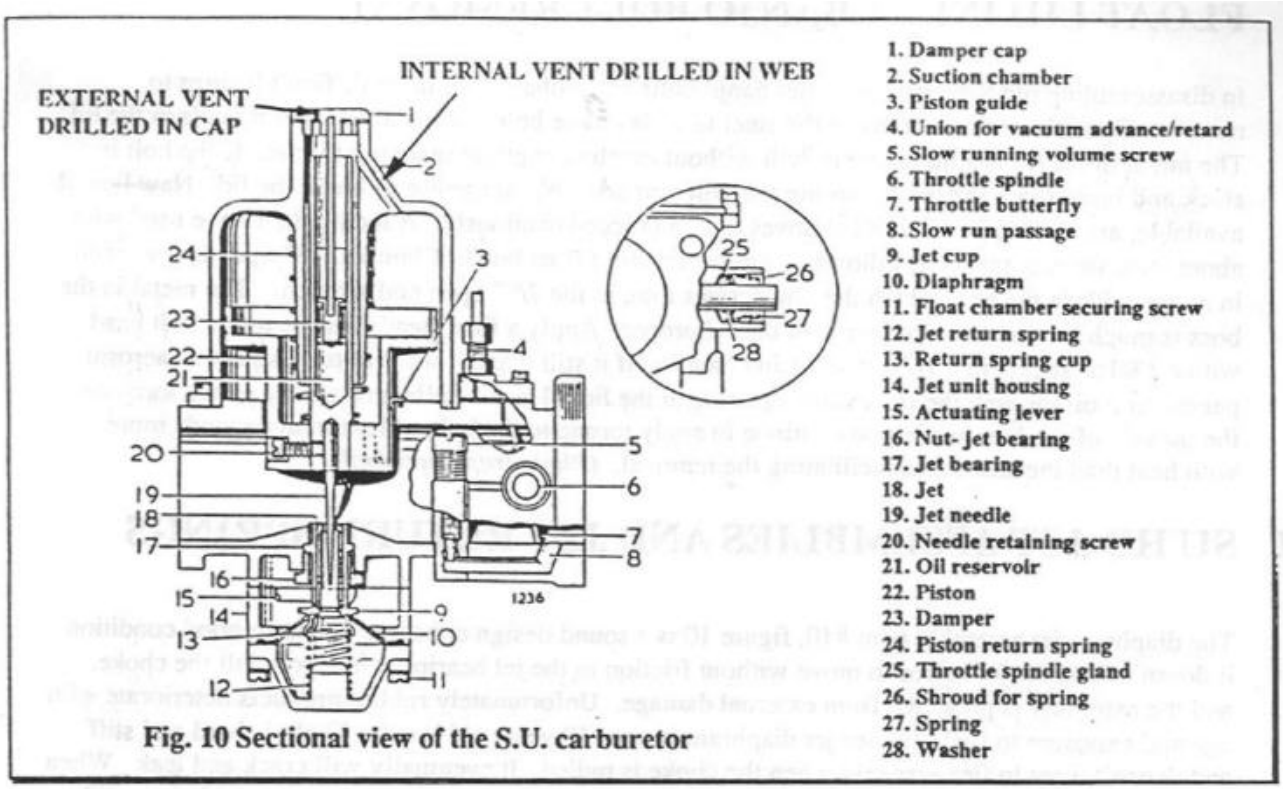

Fig. 10 Sectional view of the S.U. carburetor

I. DAMPERS

Many of the SU carbs I see have had dampers replaced with the wrong type. Referring to figure 10 it should be noted that the area above the hollow piston rod must be vented. otherwise pressure will build up on the upward movement of the piston and vacuum will occur with downward movement. This will restrict normal piston travel. Venting may be done in two ways. The cap may be drilled to allow venting to atmosphere or the web or gusset on the chamber neck may be drilled to allow internal venting back into the suction chamber. You must have one or the other but not both. If you have a solid cap and no internal drilling there is no vent and pressure/vacuum conditions will occur as aforementioned. If the cap is drilled and the web is also drilled. then there is a direct air leak into the suction chamber. If the chamber neck, such as found on 1 1/4" Sprite carbs, has no web then it cannot be drilled internally and must have a vented cap. If the chamber neck. as found on 1 1/2" and larger carbs. has a web or gusset it mayor may not be drilled. The only way to know for sure is to remove the damper and look inside the neck. If you have a plastic damper cap which is wrong, you probably should just replace it with the correct one. If you have a brass damper cap which is wrong you can drill the solid cap with a l/16." diameter drill, or plug the vented brass cap with a short piece of 14 gauge copper wire. Cut the wire just barely longer than the thickness of the cap and peen from the underside with a hammer and punch. Polishing the top surface with a fine wire rotary brush on a drill will make the plug barely visible.

II. FLOAT LID INLET BANJO BOLT REMOVAL

In disassembling old SU carbs, the inlet banjo bolts are probably the most difficult fittings to remove. Corrosion occurs between the steel threads on the bolt and the aluminum threads in the lid. The metal in the lid is a thin domed shell without much strength in resisting torque. If the bolt is stuck and brute force is used in turning the bolt you probably are going to break the lid. New lids, if available. are about $30.00 so it behooves one to proceed cautiously. A technique I have used with about 90% success rate is as follows: Remove lid from float bowl. Clamp a 7/8t' open end wrench in a vise. Place the boss which the bolt screws into, in the 7/8" open end wrench. The metal in the boss is much thicker and stronger than the lid proper. Apply a firm steady torque to the bolt head with a 13/l6" socket in a 1/2" drive ratchet handle. If it still doesn't want to turn. squirt an aerosol penetrating oil through the float valve opening in the lid. Have a colleague gently play a torch on the outside of the boss while you continue to apply torque to the bolt. Aluminum expands more with heat than the steel, thus facilitating the removal.

III. SU HD JET ASSEMBLIES AND JET RETURN SPRINGS

The diaphragm jet assembly item #10. figure 10 is a sound design concept. When in good condition it doesn't leak. the jet is free to move without friction in the jet bearing when you pull the choke, and the assembly is protected from external damage. Unfortunately rubber products deteriorate with age and exposure to fuel. If your jet diaphragm is over 10 years old it quite likely is hard and stiff and doesn't want to flex properly when the choke is pulled. It eventually will crack and leak. When replacing a jet assembly it is a good idea to have replacement jet return springs available item #12. figure 10. The springs sit down in the lowest part of the carburetor where water collects and will frequently be badly corroded.

IV. FURTHER DISASSEMBLY TIPS - SU CARBS

On HD carbs, breaking loose the jet bearing locking nut. item #16 figure 10. may be troublesome. After removing the float chamber, jet, and jet housing, access to the locking nut is attained. Squirt an aerosol penetrating oil around the nut head. Rap the head of the nut sharply with a hammer and 3/16" punch around the periphery of the head in about a dozen places. A properly sized Whitworth socket and ratchet handle will then usually easily break it loose.

Carbs that have been in storage in a coastal atmosphere for long periods may present special disassembly problems. The piston may be stuck in the suction chamber and also in the body of the carburetor. There is not much access, nor much way to apply any force. After removing the jet bearing locking nut as described above, the jet bearing, and the suction chamber screws, it is possible to insert a 3/8" O.D. steel tube from the bottom through the hole for the jet bearing and drive the piston along with its suction chamber out of the body. Once removed from the body, the piston may be driven out of its suction chamber by inserting a 5/16" brass bar inside the hollow piston rod in place of the damper. All impact in both steps is on the steel piston rod base and thus does not damage the soft aluminum parts.

V. CORK SEALS ON H-SERIES SU CARB

On the old original SU H-series carbs, cork seals are used around the jet and also the jet locking nut. The jet gland seals are small and fragile. To facilitate installation without breaking, it is desirable to soak the jet gland seals in engine oil for about 24 hours before assembly .This softens, lubricates, and slightly expands the cork. There is nothing more frustrating than to have 4 seals for 2 carbs in your rebuild kit and to break one. Before replacing cork seals it probably is a good idea to have a few extras on hand. The large cork seal around the jet bearing locking nut is a static seal and does not need lubrication. Soaking it in water for about 30 minutes is sufficient to soften and expand it slightly before installation.

VI. FLASH METAL REMOVAL - SU CARBS

In the factory machining of SU carb bodies there always seems to be some rough flash metal protrusions left, some quite prominent, where the horizontal bore of the body proper intersects the vertical bore for the piston. These protrusions create turbulence and increased resistance to flow. Flow characteristics can be enhanced if these protrusions are removed creating a smooth transition at this intersection. I use a cutting bit on a Dremel Moto-tool to grind out the protrusions. I then polish the complete bore with a fine wire brush on the Moto-tool.

VII. SU NEEDLE MARKING

SU jet needles are identified by letters and occasionally numbers stamped in the needle shank. This causes an upset in the metal at the letters and may make it difficult to push the needle shank into the hole in the bottom of the piston. Don't ever force the needle in the hole or you may never get it out again without ruining it. Take an ignition point file and judiciously smooth the ridges around the letters until the needle will slide in easily. To remove an old needle that you may want to re-use: remove the jet locking screw and pull gently on the needle with your fingers. If it doesn't budge, resist the urge to grab the needle with a pair of pliers. Squirt some choke cleaner in the locking screw hole and leave for about 30 seconds followed by an aerosol penetrating oil. Gently tap the needle inward (usual movement about 1/8"). This breaks the needle loose as well as lubricating a dry area of the shank. Pull gently again with your fingers. If it still doesn't move, clamp the needle in a vise with Masonite faced jaws and gently pull and twist the piston. If all else fails you can still resort to the pliers and sacrifice the needle.

VIII. SU CARBURETOR FLOAT VALVES

The use of Grose-Jet float valves has done more to improve the reliability of SU carbs than any other single improvement that I am aware of. The double ball design meters well and shuts off tight. The balls rotate in the flow stream so wear patterns are minimized. The balls are retained so they don't fall out on disassembly of the float lid. The only problem I have ever encountered is that the seating ball will stick shut if left sitting with stale fuel in it for 6 months to a year. But that's not the only place stale fuel causes problems. Petroleum refiners never intended for gasoline to stay in inventory over 90 days. Gasoline in your tank for long periods is not a particular problem. It's when it sits in cracks and crevices in fuel pumps and carburetors for 6 months or more that it causes problems. Gum will coat the jet needle and varnish will set up around the jet and fuel pump valves almost like an epoxy. Disassembly and cleaning with a commercial carb cleaner is about the only cure other than avoiding the stale fuel problem by driving your car every few weeks.

IX. OVERFLOW PIPES ON SU CARBS

The overflow pipe off of the float bowl lid on SU carbs serves a dual function. It provides for overflows (which are rare with Grose-Jet float valves) to be directed to some non-hazardous location but more importantly it is the means of venting any vapor buildup out of the float chamber. A fuel level is maintained in the float bowl by the float and float valve assembly. Fuel flows by gravity to the jet orifice. If the vent pipe for some reason becomes blocked. vapor pressure can build up in the float chamber and cause severe flooding at the jet. I have seen gasoline squirt 2 feet in the air out of the jet when a vent was plugged off. The following causes have been observed:

1. End of overflow/vent plugged with dirt or rust
2. Plastic vent line got against exhaust pipe and melted end shut
3. Owner vented one float chamber into the other float chamber (tied them together)
4. Owner tied vent line from carb into vent line from fuel tank
5. Rubber vent hose kinked where it went into carbon canister
6. Vent lines cut off with side cutter pliers thus crimping tube ends
7. Carb ID. tags put underneath overflow/vent banjo thus blocking off annular vent area.

X. A. THROTTLE RETURN SPRINGS FOR SU'S

Most H series carburetors and HD-6's used a helical throttle return spring around the throttle shaft. If too little pre-load is used there is insufficient force to shut the throttle. If too much pre-load is used it makes the throttle awfully hard to open. I find 1/2 turn of pre-load to be about optimum. With the throttle closed, rotate the spring clip in a direction that will be winding the spring up. Turn until free movement is eliminated, then wind or pre-load 1/2 turn and tighten pinch bolt.

B. INLET BANJO ORIENTATION - SU CARBS

Separate inlet banjos are frequently used with flexible fuel lines, such as on the HD-8 Healey carbs. These brass banjos have one flat face and one recessed face. A fiber washer is used on each side. It is essential that the banjo flat side go towards the float lid and the recessed face go towards the bolt head. If installed backwards the rim around the recess will make metal to metal contact with the float lid boss before the fiber washer is fully compressed. This is so basic I'm almost reluctant to mention it but I do see an awfully lot of them backwards.

XI. A. SU DAMPERS -ADDITIONAL TIPS

,
The purpose of the SU damper is to retard the rapid upward movement of the piston on rapid throttle opening associated with acceleration. This delay in piston movement causes a momentary decrease in pressure at the throat thus achieving a momentary increase in richness much the same as with an accelerator pump. The weight of the oil in the damper determines the amount of dampening. A lot of race mechanics use automatic transmission fluid for some misguided reason obscure to me. I think it is too light for normal use. SU publications recommend 20 weight which I would follow. Do not overfill the damper. The proper procedure is to fill to 1/2" below the top of the hollow piston rod. not 1/2" below the top of the chamber neck. Overfilling just spills over into the suction chamber and makes a mess. One easy check is to remove the damper and then re-insert it. If you feel resistance before you reach the threads on the cap you have enough oil.

B. DAMPER RODS -SU CARBS

The damper rods can occasionally get bent which will force the damper piston off center. This will create a drag or side force on the hollow piston rod and restrict normal piston movement. Remove the suction chamber and look at the end of the damper rod with cap screwed snugly into the chamber neck. If the end of the rod appears to be in the center of the bore. everything's OK. If the rod is noticeably offset in one direction. mark the cap with a magic marker in the direction the rod needs to be bent. Remove damper and gently bend rod in the indicated direction. Several passes may be required to get it right. Visual centering is adequate as there is some lateral float in the damper piston. Just as a matter of interest. the new SU plastic capped dampers have a ball socket in the cap which allows the rod to be self aligning.

XII. VACUUM DROP TESTS -SU CARBS

SU carburetor suction chambers and pistons are furnished as matched assemblies from the factory. There is a controlled clearance and thus controlled air leakage between the piston and suction chamber bore. A convenient means of checking this is a vacuum drop test. The proper damper should be in place. Chamber and piston should be clean and dry .Check piston for any spots of drag or interference over full travel. Spray piston rod lightly with WD-40. Turn assembly upside down with piston against top of chamber. Plug holes in the bottom of piston with windshield caulking (commonly referred to as Dum-Dum). Measure the time for the chamber to slide down and fall off the piston. Specified times are as follows:

1 1/4" and smaller carb = 3-5 seconds
1 1/2" and 1 3/4" carb = 5-7 seconds
2" carb = 7-10 seconds

If vacuum drop time is too fast, carb will tend to run rich. If drop time is too slow carb will tend to run lean. If both carbs are too fast there is nothing you can do to correct. Chances are someone has sanded inside of chambers to clean them which is a no-no. If they are too slow you can polish the chambers or pistons or both. very lightly and recheck frequently for compliance. If one carburetor is fast and one is slow there is a good chance pistons have been interchanged. Try switching them. I recently had a pair of 1 1/2" TF carbs where the front was 5 seconds and the rear was 8 In seconds. Switching pistons gave me 7 seconds on the front and 6 1/2 seconds on the rear -just lovely. It is ideal if both are alike and right in the middle of specification. It doesn't happen very often. Minor disparities from specified drop times can be accommodated by tuning adjustments. If I had a 1 1/2" carb with a drop time of 4 seconds I wouldn't fret about it. If it was 1 second or 1/2 second (which I've seen) I'd hunt for some different pans. It should be noted that if you do interchange pistons. it will be necessary to re-center both jet assemblies. Ideally this type checking should be done at the time of a major rebuild.

XIII. SUCTION CHAMBERS & PISTONS - SU CARBS

Suction chambers and pistons are machined to close tolerances and furnished as selectively matched assemblies from the factory. It is essential for proper operation that the piston move freely in the chamber. The piston is center guided by the piston rod and there should be no contact between the large outer diameter of the piston and the chamber bore. With both parts thoroughly cleaned in carburetor cleaner and dried, it should be possible to spin the piston over its full length of travel without any drag or interference. Over many years service it is possible, with external dings on the chamber and burrs on the piston, for interference to occur. To remedy this I coat the large

diameter of the piston with a thin film of rubbing compound and rotate the piston in its chamber. If the interference is minor, the compound will knock off the corresponding high spots on both components and the problem is corrected. If the interference is more severe, the rubbing compound will leave a black smear on the offending area in the chamber. This smear serves as an indicator of the spot that needs to be sanded out. I use a fine grit sanding drum on a Dremel tool as an effective means to remove a spot caused by an external ding. If the compound leaves a black smear uniformly around the complete circumference of the chamber bore, chances are the pistons have been interchanged or a piston (improperly sized) has replaced the original. If black smears show up 180 degrees apart it is likely that the chamber is slightly egg shaped either from being dropped or being heat distorted while polishing. A few judicious raps with a rubber mallet near the open end of the chamber will often restore its roundness. After the piston free movement is restored, remove all traces of rubbing compound with choke cleaner on a paper towel.

XIV. PISTON SPRINGS -SU CARBS

A piston spring combined with the weight of the aluminum piston provides the necessary downward force to maintain essentially a constant pressure loss (depression) at the throat of the carburetor. The springs are initially color coded with paint for identification. The paint disappears with time. Common piston springs are as follows:

Code	Force in Oz.	@ Height
Blue	2 1/2	2 5/8"
Red	4 1/2	2 5/8"
Yellow	8	2 3/4"
Green	12	3"
Red & Green	11 1/4	3 7/8"

It is difficult to identify springs visually since ones with the same load rating may have different free lengths, different wire diameter, and different number of coils. The springs may also sag slightly with age and use. To identify and check for proper specification I have made cylindrical weights from aluminum bar stock corresponding to the above table. I put the spring in a glass tube with the correct weight on top of it and measure the compressed height. If the spring is too tall it must be replaced. If it is not over 1/2" too short it usually can be stretched. Springs can be brought back exactly to spec and matched with each other. A squirt from a can of spray paint will serve for future identification.

XV. AFTER MARKET PARTS -SU CARBS

Unfortunately, the people assembling after market carb kits don't always appreciate the significance of the original specifications, or in some cases just have poor quality control. Two items come to mind:

1. On the H series carbs the upper jet bearing copper washer is supposed to be 0.016" thick. Many after market kits have this washer 0.025" or even 0.033" thick. This holds the complete jet assembly down farther away from the needle than intended and defeats about 1/2 turn of the mixture adjustment nut (ability to lean out).

2. Jet orifice sizes are 0.090", 0.100", and 0.125" in diameter. I have made a set of pin gages to check these orifice diameters. The typical smaller gage is 0.089" diameter on one end, is 2" long, and tapers uniformly to 0.090" on the big end, When the small end is inserted in the orifice the gage ideally should become snug about 1/2 way up its length. If it slides all the way through I don't use

the jet. An orifice 0.0005" too large, and many are, may give you trouble in leaning out the mixture enough.

XVI. HD CARB SLOW RUN ADJUSTMENT

On the HD series carb the throttle plate is completely closed at idle with slow running being controlled by a needle valve by-passing the throttle plate. The choke lever actuates a fast idle cam which opens the throttle plate slightly during cold starts. The fast idle screw should have about 1/2 turn clearance from the throttle lever when the choke is in the off position. Do not set normal idle speed with this screw. Use the slow run needle valve.

XVII. GROSE-JETS FOR RACING

The virtues of Grose-Jet float valves were extolled in a previous article (#VIII.) The standard SU-301 Grose-Jet used for essentially all of the SU carbs, except the HIP series, has an orifice of 0.084" diameter. This is satisfactory for most normal use. For racing applications where full throttle accelerations or full throttle high speed runs are needed with the bigger carbs such as HD8's, an optional 0.099" orifice is available. Specify SU-301-0.099".

XVIII. AIR CLEANERS - SU CARBS

The inlet flange on SU carbs normally has 4 holes drilled in it. The two holes on the center-line are for mounting the air cleaner. Two holes slightly above the center-line are vent holes bringing atmospheric air to the underside of the piston. These vent holes must match with holes in the air cleaner shell or mounting plate. Since most of the pancake cleaners are symmetrical. they can be installed upside down thus blocking off the holes. Be Sure air cleaners are installed right side up with vent holes matching.

XIX. HS SERIES CARBS

The HS series carbs as used on BJ-7 Healeys and most Sprites, Midgets, MGB's have a small rectangular lug cast on the side of the body. This lug engages a slot in the float bowl rubber grommet to determine the tilt of the float bowl. Due to accident or rough handling sometimes the lug is broken off. It may be replaced with a 5/32" diameter x 3/8" long roll pin. Drill a 5/32" hole x 3/16" deep, drive in the roll pin and set in LocTite for good measure. It works adequately.

XX. PINCH BOLT ORIENTATION -SU CARBS

Throttle return spring clips, interconnecting throttle shaft 'W' couplings, and interconnecting shaft levers are all anchored to their respective shafts with a pinch bolt. The clips, couplings, and levers all have a recess to retain the pinch bolt head and prevent it from turning. Always install the bolt head in the recess with the nut and plain washer on the smooth side of the fitting. When orienting the fittings on their respective shafts always have the nut facing up so it is readily accessible to a nut driver for making synchronization adjustments on the carburetors.

XXI. FLOAT BOWL ORIENTATION - SU CARBS

On the H series carbs, float bowls are mounted to the carb body with a single mounting bolt. The float bowl will pivot around the mounting bolt Correct orientation of the float bowl is at right angles to the carb body. Fiber washers used with the shouldered mounting bolt will essentially lock the float bowl in place. Rubber grommets used with the later straight sided mounting bolts will allow the float bowl to inadvertently be moved. Don't let the bowl be swung too far towards the rear of the carb or it will foul the spring return clip on the throttle shaft. Carb kits frequently contain both fiber washers and rubber grommets to accommodate either type of mounting bolt. Don't intermix fiber washers and rubber grommets on the same bolt. You may not be able to compress the rubber sufficiently to get the fiber washer to seal.

XXII. TEFLON SLEEVE BUSHINGS

The HD-8 carbs fitted to the BJ-8 AH are equipped with teflon SLEEVE bushings. These minimize shaft wear and are easily replaceable. About 90% of the BJ-8 carbs I see have shaft wear less than 0.001" and thus do not require new throttle shafts. Replacement of the teflon sleeves will restore a good fit. The sleeves are furnished flat and must be rolled, much like a cigarette paper, for

installation. The sleeves are kept from walking on the shaft by split
0 retainer rings on each side of the sleeve. It is imperative that the person disassembling the throttle shaft assembly knows that the split retainer rings are there and must exercise diligence to assure that the rings do not fall out and become lost The split rings are not available anymore. Many of the replacement teflon sleeves are not precisely cut (they are too large) and thus the edges will overlap each other or the retainer rings causing binding. The proper dimensions in the flat state are 33/32" on the long edge and 17/32" at right angles to the long edge.. The sleeves may be trimmed with a straight edge and an X-Acto knife.

XXIII. SPRING ANCHOR ORIENTATION

The helical throttle return springs used on "H" series carbs and HD-6 series carbs are anchored to the body With a brass spider-like anchor having five fingers. The outer end of the spring is anchored to the shaft with a clip and pinch bolt. On the "H" series anchors the two long fingers must straddle the throttle stop lug on the carb body. On the HD-6 series anchor, which is slightly larger, the wide gap between the fingers goes over the wide lug and one long finger must bear against the thin lug.

XXIV. FORK END

Jet levers on the HD-6 carbs are connected through a threaded choke rod with a fork or clevis on each end. The rod length must be adjusted by screwing the fork ends in or out so that with the jet levers in the full off position the clevis pin will fit easily through the hole in the lever and fork end. The fork end is formed out of fairly thin metal so the threaded hole in the fork end has only about three threads. It is essential that the lock nut be tight against the fork end to prevent vibration from ruining the threads in the fork end and on the rod.

XXV. MAXIMUM SHUT-OFF PRESSURE

The original high pressure SU fuel pumps fitted to the AH only put up 2 1/2 PSI discharge pressure. Many after market pumps which are purchased because they are less expensive and readily available may put up 4, 7, or 10 PSI discharge pressure. At some point these higher pressures will overpower the float mechanism in the carburetor and cause flooding. If you have an after market pump and flooding problems, check the pump pressure with a 0-10 PSI fuel pressure gauge. It may be necessary to install a pressure regulator.

XXVI. SPRING MOUNTED JET NEEDLES

On '69 and later HS series carbs (Sprites, MIDGETS, MGB's) the jet needle was spring mounted eliminating the need to center the jet. Since emission requirements were becoming more stringent, the selection of alternate spring mounted needles for a specific engine was limited. These later carbs can be converted to fixed needles by installing a needle bush kit, SU #WZX-2003. It will be necessary to install the earlier jet bearing also which will permit centering the jet

XXVII. STRAIGHTENING JET NEEDLES

Sometimes jet needles will inadvertently get bent causing them to drag on the jet orifice subsequently wearing out both parts. Even with a new needle it is desirable to check for concentricity. Install the needle in the piston. Lay the suction chamber and piston assembly on its side. Rotate the piston in the chamber with a reflective backdrop behind the tip of the needle as a fixed reference point. I find the blue surface on a can of WD-40 works fine. A few thousandths run out is readily visible to the naked eye. Bend the needle gently in the desired direction with your fingers until there is minimal wobble or run out. Since the needle is much smaller at the tip, a very slight run out at the tip will not present a problem.

XXVIII. SU CARD FLOATS

The "H" and HD series and the very early HS-tri-carb series had brass floats. The later HS series carbs had plastic floats, some with metal hinged levers and more recently molded plastic hinges. If flooding occurs or during routine rebuilding it is a good plan to inspect the floats. Shake the float and if you hear liquid sloshing you know you have leakage into the float decreasing it buoyancy. Replacement is the best answer. Brass floats should also be buffed with a fine wire brush and the curved section inspected for hair-line stress cracks which are a potential leak source. The hinge points on the plastic should be inspected for wear. They may be worn through or paper thin with

failure imminent.

XXIX. HD SERIES FAST IDLE RODS

The HD series carbs have a vertical fast idle rod that is activated by a cam and cam shoe on the choke mechanism. The fast idle rod is moved downward opening the throttle slightly during starting and warm up periods when the choke is pulled out. This fast idle rod will often be stuck due to lack of lubrication and subsequent corrosion of the brass rod. When the rod is stuck it becomes impossible to move the choke mechanism. To free up this rod, first remove the arm from the upper end of the rod but replace the fixing screw. Buff or polish the exposed surface of the rod with a fine rotary wire brush or emery paper. Spray the exposed rod with WD-40 and gently tap the ends of the rod, working first one direction and then the other. Continue to polish freshly exposed rod areas working the rod back and forth until loose enough to be pulled out Buffing the full length of the rod after removal and spraying with WD-40 will restore its free movement. Periodic spraying of the upper rod with WD-40 will prevent its sticking again. Freeing up a tightly stuck rod is probably best done with the carburetor removed from the car .

XXX. SHAFT SEALS

The HD-6 carburetors were equipped with a cork shaft seal backed up by a beveled gland washer, a spring, and a retainer cup. Current SU kits replace the cork seal with a kind of wimpy rubber seal, part #AUD-3S77 developed for the HIF carburetor. Other seal components remain the same. Another alternative is a seal used in Rolls Royce carburetors, pan #AUC-2037. This is a substantial rubber seal resembling a master cylinder seal. With this seal the beveled washer, spring, and retainer cup are not required.

XXXI. BRASS JET LEVERS

The "H" series carbs use brass jet levers as a means to move the jet when the choke is pulled. The main pivot hole in these brass levers is 5/16" in diameter with a 3/16" clevis pin as a pivot. The ensuing lost motion allows the fast idle cam to be actuated before enrichment occurs. I see many times where owners have tried to bush this large hole thinking it too sloppy. They didn't realize it was made this way for a definite purpose.

XXXII. CHOKE ACTUATION

The manual choke on most SU carbs consists of a cable pulling a choke lever against the resistance of a jet return spring and moving a fast idle rod against the resistance of a throttle return spring. Friction in the cable, friction in the choke and fast idle mechanism, and resistance of the two springs makes pulling the choke cable a formidable task. One of my MG customers pointed out to me that if you opened the throttle with your foot before pulling the choke you eliminated the resistance of the throttle return springs making the task much easier.

XXXIII. FLOAT LEVEL SETTINGS

An illustration the AH shop manual shows setting the float level with a 5/16" bar under the curved portion of the float lever. This setting is appropriate only for the early HS-4 tri-carb series with brass floats. All "H" and HD series use a 7/16" diameter test bar. The HS series carbs with plastic floats specify 1/8" to 3/16" between the float and the lid in the inverted position.

XXXIV. BRASS DAMPERS

Reproduction brass dampers are available from Joe Curto, phone (718) 465-4829. Specify whether vented or non-vented are required. On original installations sometimes wear occurs between the threads on the damper and the chamber neck making it impossible to tighten up the damper. The reproduction dampers seem to have a better cut thread and a slightly longer threaded portion. Often, use of the new damper with a slightly thinner gasket (0.030") will allow adequate tightening.

XXXV. HD-8 JET NEEDLES

The HD-8 series carbs use a 0.125" jet and needle. Consequently there is no shoulder on the needle shank to serve as a reference point for fixing the needle in the piston. Genuine SU needles have a narrow groove cut to serve as a reference point. Some after market needles have no

reference mark at all. Before installing, take a knife edge and scribe a reference mark 7/16" down from the top end of the needle. Install the needle with the reference mark flush with the bottom of the piston.

XXXVI. FAULTY HD JET ASSEMBLIES

Recently there have been some flawed after market diaphragm jet assemblies in circulation. The jet tube has not been pressed through the spring retainer cup far enough. The effective length of the jet tube is thus too short and may still be 1/8" or so below the bridge in the uppermost position. The exposed length of the jet should be the same as that of the jet bearing. Fortunately the problem can be corrected by tapping or pressing the jet tube on through the cup until it is the correct length.

XXXVII. BJ-8 CARBURETOR PISTON SPRINGS

A previous article dealt with a means of checking the carburetor piston springs for proper height at specified load. For the BJ-8 HD-8 carbs the red/green code piston springs should be 3-7/8" high with an imposed load of 11 1/4 ounces. I find these springs have almost always sagged. often to 2-1/2" high at specified load. They can be stretched back to proper specifications with a previously described spring tester. A lighter spring pressure will tend to make the carbs run lean.

XXXVIII. POLISHING CARBURETOR SUCTION CHAMBERS

Polishing SU suction chambers to a mirror finish seems to be a popular activity with British car owners. There are two hazards to beware of. Some metal polishers get in a hurry and buff too long and too hard in one spot causing localized heating and warping of the chamber. The other hazard is losing your grip on the chamber and seeing it become air-borne landing on the concrete floor halfway across the shop. This also warps the chamber. Often the original concentricity of the chamber may be restored with a rubber mallet bumping technique previously described.

XXXIX. VENTING OF THE 100-4 AND 100-M CARBS

The float lids of the 100-4 carbs had horizontal notches cut in the lid neck for venting and did not use an overflow banjo and pipe. The 100-M float lids had only the vertical slots for venting and did use an overflow banjo and pipe. It is essential on the 100-M that the aluminum washer and strap brace for the float bowl go above the overflow banjo. The red fiber washer with the three internal tabs only should go under the banjo. This permits proper venting into the annular area between the lid nut and the banjo lower face.

XL. THROTTLE LEVER PINS

The standard taper pins for pinning throttle levers to new throttle shafts requires drilling a 0.120" hole (#31 drill). Sometimes the holes in the levers get a little sloppy and allow the lever to rock slightly on the shaft. An 1/8" roll pin fits tighter than an 1/8" taper pin and often will tighten up a loose lever. Use an 1/8" diameter x 1/2" long roll pin

XLI. BANJO AND BANJO BOLT THREADS

The float lid banjo bolt thread on H & HD Series carbs is a 3/8"-19 British straight pipe thread. Sealing of the banjo faces is accomplished with fiber washers. The male threaded connection on some SU carburetor and fuel pump banjos is a 1/4"-19 British straight pipe thread. Sealing is on a tapered seat with a union back-up nut. It was never intended for sealing to be done by the threads. American Standard tapered pipe threads are essentially the same diameter as the British threads but have 18 threads per inch. I often see where owners have tried to screw on American Standard pipe thread adapters and use teflon tape as a sealant. The thread mismatch will distort the original threads and careless installation of the teflon tape can cause strands of tape to be sheared off the thread ends and lodge somewhere in the fuel system Use the correct fitting for the job. Use teflon paste or Permatex anti-seize compound #133-K if a thread lubricant is desired.

About the author - Jim Taylor is a retired design engineer with over 30 years experience rebuilding SU carburetors and fuel pumps. This page is extracted from a series of articles on the most common problems that Jim has observed in carburetors that came to him for service. For more information, call Jim on 918-333-3444, or e-mail the website editor.

Posted: 4/28/2002

REAL HEALEY NATTER

SEPTEMBER 1994

DASHLIGHT DIMMER

Margo & Don couldn't get to the Binda Cabins Weekend and I wasn't allowed to go by myself, so I decided to "bite the bullet" (spanner actually) and have the operation.

My complaint was that the dashlights were too bright last month on the climb up Macquarie Pass, but necessary to see the instruments.

The fix was reasonably easy, a 5.6-ohm 5-watt resistor, Dick Smith Catalogue No. R-1620 was connected across the dashlight switch connections (this value could vary depending on the wattage and number of dashlight globes).

The brightness is reduced when the switch is moved to the off position. The catch is that the dashlights cannot be switched off when the head or park lights are on. This should not be a problem, as most drivers never switch them off anyway.

DMH-000
(The Hardie's 100-4)

P.S. remind me sometime to tell you of my heart (petrol pump) duplication.

TECHNICAL REPORT
LEADED REPLACEMENT PETROL

Before dealing with a couple of interesting items which have arisen over the last couple of months, I must first add a post-script to my article last month on fuel.

Firstly, I have had reports that indeed the new LRP does not seem to have the same octane rating as the leaded fuel it has replaced. Cars, which ran happily on leaded fuel, are now knocking badly on the replacement fuel. Retarding the spark slightly may help, but 1 would like further feedback on this.

Secondly, I have had a report of a car (not an Austin Healey) which filled up with LRP, parked the car in the sun, and the heat caused the fuel to expand and flow out of the cap down the side of the car. This is not unusual, and can happen to any car if overfilled what was unusual was that the spilt fuel completely stripped the 2-pack paint below the cap. It would seem that the new fuel is much more aggressive on paintwork, so take care.

Thirdly, and perhaps most seriously, the new LRP and also Optimax are reportedly attacking and softening some of the older rubber components in the fuel system, specifically fuel lines, 0-rings, and carburettor components, such as the rubber diaphragm used in later model S.U. carbies, and the rubber tip on some float bowl needles. Again, take care if your fuel lines are getting soft and mushy, they should be replaced before a serious mishap occurs. I have found currently available fuel lines to be satisfactory and Midel have replacement S.U. diaphragms and 0-rings which will resist attack by the new fuels. If in doubt, I will be happy to advise further.

To move onto more mundane topics... **DISC BRAKE CONVERSION**

I was recently contacted by a club member for advice on installing disc brakes to his 100/6. This is a rather straightforward exercise, as the later 3000 series components will literally bolt straight on to the 100/6 front suspension.

However, two important points should be kept in mind:

1. When replacing the front drum brakes with disc brakes, the 1" diameter rear brake cylinders **MUST** also be replaced with the 3/4" dia. brake cylinders as used on the 3000 series. If this is not done, your brake system will be thrown out of balance, and under emergency braking situations, particularly on a wet road, your rear wheels will lock up, causing the car to swap ends with possibly very serious, perhaps even fatal results.

2. You will also find that considerably higher foot pressure will be required to achieve the same degree of retardation, this is why brake boosters were fitted to most 3000 series cars. The most popular after-market booster is the VH44, which is relatively easy to install and is still available either new or re-conditioned.

Tip of the Month:
*When changing your differential, the easiest way to re*place *the diff oil is to pour it down one of the axle tubes (using a funnel) before replacing the axle.*

Happy Healeying,

John Dowsett

N.S.W. AUSTRALIA Austin-Healey OWNERS CLUB FLAT CHAT

April 2001

100 TECHNICAL
BN-1 DISC BRAKE CONVERSION

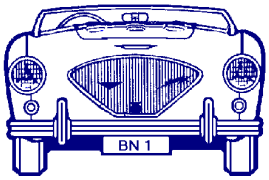

Disc DBA-138 has four mounting holes, drill four new ones equidistant between them, as per diagram (page 4). I have a drilling jig, which makes this easy, that you can borrow.

Trial fit the calipers to the brackets before plating.

Brake hose is attached to caliper by the banjo of the Camira hose drilled and tapped to 3/8" UNF. Try and get calipers complete with mounting brackets, 12mm mounting bolts, banjo end of brake hose and banjo bolt.

Brake hose has been routed as shown in photos (Page 5), it is attached to stub axle with a plastic cable tie and twisted at the chassis bracket to keep hose clear of the tyre at full lock.

Rear corner of spring tower may have to be modified so that the caliper banjo bolt is clear at full upward suspension position on full lock (Page 6).

If you have a five stud rear end, change the rear brake cylinders to the smaller diameter ones fitted to the disc brake 3000s, with the larger diameter ones the rear wheels will lock up before the fronts. I have a four stud rear end with the narrower brake shoes and haven't had any trouble

For BN2 and six cylinder use, check that the brake backing plate holes are the same as shown on the drawings and that the distance from the outside of the brake drum flange on the hub to the backing plate mounting face on the stub is 42.5 +/- 1 mm. Any differences will have to be allowed for in making the brackets. Also I am not sure if the studs on the hub are in exactly the same position.

PARTS AND SUPPLIERS - PRICES ARE TRADE AT FEB 1996. $

2 DBA 138 - DISC ROTORS (Cooper Spares Allambie Hts)	138.00
2 JB CAMIRA 1982/4(GMHolden Aust) FRONT CALIPERS (Brookvale Wrec)	70.00
2 K606S CALLIPER KITS (Cooper Spares Allambie Hts)	42.00
2 H1040 - BRAKE HOSES (Warringah Brakes Brookvale)	59.20
2 CALLIPER BRACKETS (Made by Daltex Ind. Brookvale)	295.00
CAD PLATING CALLIPER BRACKETS (Cremorne Plating Brookvale)	20.00
4 - 3/8" x 3" & 4 - 3/8" x 2" ZINC PLATED HT BSF BOLTS (Classic Fasteners Welland Sth. Aust.)	26.66
DB1075 DISC PADS (Cooper Spares Allambie Hts)	38.00
8 - 3/8" BSF NUTS (In Stock)	
8 – 3/8" SPRING WASHERS (In Stock)	
8 – 3/8" FLAT WASHERS (In Stock)	
	======
	$ 688.86

The brakes worked well without a booster, but fitting a PBR VH44 one makes them fantastic.

DON HARDIE
healeynut@hotmail.com

DESIGN OF CALIPER BRACKET

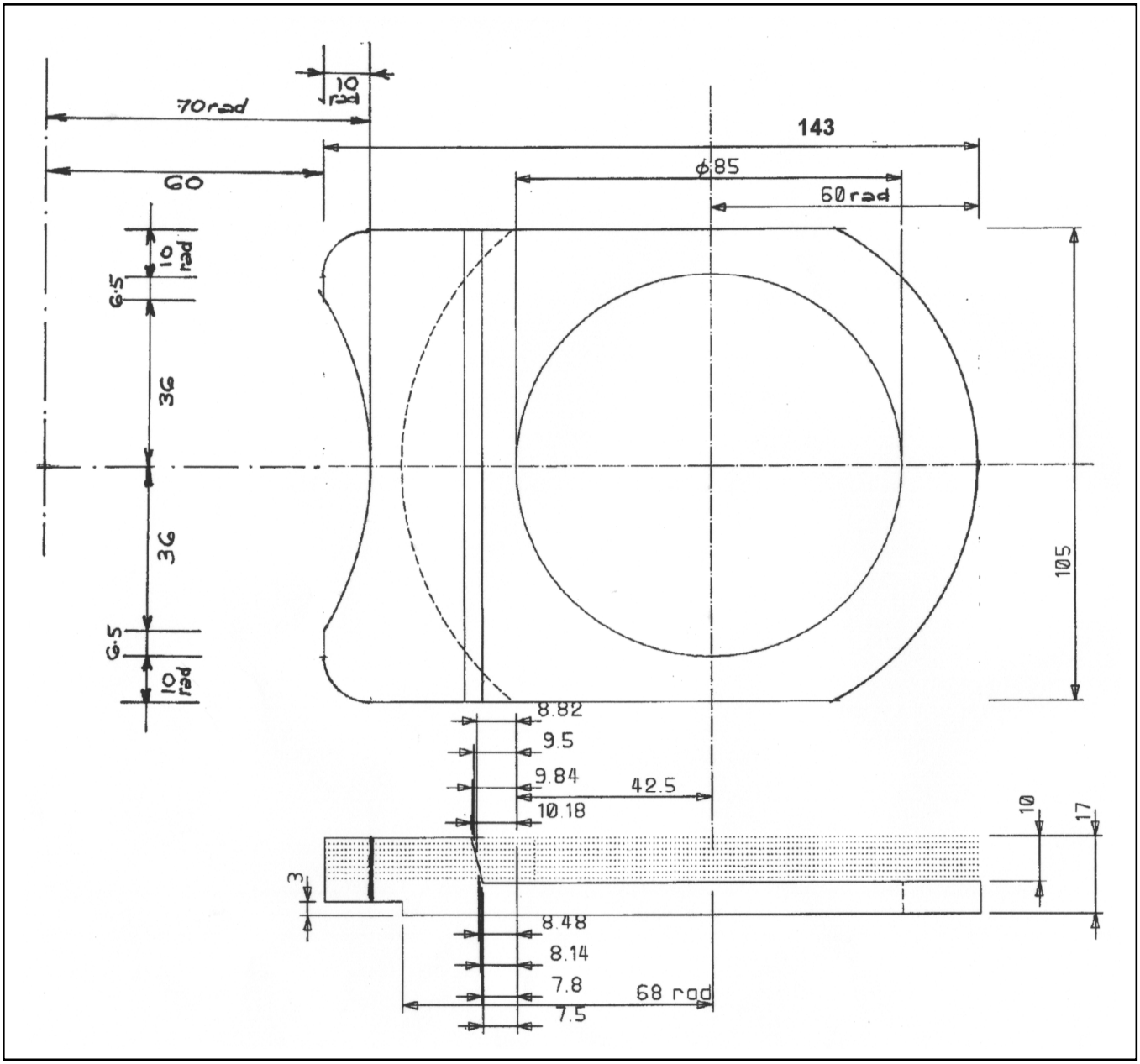

Daltex Industries Pty. Ltd.

John Blair
Managing Director

30 Sydenham Road,
Brookvale, N.S.W. 2100

Bus. (02) 939 7354
A.H. (02) 913 7780

DON HARDIE
28/2/96
DISC BRAKE CONVERSION

CHANGES TO DESIGN
DON HARDIE 27/3/96

CALIPER BRACKET DRILLINGS

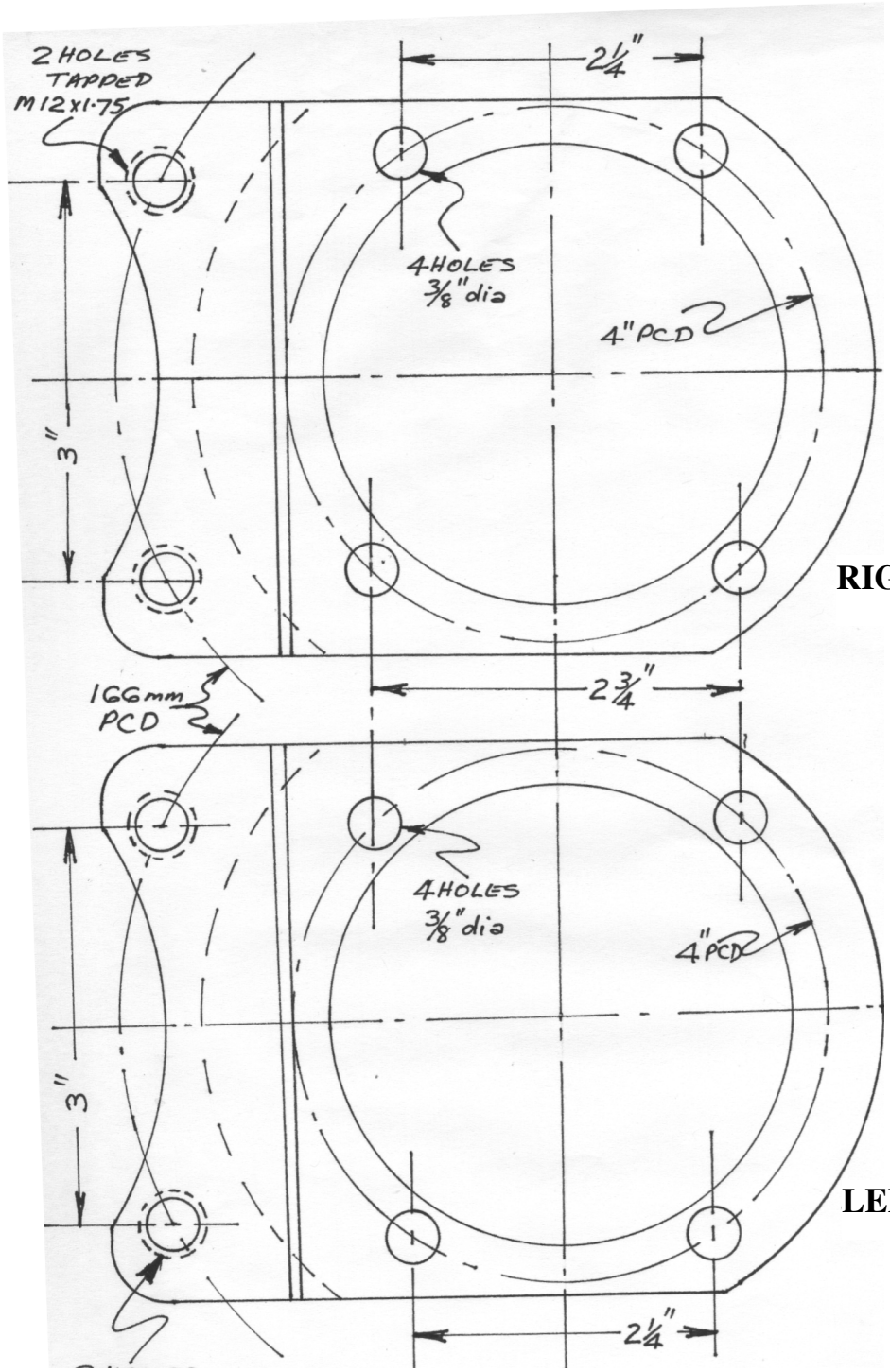

RIGHT HAND

LEFT HAND

2 HOLES TAPPED
M 12 x 1.75

DISC MACHINING

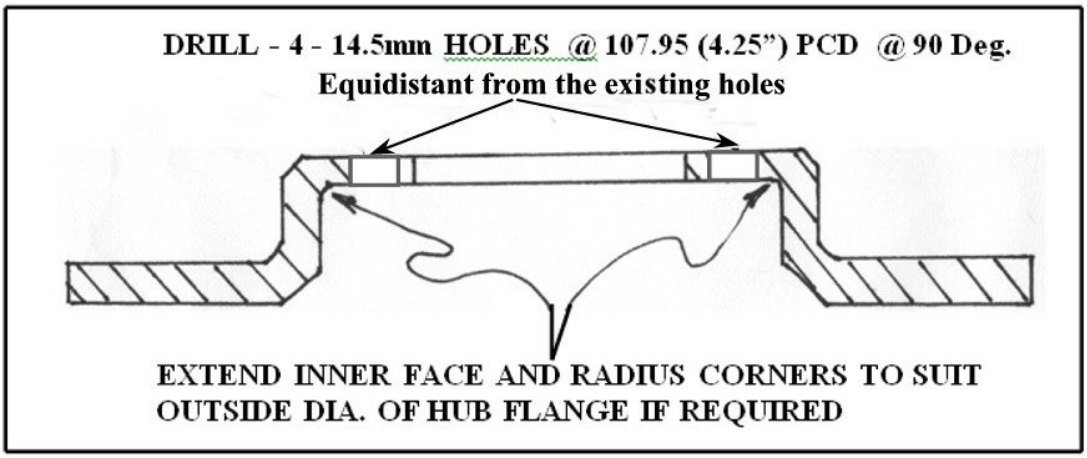

Toyota Corona 1973 to 1983 RT104 RT118 T130 XT131 RT134

DBA 138

Street Series Standard Front Solid

Key Features

- Ideal for towing and heavy load driving
- Ideal in heavy braking situations
- Performs well in wet conditions
- Looks great behind open style alloy wheels

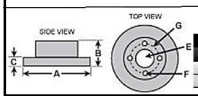

Product Weight: 0.46 kg

	A	B	C	D	E	F	G
Units	Dia.	Height	Thick	Min.Thick	Centre Hole	# of Bolt Holes	P.C.D.
mm	266	42	12.7	**11.5**	76	4	
inch	10.47	1.65	0.5	**0.45**	2.99	4	

HOLDEN	CAMIRA
	JB Sedan, St Wagon
COMPONENTS	8/82 - 10/84
FRONT WHEEL	CALIPER
Assembly L.H.	B843-076 Girlock
Assembly R.H.	B843-075 Girlock

PARTS FOR ONE SIDE

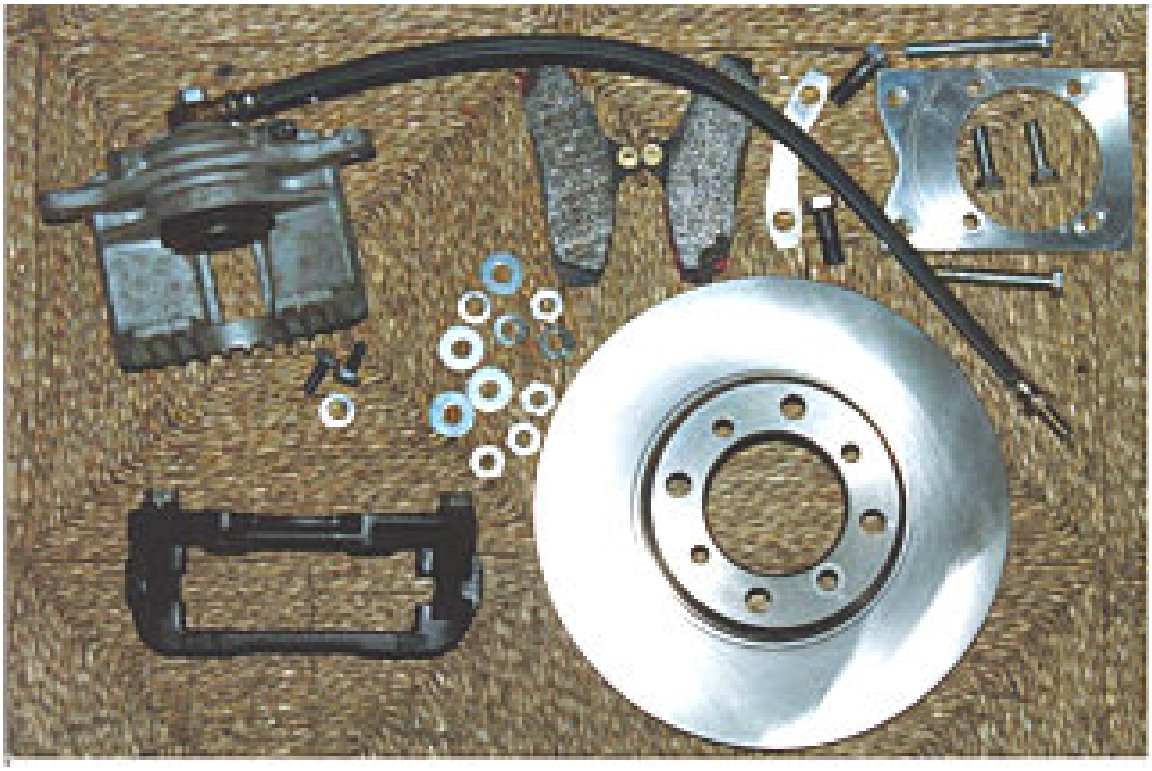

PROTOTYPE BRACKET

LEFT SIDE

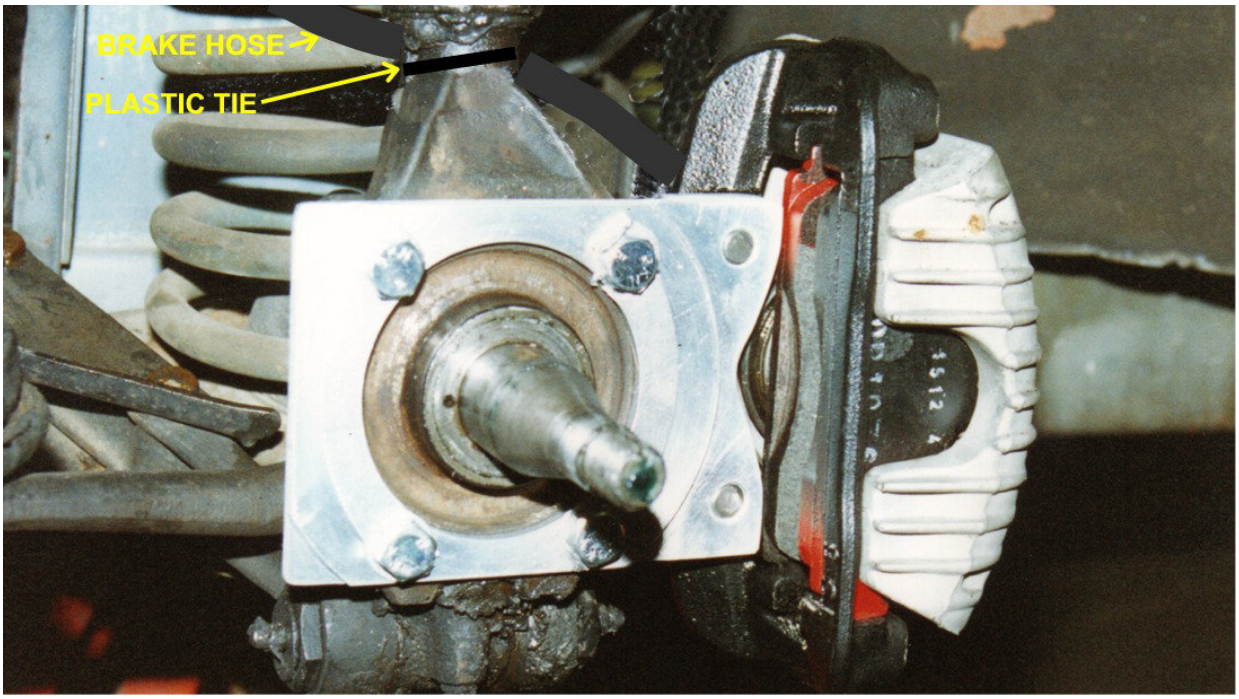

RIGHT SIDE

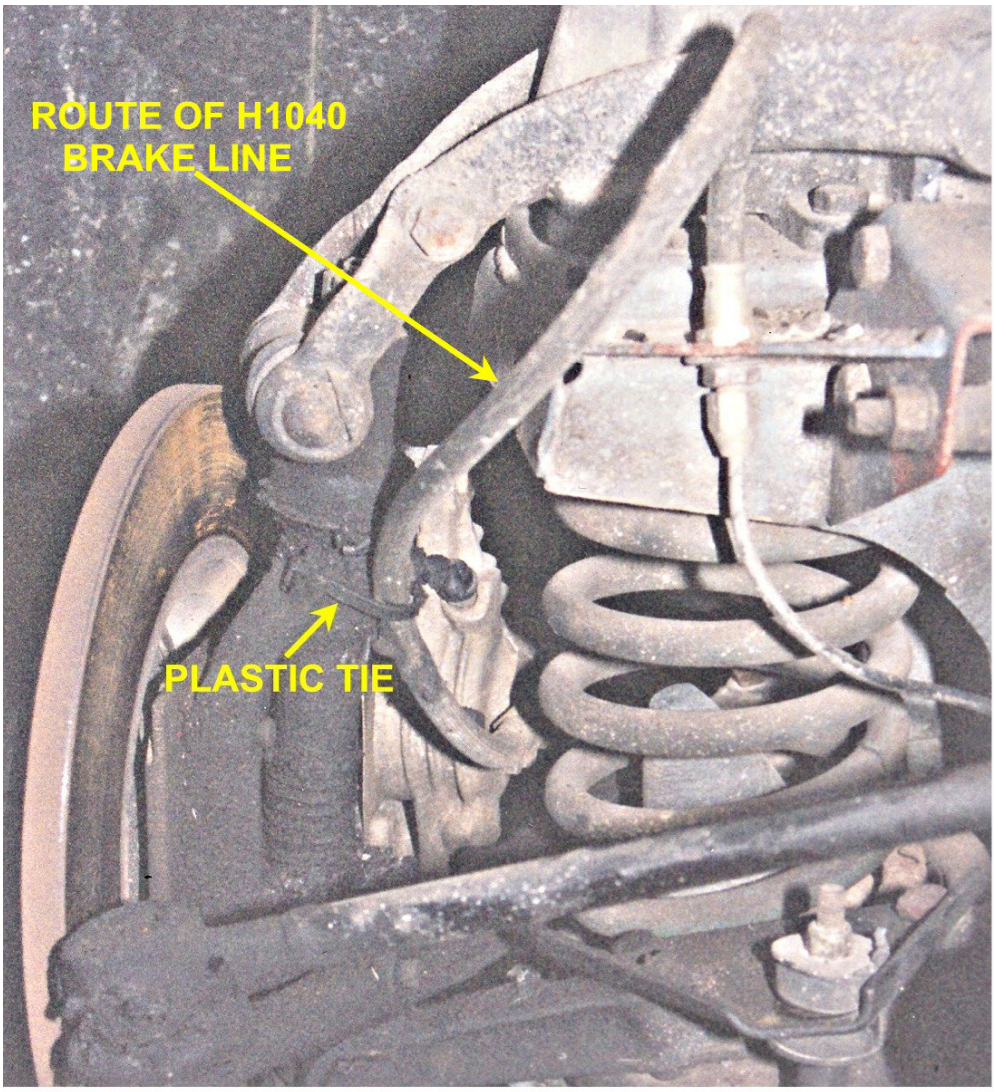

REAR CORNER OF SPRING TOWER CUT AWAY

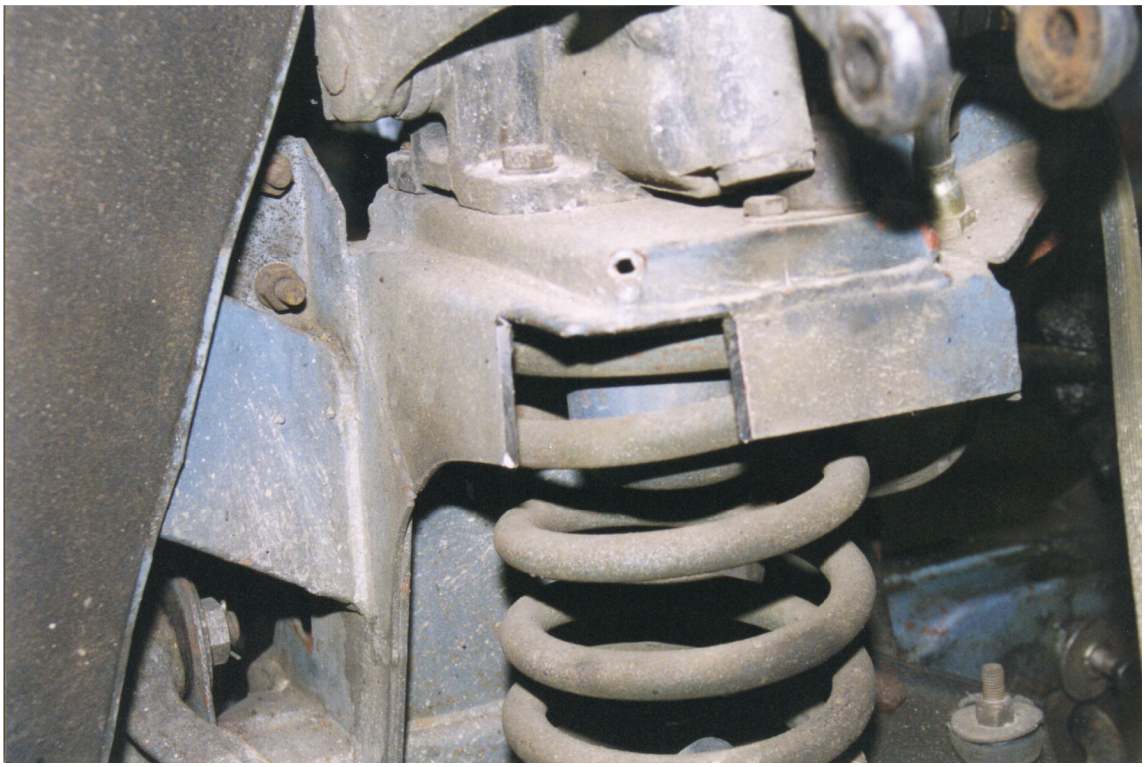

NEW STEEL WELDED IN

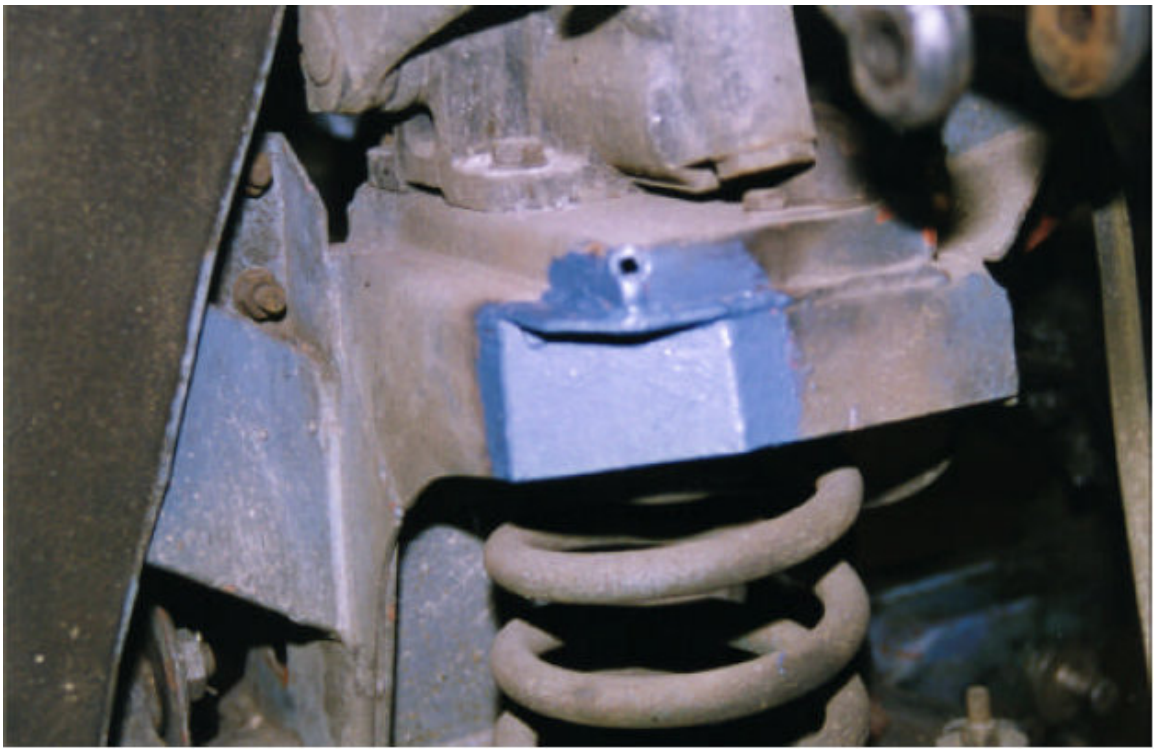

BRACKET AS SHOWN IN 3000 PARTS MANUAL

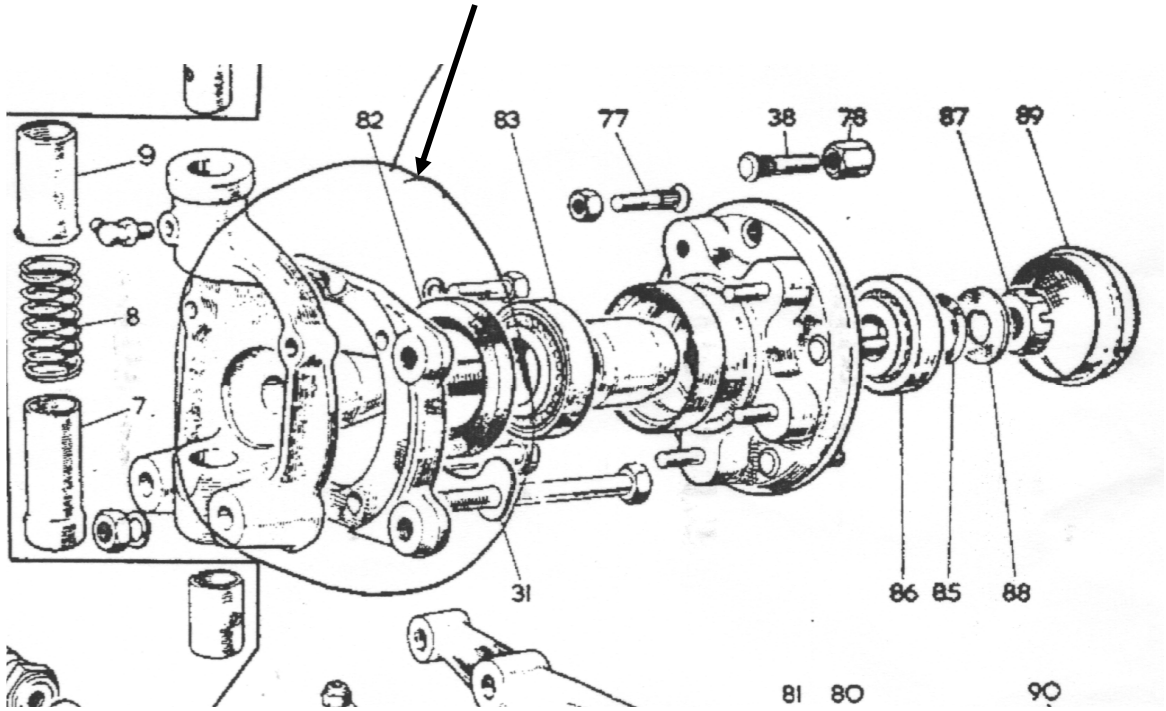

DISCLAIMER:

Whilst two cars have been fitted with this conversion and they are operating successfully, no responsibility can be accepted for any problems that occur during the conversion or afterwards.

However, corrections, improvements, suggestions & additional information will be very welcome (in writing please).

DON HARDIE

healeynut@hotmail.com

UPDATE

Now 3 Cars. D.H. 2013

Ian Anderson (now in Tasmania) owner of the 2nd car fitted with the conversion, had 6 bracket blanks flame cut out of 19mm steel, the second pair were fitted to his 100 by John Bantoff in Tasmania and there is still one pair of these in Tasmania and I don't know if it they have been fitted to a 100 as yet.

JOHN HARPER'S ARTICLES
No 1
Introduction

Having been on Eastern Centre committee for over eight years with periods as Chairman and Director, I have decided to return to my main interest; the technical aspects of Austin-Healey 100s. My interest goes back to post-war Austins, before the 100 was announced, and my involvement has been pretty well continuous since then. For the last nine years I have been the Eastern 100 Technical Secretary which has allowed me to be involved with many problems and rebuilds, and I have been fortunate to make many friends in the process. Over the years I have made notes of all queries and have built up a large library. The time has come to share all this information with other 100 enthusiasts. I propose to produce a series of articles for REV COUNTER. The only problem is where to start? Initially the selection of topics will be quite random, but later may be directed by new queries or readers' feedback.

Distributors

It is not generally realised that four different types of distributor were available for the 100. The correct type, fitted with the correct components, are essential to efficient running, best fuel consumption and, in the limit, the safety of the engine, and yet I have encountered numerous cases of incorrect fitment.

The four DM2 types are:-

Standard	early	3H 2313	(BN216 40320)
Standard	late	11B 479	(BN216 40495)
100M	early	7H 1727	(YH13 40422)
100M	late	27H 5579	(YH13/1 40520)

Lucas numbers in brackets.

The difference between early and late types is the modified contact breaker base plate, which brought about changes to the points and vacuum unit. Early vacuum units had a link to the base plate, whereas later ones used a spring. The change took place at CE 230361, which was around February 1956; about halfway through the BN2 production run. Incidentally the Lucas type and part number stamped on the body is a very good indicator of the authenticity of an original 100M conversion or kit. The camshaft is the other, but is obviously less accessible.

Replacement vacuum units, with characteristics as below, are available more readily with “push on” vacuum pipes.These are functionally sound but need the pipe modifying which detracts from the authenticity and can lose concours points. Early units with detachable ends can be repaired by using a new bellows unit and fitting the original springs and stops so long as the unit can be checked out on a rig afterwards.

Vacuum unit characteristics are :-

RADIATOR UPGRADE
&
RADIATOR FAN

In 1995 when I was fitting the narrow fan belt, the radiator, which on closer inspection showed horrendous repairs covered up by false fins, was sent off to Sydney Wide Radiators at Brookvale who made and fitted a new core with 70 more tubes and closer fins.

With this, the Texas Kooler and the louvered bonnet, over heating was no longer a problem, except in more stop than start heavy traffic. To combat this, a radiator fan was obtained from our friendly Auto Parts Wrecker (OOPS Recycler), and fitted to the body cross braces in front of the radiator. The vertical air duct had to be modified to suit.

I installed a slide switch under the dash and relay under the headlight relay.

Don Hardie

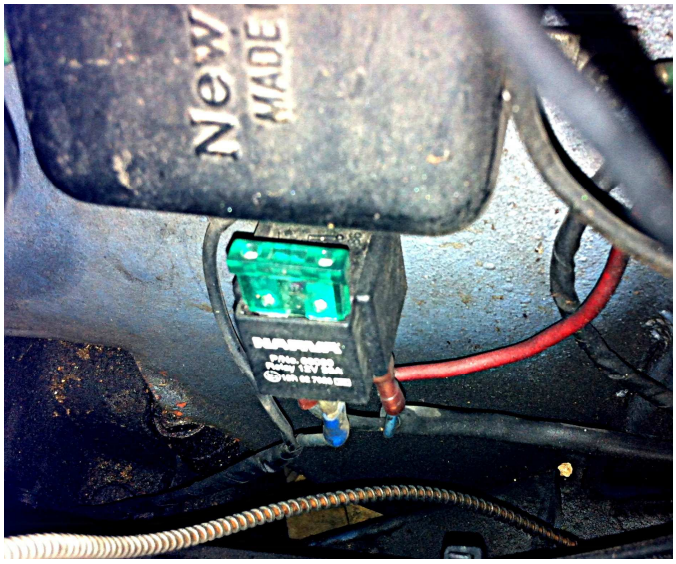

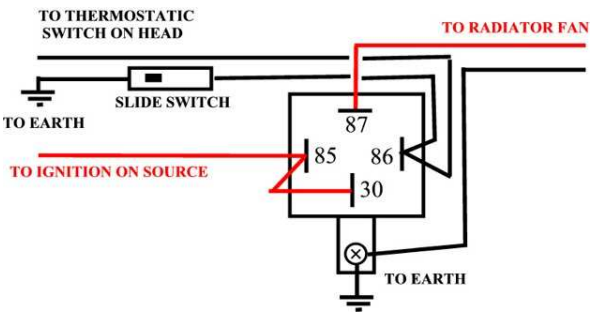

JOHN HARPER'S ARTICLES
No 1

	Standard	7-18-12
	100M	5-17-10
Contact breaker points are Lucas		
	Early	420196
	Late	423153

The later ones are more easily obtained, and the early ones are not that difficult from a good local supplier. Distributors can be converted early to late and vice versa by changing the base plate etc. as above. The weight springs are critical and must match the engine characteristics. Any modification is likely to have an adverse effect. The standard ones are of medium weight and equal length. The 100M are one lightweight and one heavy, with a slack loop that is taken up as speed increases. The correct shaft and action plate has a maximum advance of 17 degrees. This is stamped on the top of the plate.

Car Radios

If you are thinking of buying a car radio or wireless as most people would have called them in the early 1950s, then you are likely to want a period one. The model most often fitted was the Smiths Radiomobile 4100 to 4300 series, also marketed as HMV or EMI in the UK and EMITRON in certain overseas countries, notably N & S America. I know of at least one case where this model was fitted by the Donald Healey Motor Company, which is not surprising as Smiths made the effort to produce a special feature for the AH100 in which to house the control unit which screwed to the top of the gearbox tunnel. They also supplied detailed fitting instructions which showed the aerial on the top of the left hand wing, the separate power/amplifier pack on the parcel shelf, and the speaker mounted up above the driver's right (passenger's if LHD) knee. The 4100 to 4300 series consisted of a variety of control units and two basic types of power/amplifiers. The units recommended for the 100 were

Control Unit 4260 or 4262 Both being two valve, medium and long wave band with four m/w and one l/w preset buttons.
4300 Short wave version of the above mainly for use in the USA.

Power Amplifier Unit Type A Five valve 4 Watt output.

Alternatives which could be used, but not originally fitted to 100s
Control Unit 4200 Same as 4260 but with plainer flatter front panel.
4100 Single valve less sensitive unit with only two m/w and one l/w buttons use a Model B (or D if modified to 12V) and E Six valve 10 Watt output.

Incidentally 10 Watts of output from a valve amplifier is quite powerful; I have known of a dance for 200 people to gramophone records in a village hall being quite adequately served with this output. For most owners the 4-Watt version is more than adequate. The 4200/4300 series was produced from approximately 1950 to 1956 and replaced the Model

100, and was superseded by the 20OX range, although there appears to have been some overlap in production. These radios were expensive in the early 1950s and still are if you want a fully rebuilt one with a guarantee. Examples in rough or claimed to be working state can sometimes be bought relatively cheaply, but these older sets contain components that deteriorate rapidly, particularly valves and capacitors, which explains the wide difference in prices between "just working" and fully refurbished radios. So the advice is don't spend too much on an unknown example.

Front Engine Mountings

It is not usually appreciated that the front top engine mountings need setting up. This is not surprising as the instructions do not appear in the 100 workshop manual but are in the 100/6-3000 version. These buffers or "snubbers" as they are sometimes called, should be set to 1/6th of an inch clearance between the bottom of the buffer and the top of the chassis bracket. This is achieved by adjusting the number and thickness of the shims fitted between the metal top of the rubber mounting and the main engine top bracket. The shims can be removed or added easily without any dismatling as they are slotted to fit around the fixing bolt and locating peg. First loosen the main fixing nut and then slide them in or out until the correct clearance is obtained.

DISCLAIMER: Whilst every effort is made to check the information incorporated in this series, no responsibility can be accepted for errors. However, corrections, improvements, suggestions & additional information will be very welcome (in writing please).

 To contact the author please write to him at: 7 Cedar Avenue, Ickleford, Hitchin, Herts. SG5 3XU. or Telephone 0462-51970.

TECHNICAL REPORT

THERMOSTATS

Steve Copplin tried out a larger aperture thermostat that was reported in April Flat Chat. His MGA was overheating in traffic and after cutting down the outside diameter to fit the housing the maximum temperature in traffic 190 deg F and after leaving it idling in the drive 190 was the furthest it would go. He used a TRIDON – TT 2-170 that's specified for 1986-88 Commodore and Nissan Skyline. The one mentioned in last month's report is a DAYCO DT19E-BP. Steve had to cut away the base of the TRDON to clear the temp sender mounted in the head just below the thermostat housing. With this modification, the plastic Texas Cooler Fan from the Healey Factory and a fatter radiator from Sydney Wide Radiators you can solve your overheating problems. Eric Rudd has the insulating material to line the cabin and floor so you and your passenger will be more comfortable. Say goodbye to boiling the engine and occupants.

DISTRIBUTOR CARBON BRUSH SPRING

Mal French had serious backfiring through the carbies and on the road doing running repairs the spring in the distributor cap was lost in the gravel of a parking area. Someone dismantled a ballpoint pen and the spring from that was tailored to do the job, the carbon brush was refitted, and Mal rejoined the run. It's great the way everyone pitches in and helps out. It happens every time - good people Healey people.

Have Fun

Barry Campbell

N.S.W. AUSTRALIA Austin-Healey OWNERS CLUB FLAT CHAT

May 1996

REAL HEALEY NATTER

N.S.W. AUSTRALIA Austin-Healey OWNERS CLUB FLAT CHAT

MAY 1995

DMH 000 NUMBER PLATE HISTORY

If I didn't bore you last month with all that technical hooha I will try this month with the history of the N.S.W. Number Plate DMH 000.

Born in 1962, when the plates were being issued in sequence and you had to be first to write in and request the then as yet unissued plate, it has spent most of its life on ROVERS, 1948 P3-3years, 1954 P4-13years, 1968 P6 2000-5years and 1970 P6 3500-5years. You might think that this was a humdrum existence but the first 10 years was very actively spent in first The Water Board Car Club and then The Rover Owners Club, before a growing family and a new house curtailed activities.

In 1980 the bug resurfaced when Margo spotted a Mk 3 Sprite in the Manly Daily and The Sprite Club was joined, but the penny didn't drop as to the significance of the letters and the plate remained on the Rover.

In 1987 Don found me (then registered NST 800) in The Trading Post, Margo insisted on a look, I joined the family, the Sprite was sold and they joined THE 'BIG' HEALEY CLUB, but still the penny didn't drop, until in 1988 (during one of my many gearbox rebuilds) a horrified club member spotted the Rover at a meeting and said "Why isn't that plate on the Healey where it should be".

I have been proudly wearing the plate now for 7 years and hope to for many years to come, but I am sworn to secrecy as to the true meaning of the "M" (Margo reckons it is for Modification).

Now we have close to Factory (Experimental Department at least) approval. When I was presented to Roger Menadue at his welcome to Sydney at the Sherman's he looked at the plate and said quietly, almost reverently, "DMH yes Donald Mitchell Healey".

DMH-000
(THE HARDIE'S 100-4)

P.S. Did you notice in the Technical Report last month that 50% of 6/3000's in attendance
"FAILED TO PROCEED"----- FOURS FOREVER !!!

UPDATE 01/01/1997

DMH 000 is now again on the family tin top and I am wearing Club Plate 062

UPDATE 01/01/2003

The Road and Traffic Authority has taken over Club Registration – it is now called Conditional Registration – and my Rego No is now - 22067-H (NSW HISTORIC VEHICLE)

MOUNTING IGNITION COIL ON STEERING COLUMN

Over the last 4 years I have had three ignition coils fail on my BN1, the first was a Lucas one that was on the Healey when I bought it in 1987, the replacement Pertronix Flamethrower only lasted 202 miles and then it failed. I fitted my spare, a Lucas 4th Month 1966 (I always carried a spare. Don't you?) and when a replacement came from America I fitted it. This one lasted just on 4 years, Pertronix said they hadn't any problems with these coils and offered to replace it if I returned it to the USA, I declined the offer as the cost of postage is nearly as much as a new coil here.

There was a lot of discussion among car nut friends about the cause, the only suggestion that could be offered was that the heat from its engine mounted position may have had something to do with it and that it might be a good idea to move it to a position that would be cooler.

The only place I could see was on the steering column, so I fabricated a bracket for that purpose and mounted the 1966 Lucas coil. The high tension and wiring loom leads reached and I only had to extend the distributor low tension ones. Changing the coil to the 1968 Lucas one I now carry as a spare, should be a lot easier should I have to do it in the future.

6 Cylinder owners could use this idea when fitting an alternator.

Don Hardie 9/12/2012 healeynut@hotmail.com

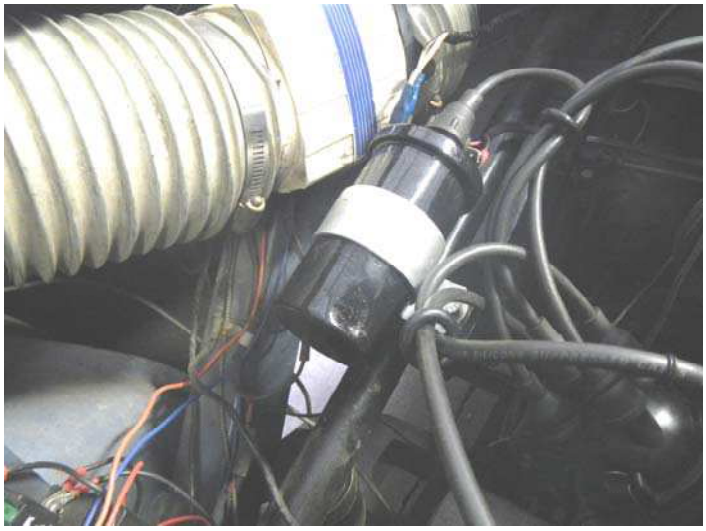

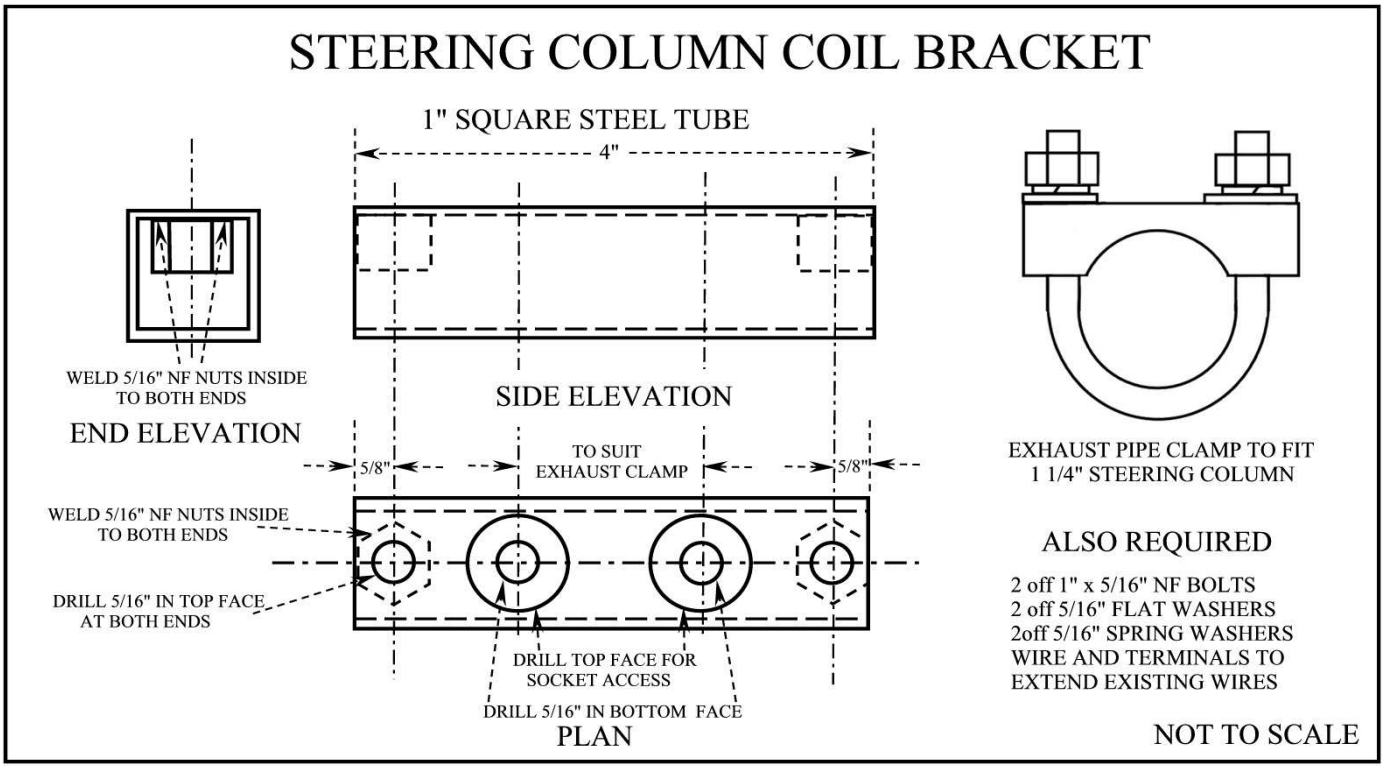

REAL HEALEY NATTER

ELECTRONIC IGNITION
1995

I'll encroach on Barry Campbell's area again, as you may be interested in my latest modification - Electronic Ignition. It is a Hall Effect unit (LU 142A) that was on display at The Motor Trade Fair and is an Ignitor Kit made in America by PerTronix of Covina California. The sensor unit replaces the points and condenser. It fits over the point's post, secured by the screw that held the condenser and is triggered by magnets in a plastic case, which pushes over the cam.

Changing the points and resetting the advance will be a thing of the past.

Should the unit fail all you have to do is remove it and replace the points, condenser and wiring to be on the move again. I carry a spare base plate with points and condenser already set up, so the change over should be simple.

Update 2007

NEGATIVE EARTH battery polarity is no longer vital so make sure you get the correct one.

I don't know who the current distributor is but if you Google – Pertronix with the part number – on the internet you will find companies in the USA which will supply one at a much better price than I paid in 1995.

Pertronix now make a coil to suit, but if you have a sports coil that will do fine.
Use a rotor the same as the one shown in the photo as some other types foul the electronic unit.

Don Hardie

NEVER CHANGE POINTS AGAIN!

PERTRONIX PERFORMANCE PRODUCTS

IGNITOR® Electronic Ignition

For over thirty years, the Ignitor has proven itself in applications ranging from race cars to tractors. The Ignitor replaces breaker point and troublesome factory electronic ignitions with a dependable, self contained and maintenance free electronic ignition system. The Ignitor has been called the "stealth" ignition because of its quick installation and nearly undetectable presence under your distributor cap.

FEATURES

- Delivers twice the voltage to the spark plugs, increasing horsepower, fuel economy, and spark plug life.
- 2:1 improvement over "points" in current fall time for increased coil output.
- Rotating cobalt magnets trigger a Hall Effect integrated circuit . ...no points to burn, ...no moving parts to wear out.
- Epoxy molding makes our module impervious to dirt, oil, grease and moisture.
- Fits entirely inside the distributor. No "black box" to clutter the engine compartment.
- Stable timing ...no need for any adjustments.
- Will trigger most multi-spark CD ignitions.
- Use with Flame-Thrower® 40,000 volt coil for optimal performance.
- Available for 6 and 12-volt negative and positive ground systems.
- Legal in all 50 states and Canada (C.A.R.B. E.O. #D-57-2).
- Guaranteed for 30 months... We Stand Behind It!

Temperature Range: -50° to 300° F.
RPM Range: 0 to 15,000 RPM.

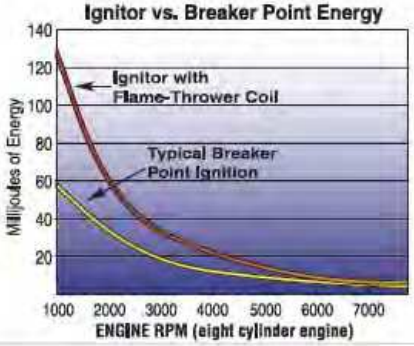

Year	Cyl.	Vehicle Model	Footnotes	Dist. Number	Dist. Make	IGNITOR Part No.
Austin-Healey						
1954-56	4	100 early distributor	57, 70	DM2P4	Lucas	LU-241
1954-56	4	100 late distributor	57, 71	DM2P4	Lucas	LU-149
1958-61	4	Sprite	57, 71	DM2P4	Lucas	LU-149
1958-71	4	Sprite	57	25D4	Lucas	LU-142A
1958-71	4	Sprite	57	23D4	Lucas	LU-148
1957-63	6	All models	57	DM6	Lucas	LU-165
1963-68	6	All models	57	25D6	Lucas	LU-162A

Footnotes

57 Also avalaible in positive 12-volt polarity, add P12 to part number
70 Early DM2 distributor
71 Late DM2 distributor

REAL HEALEY NATTER

As I have a later 25D4distributer fitted, I used an Ignitor No 142A,

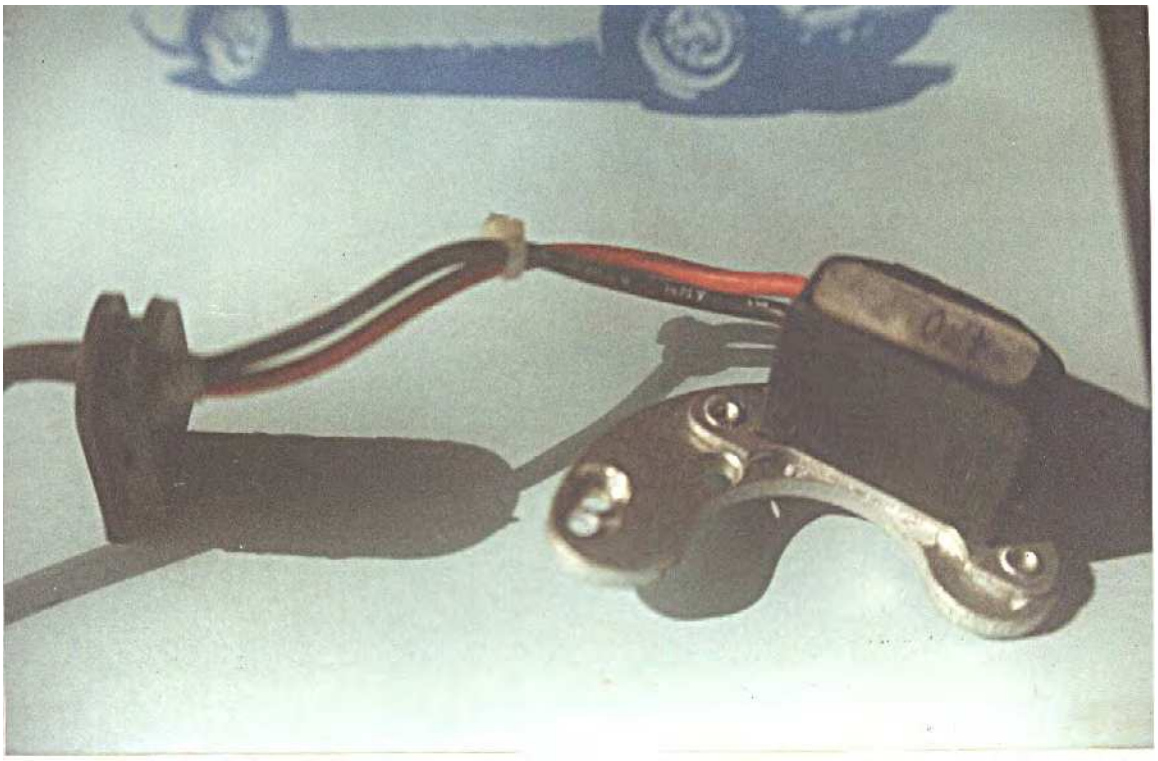

DISTRIBUTOR NUMBER Earlier distributors have the number on the side.

REAL HEALEY NATTER

AS FITTED

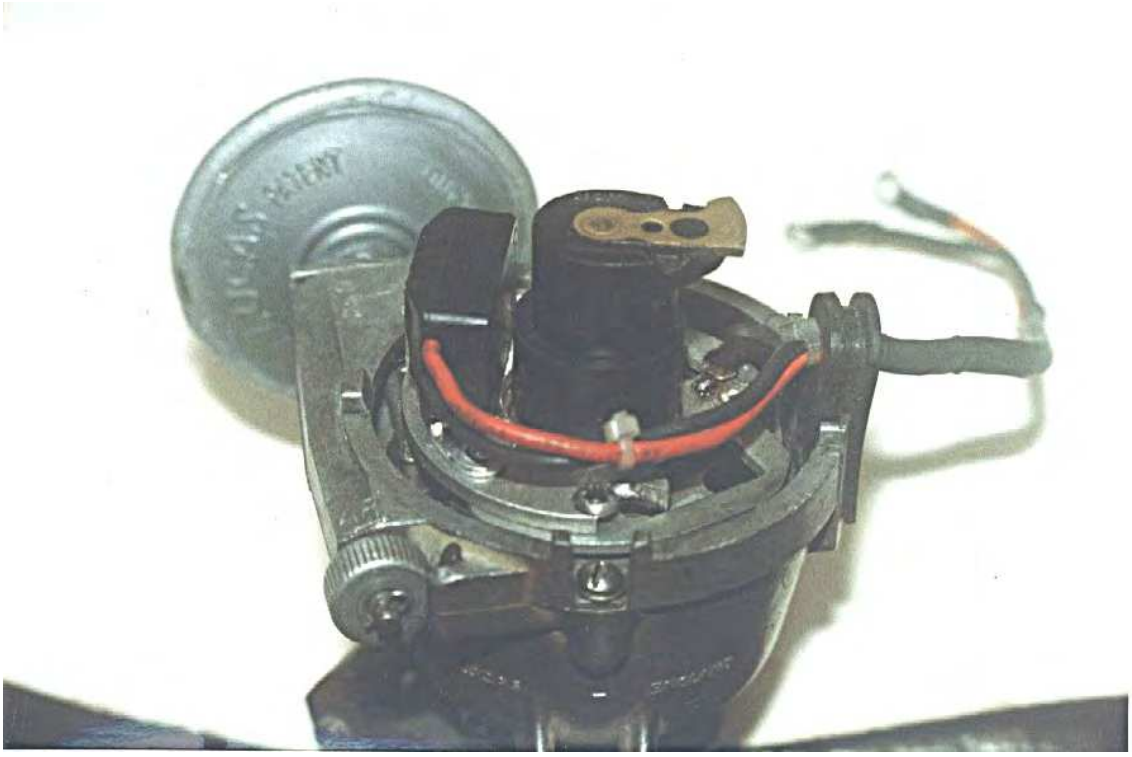

TECHNICAL REPORT
EMISSION TESTING DAY

N.S.W. AUSTRALIA Austin-Healey OWNERS CLUB FLAT CHAT

September 2001

The main activity last month on the technical front was the Emissions Testing Day at the R.T.A. Depot, Penrith. The test Installation at Penrith is highly sophisticated, and according to the R.T.A. officers, one of the best, if not the best In Australia.

Each vehicle is tested on a dynamometer against a load, which is pre-set according to the weight of the car. The test simulates a typical journey under various traffic conditions, including an up-hill section and a Freeway section, and is identical for every car so that the results can be fairly compared. During the test drive the exhaust emissions are continuously analysed for total Hydrocarbons (THC), Nitrous Oxide (NOX), Carbon Monoxide (CO), and total Carbon Dioxide (C02) and printed out on a graph. The total fuel usage is also calculated for each vehicle and reported as litres per 100km.

Although under proposed new legislation there are no plans to establish emission limits for classic cars, nevertheless our cars compared very well with what would be expected of well-maintained, efficient vehicles of our period, and the R.T.A. officers were very pleased.

A total of 12 cars attended, and following is a tabulation of the vehicles and their fuel usage. As may be expected, of the big Healeys, the 4 cylinder cars returned the best fuel economy.

FUEL ECONOMY		RESULTS	
Driver	Vehicle	L/100km	
1 .	Sprite 948cc	6.325	
2 .	Sprite 948cc	8.807	
3. Don Hardie	100-4	9.870	
4. Colin Goldsmith	100-4	10.458	
5. John Dowsett	A70 Ute	11.687	(with100-4 Motor)
6. Alan Mitchell	100-4	11.757	(1 st run)
7. Ian Howard	100-6	12.923	(l st run)
8. Rod Richards	3000	13.005	(1 st run)
9. Eriks Skinks	Austin 1800	13.487	
10. Rod Richards	3000	15.149	(2nd run)
11. Alan Mitchell	100-4	15.269	(2nd run)
12. Ian Howard	100-6	15.479	(2nd run)
13. Terry Bancroft	3000	15.549	
14. John Kent	3000	17.049	
15. Chris Dimmock	3000	20.352	(1 st run)
16. Chris Dimmock	3000	22.141	(2nd run)

Congratulations to all who brought their vehicles and made this morning a success. Also a special thanks to the R.T.A. staff - Catherine Barlow, Guido Zatschier, Paul Walker and Michael Paterson for their courtesy and helpfulness and a thoroughly professional approach.

Happy Healeying,
John Dowsett

ENGINE BALANCED

The engine parts were balanced when the engine was reconditioned in 1999 at 34,445 miles on the speedo.

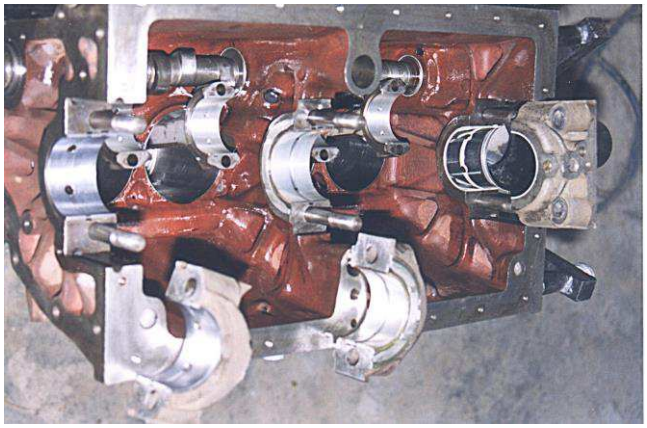

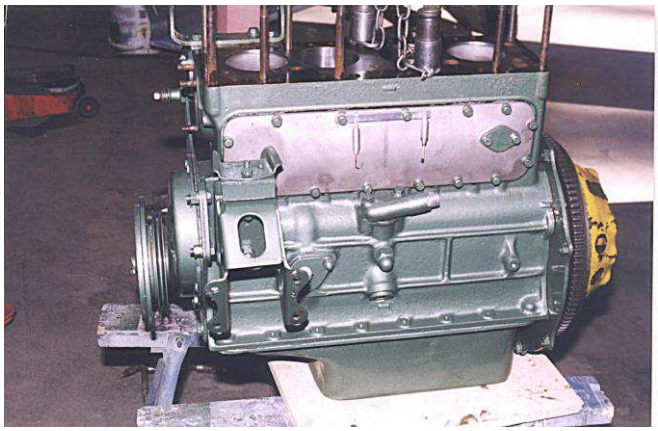

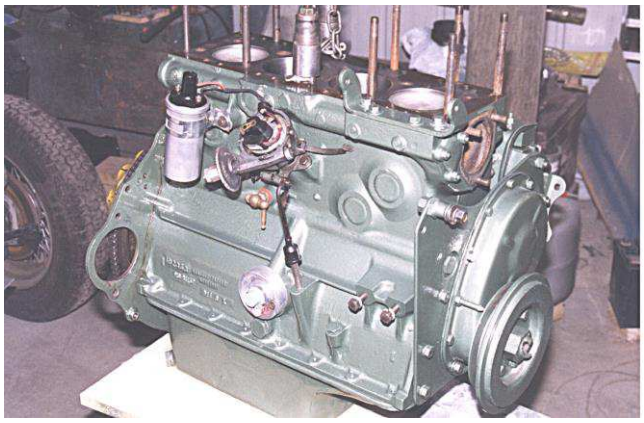

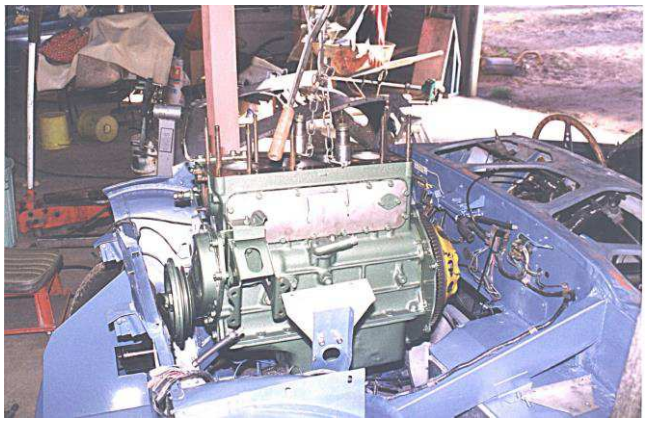

Don Hardie 08/04/2015

REAL HEALEY NATTER

ENGINE STAY RUBBERS

This article is for BN 1 owners and those who would like to be.
A recent look under the gearbox showed how much (not if) it had leaked. Every thing was covered in oil but the level hadn't dropped to the eye, but the rubbers in the engine stay had swollen and had started to disintegrate. So a decision was made to do the right thing and replace them.
Falcon sway bar link rubbers are the same size as the rear ones, and NOLTEC Urethane ones were obtained, as they won't be troubled by the oil. The rear 2 fitted easily, but as the hole in gearbox is large (3/4"), 2 - 7/16" flat washers and a piece of plastic tube were needed as shown below. The plastic tube is to keep the stay reasonably central in the hole so is not critical, even rubber could be used as when everything is assembled not much oil can get to it.
The bushes come in a packet of 8 so when the above was finished the other 4 were used to replace the shaggy rubbers on the Panhard rod.

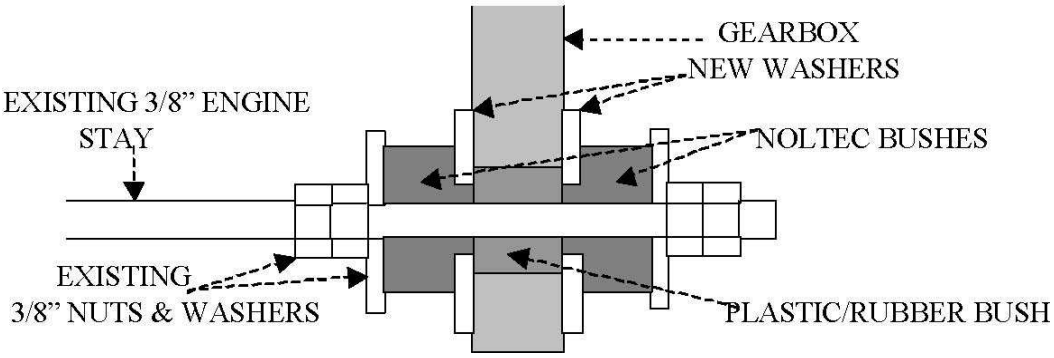

PARTS
1 - set Noltec N21014 (or equivalent urethane) sway bar link bushes.
2 – 7/16" ID x 1 3/8" OD x 1/16" Thick plated washers.
1 - 3/8" ID x ¾" OD x 5/8" Long plastic or rubber bush

(A piece of 3/8" fuel line would do the job.)

062
(THE HARDIES 100)

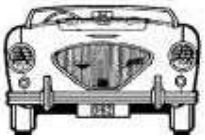

PS – A warning has since been received that these bushes may be too firm for the Panhard rod, so they have been replaced the with rubber, again falcon ones.

ENGINE VENTILATION

The engine ventilation was altered when the Rover V8 HS6 carburettors and a replica 100M cold air box were installed.
The ventilation plastic pipes were arranged to go from the carburettor vent pipes to a T then through a positive crankcase ventilation valve, to the pipe on the rocker cover.

The crankcase exhaust vent tube which comes off the cam follower cover, was removed and blanked off with a ¼” plate, the plate blanking off the mechanical fuel pump position was fitted with a ½” outlet pipe, which is connected to a fitting in the bottom of the cold air box with a ½” ID rubber tube. This is now the crankcase ventilation inlet with filtered air from the cold air box.

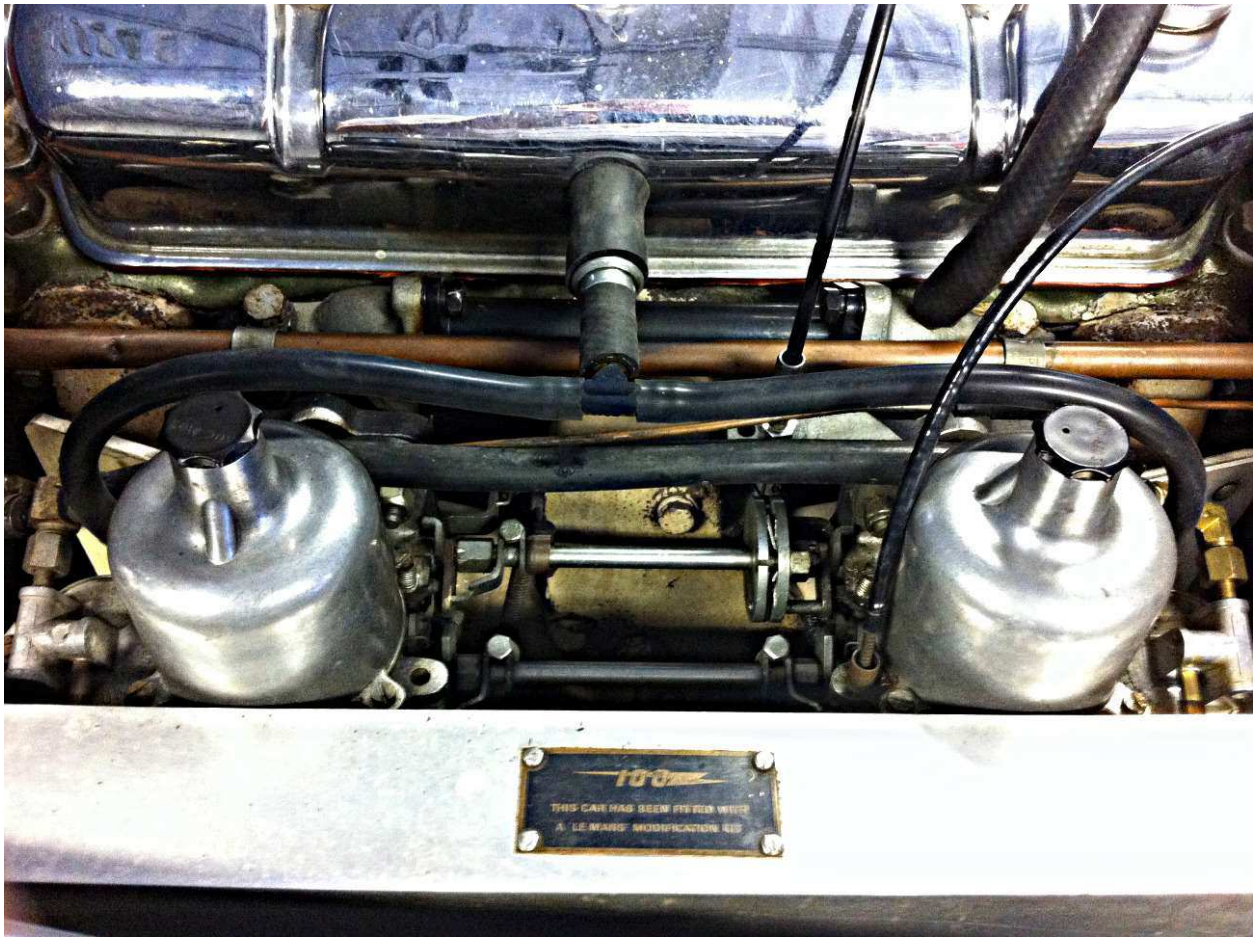

100 TECHNICAL

EXHAUST MOUNTS

Healey exhaust mounts have the habit of shearing the steel to rubber bond at the most inopportune time, so when an Extractor, which did not leave enough room to refit the (not so flexible) flexible section, was fitted. My thought was that the mountings should be more flexible and less prone to shearing due to the Four's "Tractorlike" vibration. On hand were two KM Magna figure 8 rubber exhaust hangers so these were pressed into service.
Two brackets were made as shown below. Mounting to the exhaust posed a problem but ingenuity won out and exhaust clamps, with beheaded bolts welded thereto, were used. The front of muffler mounting was not used to allow for more flexibility.

KM MAGNA Exhaust Hanger.....Pt No MB252856 (Not cheap)

Collar (2 for each Hanger).....Pt No MB059938

Similar types of hangers could be used and the brackets made to suit.

CENTRE HANGER BRACKET -Mounts to existing chassis position

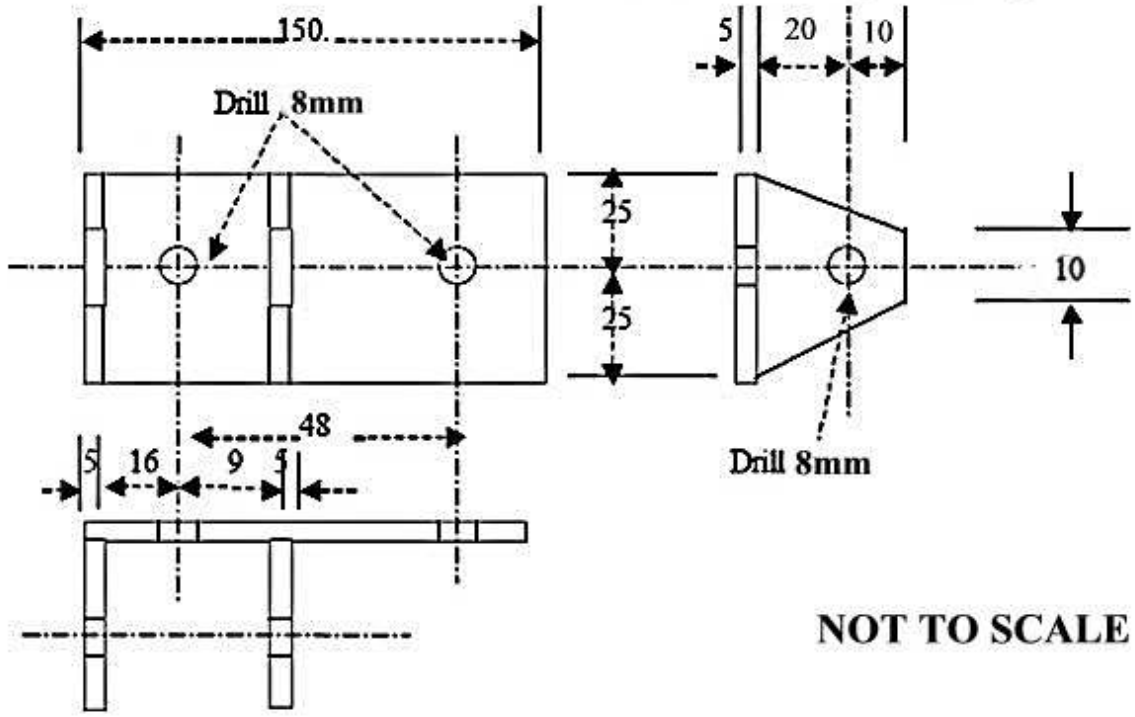

REAR HANGER BRACKET–

Mounts to existing chassis outer bolt position and a new hole had to be drilled in chassis for the inner bolt. I will measure this one up if you need it, just ask.

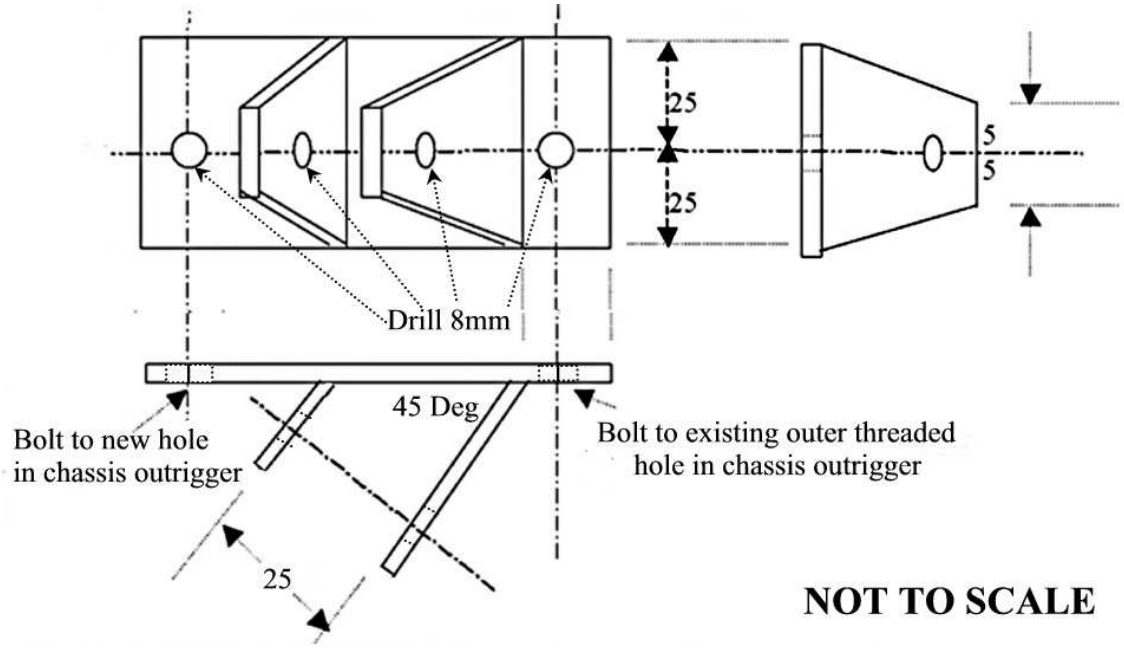

MODIFIED EXHAUST CLAMPS

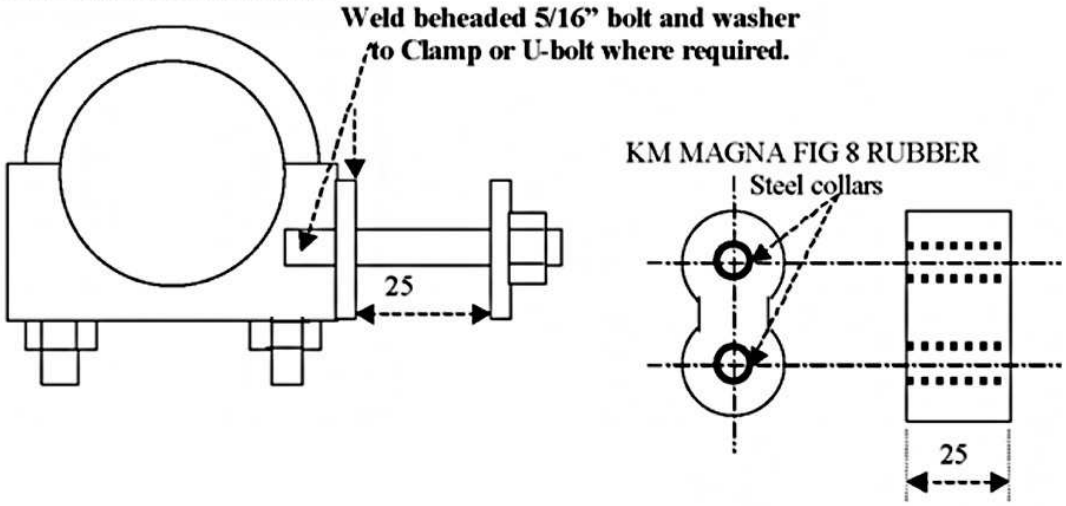

Barry Campbell's method of holding the exhaust up, so that if (when) the Healey Mount gives way the exhaust won't drag on the road.
You should do this before you fit the Mount.

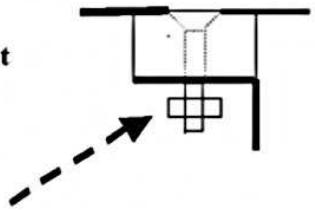

Drill ¼"and counter sink for ¼" W countersunk bolt and do up self-locking nut leaving 1mm clearance.

Don Hardie 19-03-01

UPDATE 31/08/10 See page 3

The Extractor rusted away some time ago so the original front and flexible pipe had been refitted. When I recently had the muffler and tail pipe renewed I found the front of the muffler was hanging down putting a lot of strain on the flexible coupling pipe. Luckily I had a spare rubber hanger and some 25 x 5 steel bar in stock.
I removed the remains of the original Healey hanger, which had been there for many years, refitted the outside bolt, to seal the hole and drilled another 100mm from the inside hole towards the centre of the car and at right angles to the chassis. The new bracket (below) was bolted into place, the hanger rubber fitted and the muffler clamp modified as above.

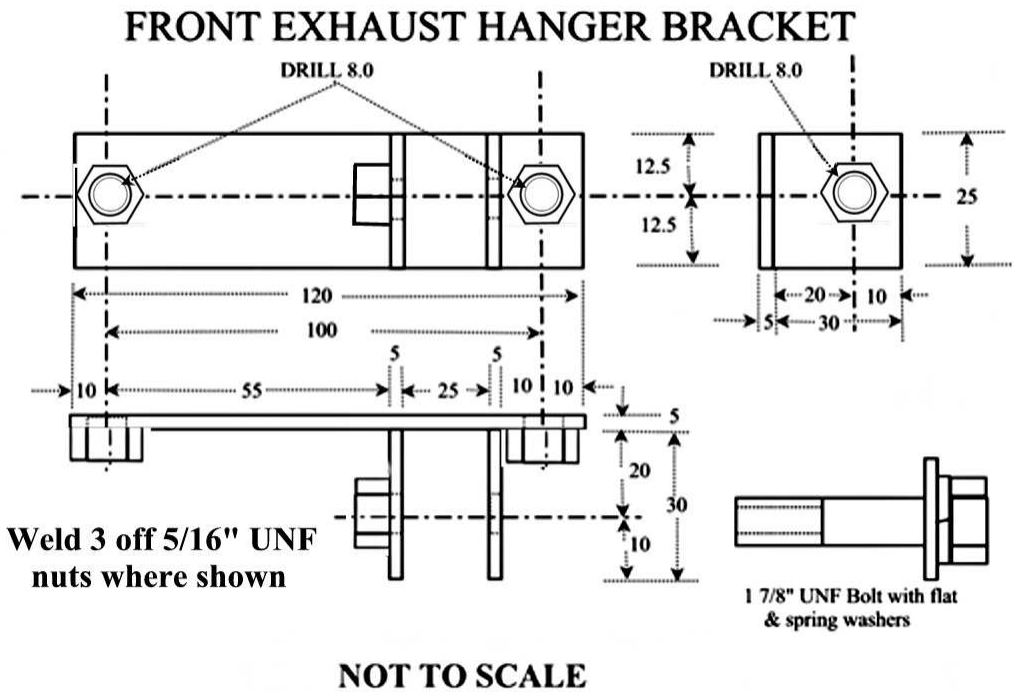

FRONT

CENTRE

REAR

Don Hardie 31/08 2010

REAL HEALEY NATTER

JULY 1995

FOUR SEAT 100

With no club event on the June long weekend I had to get out on the Sunday, so I took Don and Margo out to lunch at Avalon (I didn't pay because I was left out in the street). Sports car spotting is always a part of any outing and this time the list included a Triumph TR 6, an MG TF, 3 Ford Capris (one with the hood down) and a Blue over White 100-4 with, shock horror, passengers in the rear. Eric Rudd later explained that it was non-member Chris Langdon's car that has a 6 Cylinder rear shroud and seats fitted (sacrilege!).

A fine day dawned for the run to The Model Park at Luddenham and ?? Healeys ventured out into the bright but cold morning. This was the day when the Big Boys with their Little Toys were visited by the Big Boys with their Big Toys. Every one enjoyed watching the 200 MPH tethered cars, radio controlled planes and boats, control line planes, slot cars and rides on the Live Steam Trains. Some of the small Healeyites were taken around the picnic area behind a superb miniature Traction Engine.

On the way home along Victoria Road, I was passed by a White E Type Convertible, the driver acknowledged a wave and then did a double-take when he passed the Hallias Four in front of me. One Blue 100/4 seemed to be ok but two in a row was just too much for him.

DMH-000
(THE HARDIE'S 100-4)

P.S. It was good to see the Quinn's BN-3 out for the second time in the week (I still consider it a Four with impeccable factory history).

TECHNICAL REPORT
FUEL GAUGE NEEDLE JITTERS

The jittery needle with the jim-jams that flicks from side to side will eventually wear out the needle as it bangs against the stops on either side. This at least indicates that the gauge is working.

The fuel gauge is a "current meter" and is connected on the "hot side" B (Battery) with a green wire from A4 on the 35amp fuse, is switched on from A3, from the ignition switch and is therefore protected by the fuse. A second green wire attached to the B terminal of the gauge Provides power to the heater motor switch if fitted, or electric tacho on later models. The other terminal on the back of the fuel gauge, T (tank) green with black wire, is connected to the sender unit on top of the tank. This is the earth wire and its resistance is varied by action of the sender unit float movement from full to empty.

This earth wire is connected to one end of a finely wound copper resistance coil that's inside the top of the sender unit. Sliding along this coil is one or two metal wipers attached to the float at the pivot point at the base of the sender unit housing. As the tank empties the float drops down and the wipers move further along the resistance coil decreasing the amount of resistance thereby raising the current to gauge so that no resistance equals empty or "O" on the gauge.

The integrity of this variable earth relies upon the contact between the float pivot and the housing. As this pivot wears a poor contact occurs and as the float bounces around on top of the fuel this bad earth is turning the gauge on and off and the fuel gauge needle is frantically waving good-bye to you.

Earthing of the sender unit housing relies upon contact with the fuel tank, which is earthed via the copper delivery pipe that goes to the fuel pump that is bolted to the chassis. On some cars this copper pipe is cut to take an in-line fuel filter and earth contact is lost. The tank is not a reliable earth as it is mounted in place on rubber and secured with rubber lined metal straps. If this is the case it will be necessary to add an earth wire from one of the sender unit securing screws to the chassis.

To provide a good earth between the float and the sender unit housing, solder a flexible braided wire from the float arm and attach the other end securely to the housing with a 4 BA bolt. Drill into the thickest part of the housing next to the pivot point.

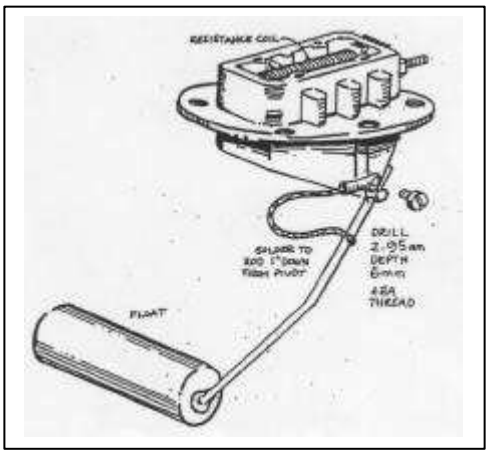

Flatten the ends of some cotton buds and carefully clean the sides of the coil with some lighter fluid. Be careful of the metal wipers. Don't bend them.

Connect an ohmmeter to the terminal and the housing. Raising and lowering the float should show a resistance range from 0-2 ohms (empty) to 75-85 ohms (Full).

It is best to do this job with the tank almost empty. When the tank is full the level is higher than the sender unit and the unit itself fills with fuel.

Fit the modified unit to the tank without the coil cover lid fitted, and attach the Green with Black wire. Switch on ignition and by gently pushing on the coil wipers with a wooden or plastic rod ensure that the float is sitting on the bottom of the tank. The fuel gauge needle should be right on the 'O' mark. If not bend the float rod slightly until correct. Now gently pushing on the coil wipers, raise the float until it hits the top of the tank. The gauge should now indicate F. If this is not so and your sure of all connections then the gauge itself may be the problem. Take it and the sender unit to Olympic Instruments. Kits with gaskets and braided wire available, or bring your sender unit in to me.

Have Fun
Barry Campbell

Date ?

MORE ON FUEL GAUGE NEEDLE JITTERS

On Saturday 19 we fitted the sender unit modification to eight cars, John Thornton BJ8, Christine Lyttle BJ8, Allan Whitehouse BJ7, Charlie Britten BN2, Steve Shepard BJ8, Rodney Richards BJ8, Brian Small BJ71/2 and Ian & Jenny Hancock Morris 8 (don't know how that one slipped in). Most reported that their fuel gauges were now working properly and no more needle jitters. Steve Shepard's fuel gauge appears faulty and Charlie Britten whose sender unit is a different replacement sealed unit can get the gauge to work but loses his overdrive switch, so he's got some wiring to sort out. We had a good session and Allan Whitehouse was so exited exclaimed “I can't wait to get home, stick it in and see if it works" – raised eyebrows from all. Anyone interested in having this modification done bring your sender unit in and I’ll drill and tap and solder the wire on. The kit with gaskets is $15.00. Give me a call. The units vary a bit with the wire connection opposite the float and on the same side as the float. The only way to check correct fitting is to make sure the float goes into the front of the tank and not the centre or sideways

Revesby Stripping & Coating 2/4 Violet St Revesby Phone 792 3411 are offering members a complete auto stripping and coating service. Abrasive blasting, media paint stripping and derusting non-invasive and selective stripping on the car – steel, alloy, fibreglass, plastics. Hot aluminium spraying for exhausts, manifolds etc. Could be a good venue for a tech day in'95. If you’re interested ask for Paul Bucclarelli

Have fun and a Merry Christmas to all,
Barry Campbell

December 1994

FUEL GAUGE DAMPENER

Slows needle fluctuations in fuel gauge.

Solder two wires to the capacitor (be careful not to overheat it), install heat shrink tubing over the connections and over the capacitor. The diagram below is for negative earth, switch the wires over for positive earth.

When the ignition is switched on it takes a while for the needle to rise to the fuel tank level and when the ignition is switched off the needle goes to full and takes a while to drop to empty. The needle gets a bit jittery when the fuel level is under 1/4

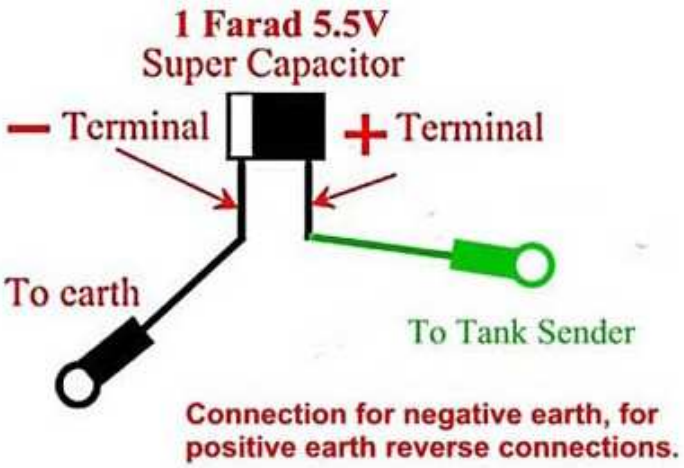

If you don't like it in the boot near the petrol tank, you can mount the Super Capacitor behind the dashboard and connect the positive terminal to the T terminal of the fuel gauge and the minus to any available earth.

Don Hardie
healeynut@hotmail.com

REAL HEALEY NATTER

ELECTRIC FUEL PUMP SAFETY

In cars fitted with an electric fuel pump, if the engine stalls following an accident and a fuel line breaks, petrol will still be pumped out the fuel line until the battery is disconnected or the ignition is turned off and sometimes neither of these are considered in time to stop a fire. On some models of fuel injected cars like the Commodore a special relay called a tachometric relay is used to control the fuel pump, this type of relay requires two feed wires to activate it, one of which is the signal from the coil negative terminal.
Because most older cars fitted with an electrical fuel pump do not already have a relay fitted and the pump takes it's supply directly from the ignition switch, fitting one of these relays is very simple

This circuit is for negative earth vehicles because tachometric relays are polarity sensitive.

Always disconnect the battery before working on any car's electrics.

By following the wiring details below you will be able to install the relay and have a much safer car.

1. The first step is to find a suitable mounting place under the bonnet, or behind the dash, for the tachometric relay.
2. Locate the wire which runs from the ignition switch to the fuel pump, cut it and extend the ends to reach the new relay.
3. Connect the wire from the ignition switch to pin 15 of the relay.
4. Connect the wire to the fuel pump to pin 87 of the relay.
5. Connect pin 31 of the relay to earth.
6. Connect pin 50 of the relay to the starter solenoid wire from the ignition switch.
7. Connect pin 1 of the relay to the coil negative terminal.
8. Finally connect pin 30 of the relay via a fuse to the battery.
9. Double-check all connections and wiring.
10. For extra safety connect the coil positive terminal to pin 87b of the relay.
11. Reconnect the car battery and test.

The fuel pump will only receive power when the starter is activated or the engine is running

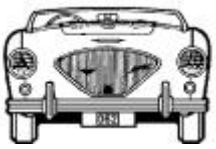

062
THE HARDIES 100

PS.The above is reproduced with the kind permision of RESTORED CARS MAGAZINE from their May-June 01 edition and might be of interest to some members, particularly our competition ones.

.

TRANSISTORISING AN SU FUEL PUMP

This conversion reduces the current at the points and consequently the burning of them.
It is a good idea to clean and polish the points or replace them if they are too badly burnt.

Dick Smith Component Numbers
FOR NEGATIVE EARTH - Transistor MJE2955T Catalogue No - Z2005
FOR POSITIVE EARTH – Transistor MJE3055T Catalogue No - Z2008
Diode 1N4004 (or 1N4007) Catalogue No - Z2304 (or Z2307)
Resistor 47Ohm ½ Watt (or1Watt) Catalogue No – R1242 (or R1442)
Cost $ 1.92 on 05/04/2005

Enlarge the transistor mounting hole, remove the centre lead and wire up as shown. The only difference between the negative and positive earth pumps is the transistor type and the diode on the negative earth pump has the banded end connected to the terminal and on the positive earth pump the banded end is connected to the transistor. I used a 1Watt resistor (all that was available at the time), insulated with the covering stripped off some wire, removed the tag off the pump wire that went to the points and soldered it to the end of the transistor emitter lead. It was a bit fiddly but not too hard.

The pump is now ticking happily away an only time will tell how long it will go. I have another pump mounted and connected to the fuel lines and a changeover switch so if it does stop I won't be stranded.

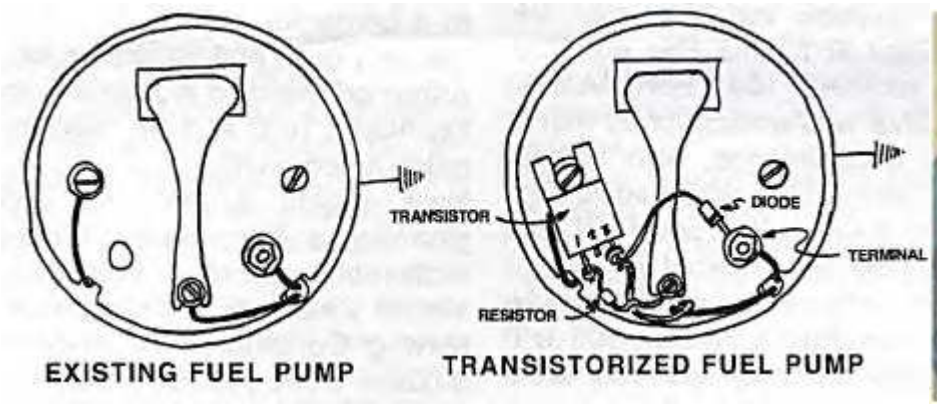

Diagrams and picture are for NEGATIVE EARTHED pumps.
The idea and diagrams were taken from David DuBois article in a Jaguar Club website and the picture is of my pump.

Don Hardie

JOHN HARPER'S ARTICLES
No 7A
FEBRUARY 1991

Fuel Pumps

All one wants from a fuel pump is the capability to deliver sufficient petrol to the carburetors under all plus reliability of operation. The simple answer is to buy a new or reconditioned unit from a reputable supplier, who is familiar with the needs of a 100, but this can be expensive and pumps are getting rather scarce. The alternative is to purchase a pump from an auto jumble or to recondition your own, existing unit. This is where the complications can start as there are a wide variety of pumps available and it is important to use one with the correct characteristics.

The first major point to understand is that the 100 needs a pressure pump. Most pre-war cars that use the SU pump had it fitted under the bonnet at the same height as the carburetors. These were basically suction pumps. They lifted the petrol up a maximum of 42 inches on the input side; the output pressure being rather low. The 100 followed the later trend of fitting the pump down low near the fuel tank. The output pressure had to be a lot higher as the fuel had to be pumped forward and up to the height of the carburetors. An allowance also had to be made for a car climbing a steep hill.

The most frequent problem that I have come across is that owners have fitted a low pressure L type suction pump, the body of which Is approximately 2.5/16th inches long. Fuel starvation when accelerating or running at high speed is the most likely symptom. What often catches owners out is that these pumps are readily available, both new and reconditioned, as they were used on the Morris Minors. These cars were fitted with the L pump and were produced in large quantities for a long time after the 1 00 had ceased production.

Some owners may by now have bought the recently published book: ORIGINAL AUSTIN-HEALEY The Restorer's Guide to 1 00, 1 00-Six and 3000 by Anders Ditlev Clausager, the BMIHT archivist.

This is an excellent book but on the subject of petrol pumps, Page 23 column 3, makes the classic error of calling a high-pressure pump an L type thus perpetuating the confusion. I have raised this with Anders who points out that the 100-workshop manual states the same, so the confusion started in 1954 or before.

The Morris Minor pumps to avoid are AUA 25 and AUA 66 plus the not so numerous AUA 35, 58, 79, 89 and 91. If in doubt about an unmarked pump then don't fit it.

The original pump fitted to the 1 00 was the AUA 36 which is a high-pressure pump with a main body which is longer than the L type at 2.7/8ths inches. It also had HP clearly visible on the casting. Unfortunately these pumps were not very reliable as they

relied on the single contact points of the earlier pumps and had no spark suppression capacitor fitted. The higher current and duty cycle of the HP pump led to heavy contact deterioration and early failure.

Externally, these can be identified by the flat contact cover. The recommended replacement was the AUA 56 as fitted to early 100/6s. These had dual contacts, a spark suppression capacitor and a "stepped" cap into which the capacitor fitted.

The AUA 56 is the best compromise between authenticity and reliability but the purist might like to make up a "special" as it is possible to fit dual points and a later type smaller capacitor under the AUA 36 flat cap. In my view dual points and a capacitor are essential for a reliable operation and even then I would recommend checking and if necessary changing the points at 12,000 mile intervals.

It should be easy to identify a HP pump by its longer body. Unfortunately the manufacturers' decided in 1961 to standardise on the short 2.5/16th inch body and discontinue the HP range. They added 1 00 to the part number, hence AUA 56 became AUA 156. This was a similarly rated high-pressure pump with dual contacts and a suppressor.

It was later superseded again by the steel spindle diaphragm type AUB 156 and later this was standardised to the AUB 154 where it might be necessary to change the terminal knob.

In practice almost any 12-volt single pump with the correct base in the range AUA 45 to AUB 184 Can be used on the 100 so long as the following is adhered to:

1. The diaphragm and coil assembly are not touched.
2. The unions are changed where necessary.
3. Double points, capacitor and cap are fitted if not already. Check, if a polarised capacitor is fitted that it is correct for a positive earth system. It is likely to need reversing.
4. Lucar connectors are removed and replaced with an original terminal knob.
5. Low-pressure L type pumps as listed above are avoided.

A few further tips: Pump fitting bolts are 1/4 inch BSF. Pipes and flexes must have a minimal inside diameter of 1/4 inch. I have experienced problems where a front fuel hose of smaller diameter has been fitted. Don't change the size of the carburetor float chamber valves as these are selected to match the HP pump pressure. Always fit the original rubber sleeve if it has survived, or tape up the cap to body joint to stop water getting in,

JOHN HARPER'S ARTICLES
No 7A

In a future issue of Rev Counter I will be covering the subject of suitable pumps with higher outputs.

DISCLAIMER: Whilst every effort is made to check the information incorporated in this series, no responsibility can be accepted for errors. However, corrections, improvements, suggestions & additional information will be very welcome (in writing please).

 To contact the author please write to him at: 7 Cedar Avenue, Ickleford, Hitchin, Herts. SG5 3XU. or Telephone 0462-51970.

N.S.W. AUSTRALIA Austin-Healey OWNERS CLUB FLAT CHAT

August 2000

FUEL TANKS AND PETROL GUAGES SOME OBSERVATIONS

I have had some fuel supply issues in the Healey lately. Especially on the track - and mostly when the tank has only been about half-full (or less). I've probably now over-engineered my solution, but 1 did find out some interesting things of relevance to those with a standard fuel tank...

Firstly, its worth checking whether or not your fuel tank is 'level'. This may sound a little strange -- but the strap locating system used in Healeys tend to make the standard tank sit down lower at the rear of the car, than the front. And the fuel pickup is at the front of the tank.... So you can end up with a tank that is half full, and yet you won't be able to pick up fuel e.g. going up hill, cornering hard etc. So next time you find a spirit level in your hand, your car parked on a level surface, and your boot lid open - place the spirit level on your tank. As Healeys have their front suspension set lower than their rear suspension - the spirit level should indicate that your tank slopes towards the front of the car... If it slopes towards the back of the car - you should seriously consider packing under the rear of the tank (with solid builders foam, rubber or cork) to make the tank slope towards the front of the car (i.e. towards the fuel pickup).

Secondly, if you find that your fuel gauge still reads one quarter of a tank when the tank is actually bone dry - then you have managed to fit your fuel sender 180 degrees out. The fuel sender float should face the **front** of the car, if you have a standard Healey tank. The float itself will then sit into a recess in the bottom of the tank, when the tank is empty, and the gauge will then read empty.

HOPE THIS HELPS SOMEONE ELSE...

Chris Dimmock

GEARBOX HEAT SHIELD

While looking through a Catalogue (as you do) I spotted a gearbox rubber heat shield and decided to make one as I already had the BN1 gearbox out.

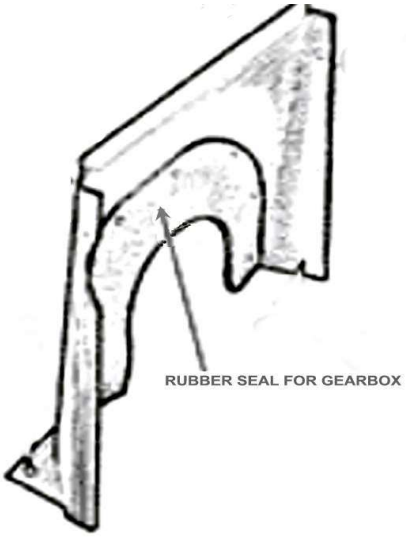

Getting the shape of the 1/4"sheet rubber right was a bit of a fiddle, but I eventually got it right.
When I fitted the Celica gearbox it was still ok as I had used a modified A70 bell housing to bolt the Celica box to.
I can now put my hand on the Ash Tray without getting severely burnt and the interior is cooler as there is close to no heat radiating from the gearbox cover.

Don Hardie 2015

CELICA 5 SPEED GEARBOX INTO A 100

The rear wheel drive Toyota Celica Steel Case 5 speed gearbox (W50) can still be found, I was lucky as I'd had one under the bench for 16 years just in case. I also had an A70 gearbox case and cut the rear off with a jigsaw at the front of the side plate hole, to make it easier for the machinist to work on it.

Check the distance from the front of the gearbox case to the front of the input shaft, if it is not 185mm, the 179mm distance in the Side Elevation will have to be altered by the + or – difference.

Any good clutch shop should be able to supply a 230mm clutch plate with splines to suit the Celica

The machining and welding was done by David Stoodley of CNS Engineering Wyong NSW, he made, and has kept, a jig to centre the 25 mm plate to the centre of the bell housing.

Fit the 6201 2RS bearing into the aluminium bearing adaptor and then the adaptor into the flywheel.

The Celica box is centred by the front bearing retainer, fitting into the 106mm hole in the 25mm aluminium plate. I cut the front tube extension off the front bearing retainer so it wouldn't foul the Healey clutch thrust.

I cut the heads off 4 - 12 x 1.25 x 100 setscrews to make studs to screw into the gearbox, as there was insufficient space to get bolts in from the front side of the 25mm aluminium plate.

The sliding output shaft was altered to bolt up the existing tail shaft (see Page 6).

If you ever have to remove the gearbox all you have to do is undo the 4 - 19mm nuts and slide the gearbox out leaving the bell housing and starter attached to the motor.

Check the ratio of the gearbox output shaft to the speedo drive of the Healey and the Celica gearboxes, if they are the same all you will need is the Toyota angle speed-o-adapter and a new speedo cable. If they are different you will need an inline Ratio Box to suit as well, see page 7.

Don Hardie
healeynut@hotmail.com

UPDATE
A second 100, in Tasmania, has had a Celica gearbox fitted in 2014 using this info

		PARTS FOR FITTING CELICA GEARBOX	
		STEEL CASE CELICA OUT OF E3 BMW 2500 (1995?)	100.00
13/09/11		FORWARD GEARSHIFT TOWER (JOHN HALL)	165.00
02/12/11		SPIGGOT BEARING 6201 2RS (WYONG BEARINGS & SEA	6.60
09/12/11		BUSHES FOR CLUTCH SHAFT "	16.50
16/12/11		FRONT & REAR OIL SEALS (WYONG BEARINGS & SEALS	11.55
18/12/11		GASKETS (JOHN HALL)	32.00
07/02/12		MODIFY BELLHOUSING (DAVID STOODLEY CNS ENGIN	400.00
01/03/12		STEEL FOR COVER (ANGEL'S ROOFING)	32.96
08/03/12		CARPET & VINYL (DALEYS)	150.78
16/04/12	**FITTED**	SPEDI SLEVE & OIL SEAL (WYONG B & S)	32.00
17/04/12	**77,651**	EXH FLANGE GASKET (HEALEY FACTORY)	14.00

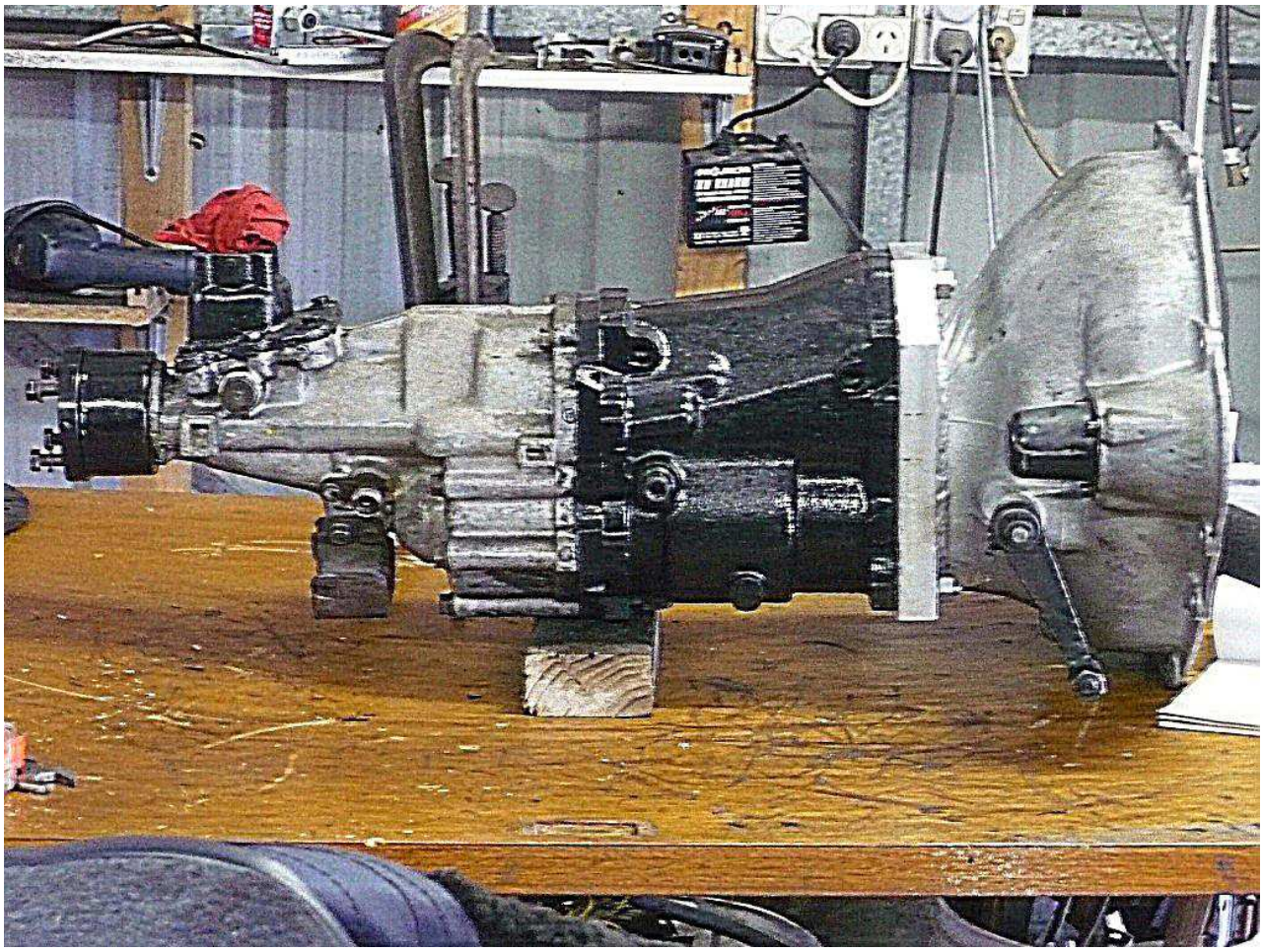

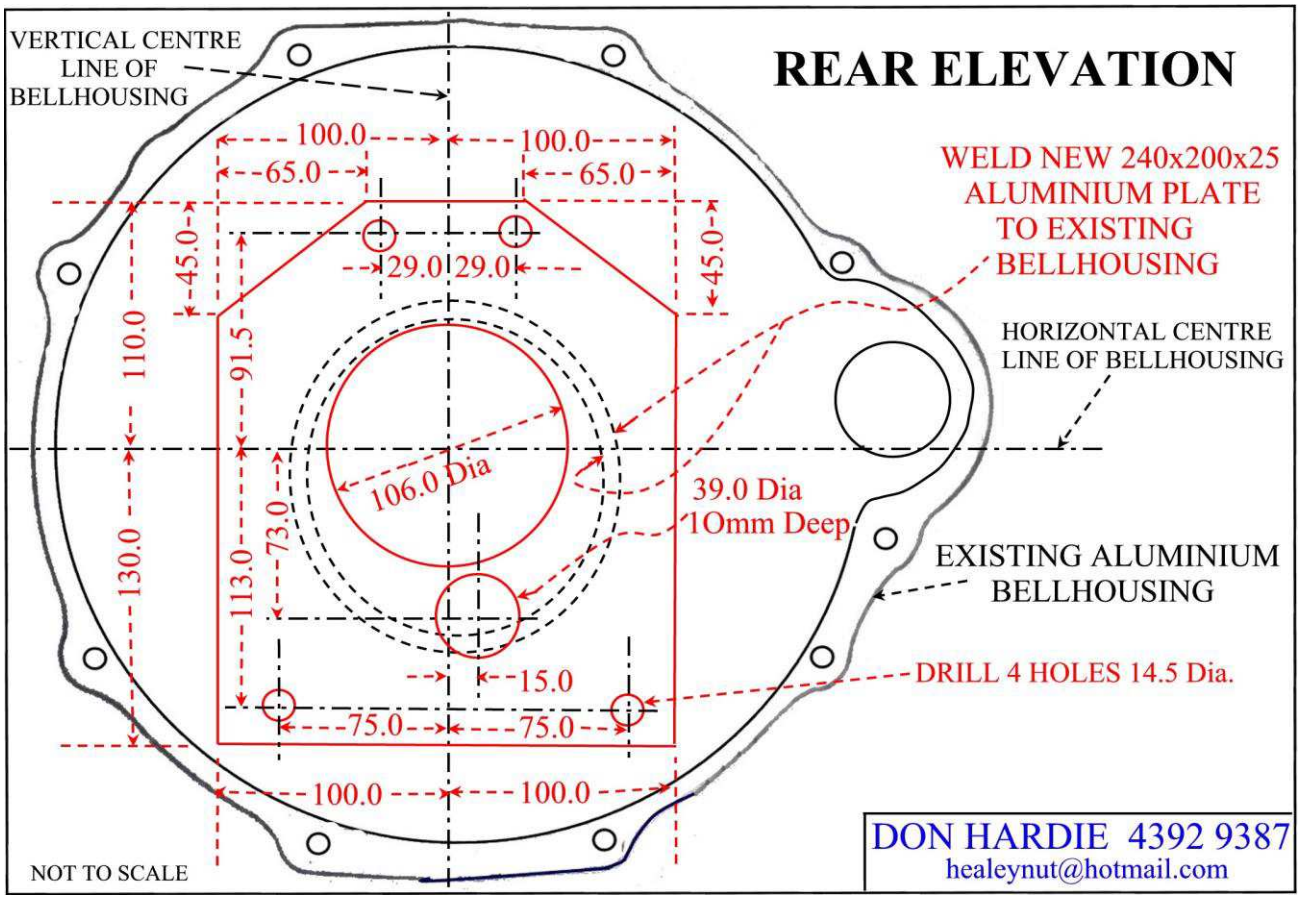
REAR ELEVATION
VERTICAL CENTRE LINE OF BELLHOUSING
WELD NEW 240x200x25 ALUMINIUM PLATE TO EXISTING BELLHOUSING
HORIZONTAL CENTRE LINE OF BELLHOUSING
EXISTING ALUMINIUM BELLHOUSING
DRILL 4 HOLES 14.5 Dia.
100.0
100.0
65.0
65.0
45.0
45.0
29.0
29.0
110.0
91.5
130.0
113.0
73.0
106.0 Dia
39.0 Dia
10mm Deep
15.0
75.0
75.0
100.0
100.0
NOT TO SCALE
DON HARDIE 4392 9387
healeynut@hotmail.com

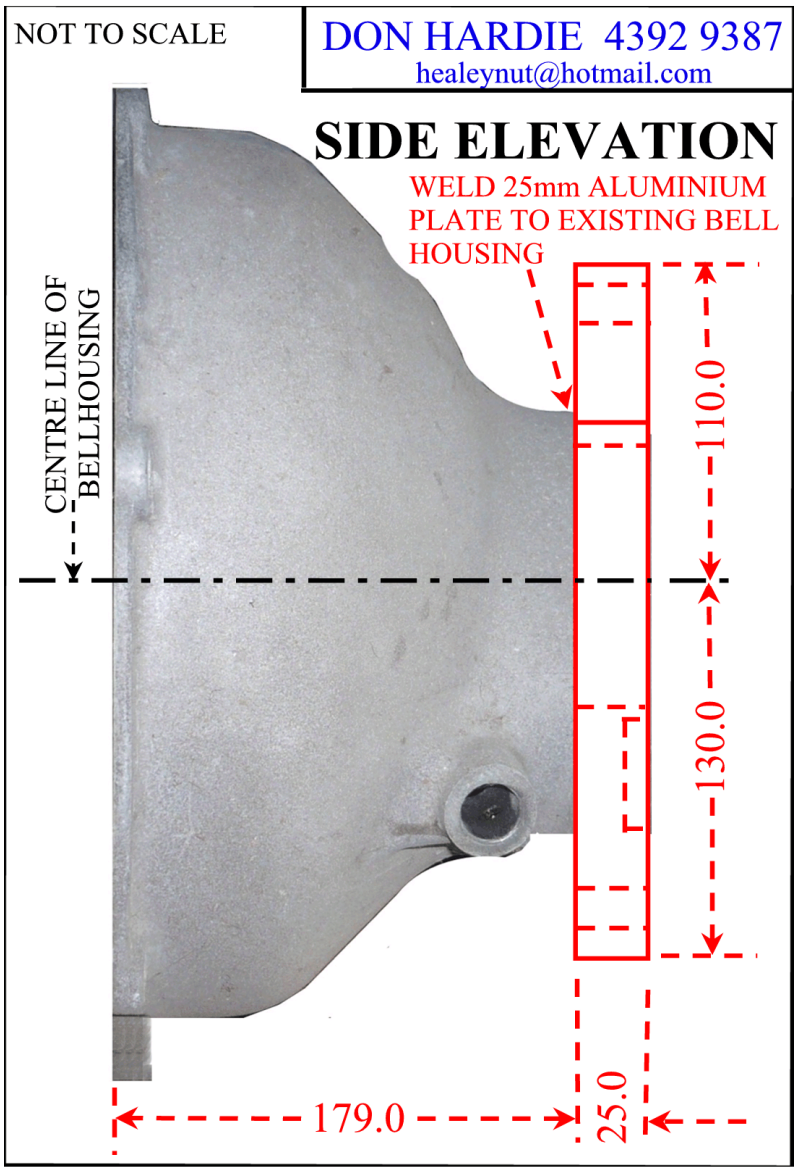
NOT TO SCALE
DON HARDIE 4392 9387
healeynut@hotmail.com
SIDE ELEVATION
WELD 25mm ALUMINIUM PLATE TO EXISTING BELL HOUSING
CENTRE LINE OF BELLHOUSING
110.0
130.0
179.0
25.0

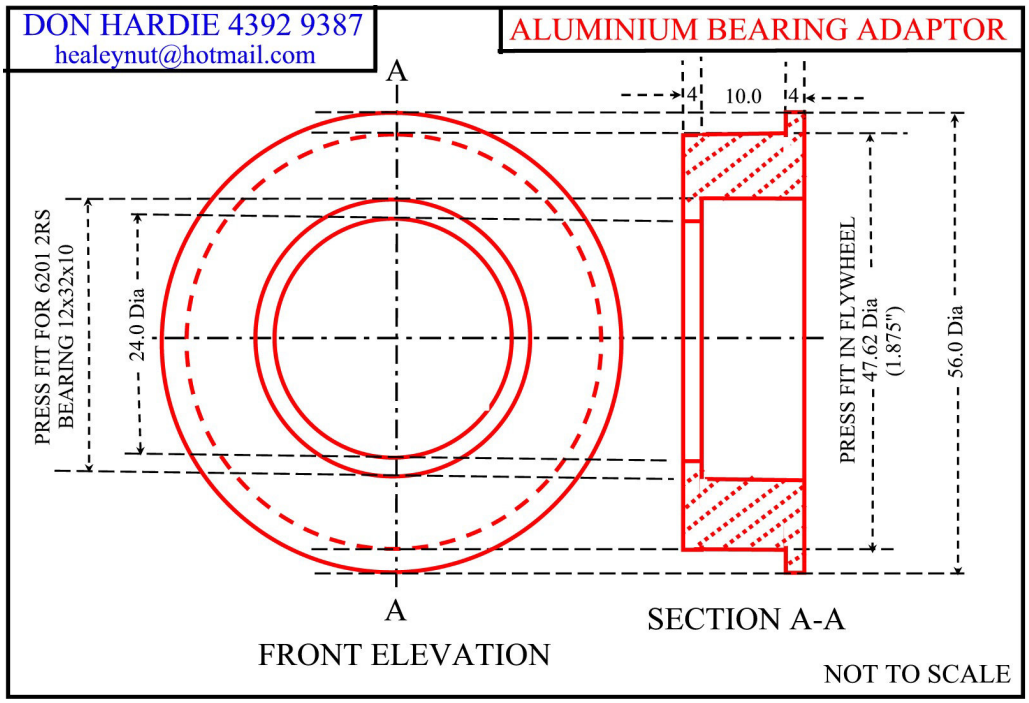
DON HARDIE 4392 9387
healeynut@hotmail.com
ALUMINIUM BEARING ADAPTOR
A
A
4
10.0
4
PRESS FIT FOR 6201 2RS BEARING 12x32x10
24.0 Dia
PRESS FIT IN FLYWHEEL
47.62 Dia
(1.875")
56.0 Dia
FRONT ELEVATION
SECTION A-A
NOT TO SCALE

Page 3 of 9

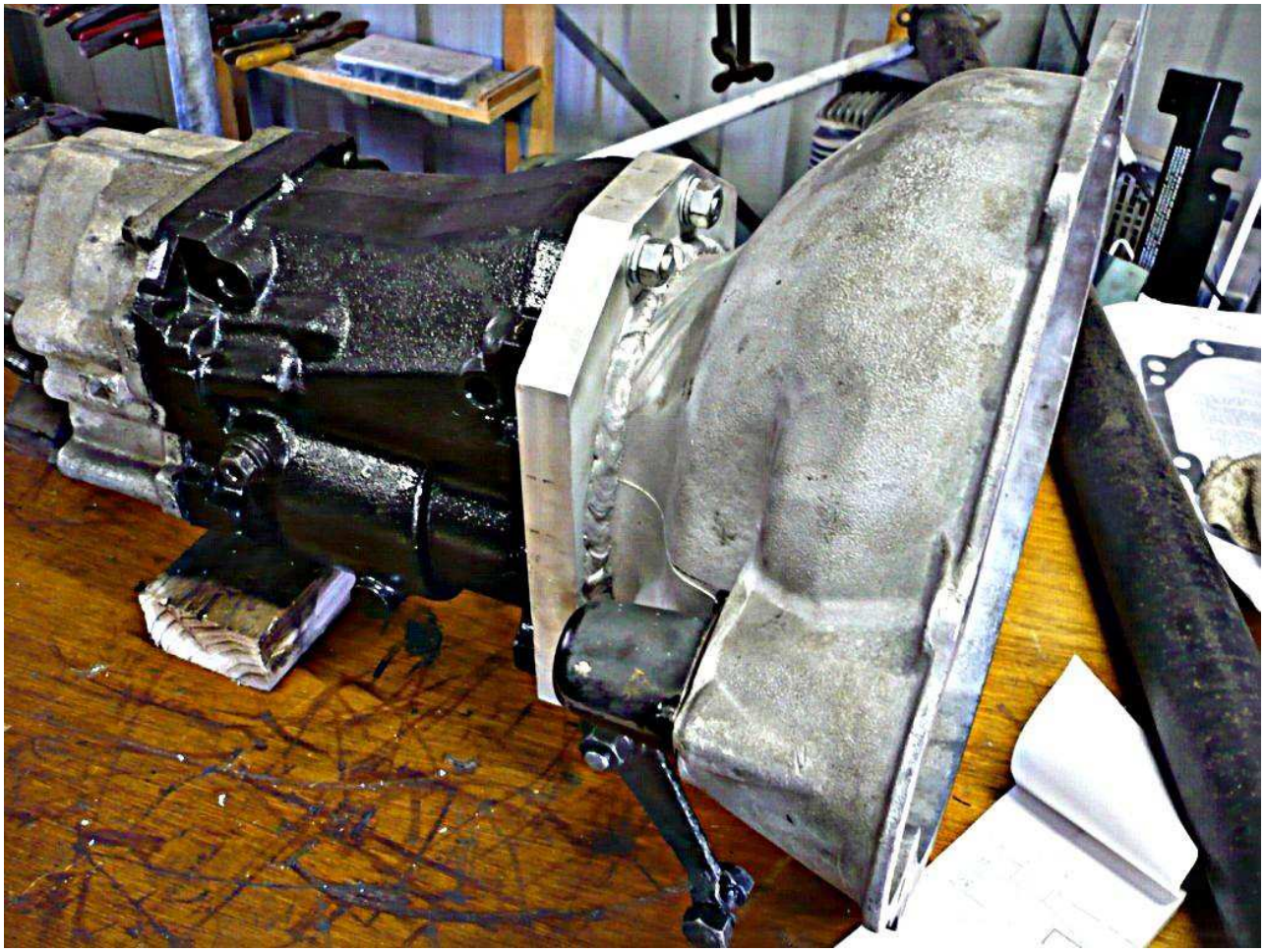

Changing shifter positions

Luckily there are many different shifter positions available for toyota boxes and most of them can be swapped over. Sometimes this just involves changing over the alloy shifter mount. But if you are going from quite far foward to one further back you will also need to swap over the shifter yoke also. This is easy. You remove the pin holding the yoke then you need to undo all the bolts around the tailcase. Then gently split the tail case from the sandwich plate. Don't dig in with a screw driver because you don't want to munch the alloy. Use something wide and flat like a chisel to pry it apart. Yes oil will go everywhere. Then the shaft with the yoke can be slid foward and the yoke removed.

Shifter measurements are taken from the front of the gearbox, (not bellhousing) back to the shifter hole.

Celica 18" 18" 19" and 20.5"

REAR GEARBOX CROSS MEMBER ALTERED FOR CELICA REAR MOUNT

FRONT UNDER SIDE OF REAR MOUNT

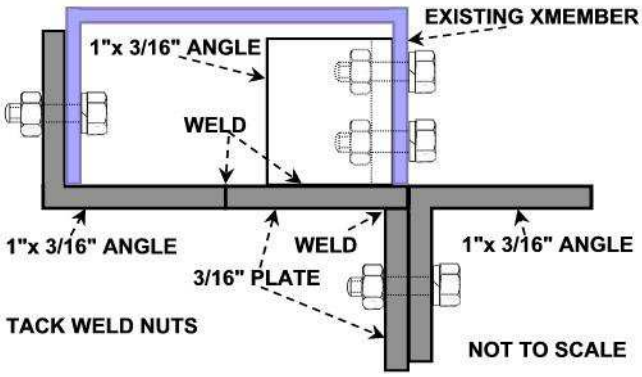

CROSS SECTION OF NEW MOUNT

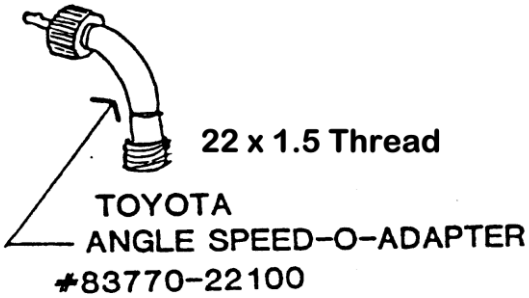

IT FITS

SPEEDO CABLE & RATIO BOX

The speedo drive on the Austin gearbox has a ratio of 3.5 turns of the output flange to 1 of the speedo drive whereas the Celica Box has a ratio of 2.5 to 1, so the speedo will show a speed about 0.714 slower than the actual speed and register the distance travelled about 0.714 less. You can send your speedo to a specialist who can recalibrate it or you can install a Ratio Box (0.714 input to 1.000 output) to increase the output revs to combat this now error.

Check your gearboxes to see if they are the same speedo drive ratios as above. If not you will need to recalculate the ratio required. A Toyota Angle Speed Adaptor and a straight through Ratio Box with the Toyota 22mm x1.5 pitch female input thread an a Smiths 3/4" x 26 TPI male output thread, which will connect to your existing speedo cable will finish the job. If you can't find the Angle Speed-o-Adapter the measurments are below.

22mm female1.5mm pitch
to 22mm male 1.5mm pitch
250mm long
Plus Toyota style inner ends

Threads
FEMALE
TOYOTA 22mm x 1.5mm Pitch
to MALE
SMITHS 3/4" x 26 TPI

FlexibleDrive

The control systems specialist

Home | Company | Products | Capabilities | Contacts

Contacts

- VIC
- TAS
- NSW
- QLD
- WA
- SA

Home

Contact Us

1300 36 37 35

Within Australia

New South Wales (Including ACT)

Unit 17
70 Holbeche Road
ARNDELL PARK NSW 2148

T: (02) 9621 2200
F: (02) 8814 9288
E: newsales@flexibledrive.com.au

State Manager - **Joshua Bewick**
M: 0423 023 289
E: jbewick@flexibledrive.com.au

National Sales Manager **Darren Bagatella**
M: 0417 100 145
E: dbagatella@flexibledrive.com.au

Hours Mon-Fri : 8:00am - 5:00pm

Map

How to find us (click to enlarge)

Get the latest news, sales and product information from Flexible Drive.

Subscribe

Click on a state to find your nearest location

Ratio Boxes / Drive Joints - 888 Series

Drive joints are used to correct inaccurate speedometer operation resulting from a change in a vehicle's axle ratio, and/or tyre size. Installing a drive joint of the proper ratio between the transmission and the flexible shaft alters the drive ratio to the speedometer to correspond to the vehicles alterations.

Method of Calculating Drive Joint Ratio

1 Check the Speedo reading against a GPS reading.
2 Drive ratio is Speedo reading divided by GPS reading.
3 Select the adaptor Box Kit from below and gears from Page 2
4 Don't worry if the Speedo reading increases instead of decreasing (or visa versa) just reverse the gears as shown at the bottom of Page 2.

Part No.	Adaptor Box Kit	Input End		Output end	
		Drive Shaft	Nut Int.	Driven End	Ext. Thd.
A888B	888B	Ø0.203 Key	7/8-18 UNS	Ø0.213 Hole	7/8-18 UNS
A888F	888F	Ø0.104 Square	7/8-18 UNS	0.105 SQ. Hole	7/8-18 UNS
A888TF	888TF	Ø0.203 Key	M22 X 1.5	Ø0.213 Hole	M22 X 1.5

888TF is the kit for Celica and Supra gearboxes. Comprising of 2 housings & couplings, 4 self tapping screws, 1 gasket, 1 input shaft, 1 output shaft, 1 drive key & 1 intermediate shaft. Gears are purchased separately.

A Toyota Angle Speed-O-Adaptor - Part No 83770-22100 a short flexible cable will be needed - try a Toyota Wrecker.

Also a Speedo cable (from the M22x1.5) to screw onto the Speedo (12mm x 1.0mm pitch ?).

FLEXIBLE DRIVE AGENCIES

888 SERIES GEAR RATIOS

Ratio	Gear A		Gear B		Gear C		Gear D		
0.4187	3816477	11	3816478	17	3816477	11	3816478	17	2.3884
0.4314	3816477	11	3816478	17	3816485	12	3816486	18	2.3182
0.4427	3816477	11	3816478	17	3816489	13	3816490	19	2.2587
0.4444	3816485	12	3816486	18	3816485	12	3816486	18	2.2500
0.4561	3816485	12	3816486	18	3816489	13	3816490	19	2.1923
0.4622	3816475	10	3816476	14	3816477	11	3816478	17	2.1636
0.4681	3816489	13	3816490	19	3816489	13	3816490	19	2.1361
0.4762	3816475	10	3816476	14	3816485	12	3816486	18	2.1000
0.4853	3816477	11	3816478	17	3816479	12	3816480	16	2.0606
0.4887	3816475	10	3816476	14	3816489	13	3816490	19	2.0462
0.5000	3816479	12	3816480	16	3816485	12	3816486	18	2.0000
0.5033	3816477	11	3816478	17	3816491	14	3816492	18	1.9870
0.5102	3816475	10	3816476	14	3816475	10	3816476	14	1.9600
0.5132	3816479	12	3816480	16	3816489	13	3816490	19	1.9487
0.5185	3816491	14	3816492	18	3816485	12	3816486	18	1.9286
0.5322	3816489	13	3816490	19	3816491	14	3816492	18	1.8791
0.5357	3816479	12	3816480	16	3816475	10	3816476	14	1.8667
0.5392	3816477	11	3816478	17	3816472	10	3816473	12	1.8545
0.5556	3816472	10	3816473	12	3816485	12	3816486	18	1.8000
0.5608	3816477	11	3816478	17	3816481	13	3816482	15	1.7832
0.5625	3816479	12	3816480	16	3816479	12	3816480	16	1.7778
0.5702	3816472	10	3816473	12	3816489	13	3816490	19	1.7538
0.5709	3816477	11	3816478	17	3816493	15	3816494	17	1.7515
0.5778	3816481	13	3816482	15	3816485	12	3816486	18	1.7308
0.5833	3816479	12	3816480	16	3816491	14	3816492	18	1.7143
0.5882	3816485	12	3816486	18	3816493	15	3816494	17	1.7000
0.5930	3816481	13	3816482	15	3816489	13	3816490	19	1.6864
0.5952	3816475	10	3816476	14	3816472	10	3816473	12	1.6800
0.6037	3816489	13	3816490	19	3816493	15	3816494	17	1.6564
0.6049	3816491	14	3816492	18	3816491	14	3816492	18	1.6531
0.6190	3816475	10	3816476	14	3816481	13	3816482	15	1.6154
0.6250	3816472	10	3816473	12	3816479	12	3816480	16	1.6000
0.6303	3816475	10	3816476	14	3816493	15	3816494	17	1.5867
0.6481	3816472	10	3816473	12	3816491	14	3816492	18	1.5429
0.6500	3816479	12	3816480	16	3816481	13	3816482	15	1.5385
0.6618	3816479	12	3816480	16	3816493	15	3816494	17	1.5111
0.6667	3816474	12	3816474	12	3816485	12	3816486	18	1.5000
0.6741	3816481	13	3816482	15	3816491	14	3816492	18	1.4835
0.6863	3816491	14	3816492	18	3816493	15	3816494	17	1.4571
0.6944	3816472	10	3816473	12	3816472	10	3816473	12	1.4400
	Gear D		Gear C		Gear B		Gear A		Ratio

Ratio	Gear A		Gear B		Gear C		Gear D		
0.7222	3816481	13	3816482	15	3816472	10	3816473	12	1.3846
0.7333	3816477	11	3816478	17	3816494	17	3816493	15	1.3636
0.7353	3816472	10	3816473	12	3816493	15	3816494	17	1.3600
0.7466	3816477	11	3816478	17	3816482	15	3816481	13	1.3394
0.7511	3816481	13	3816482	15	3816481	13	3816482	15	1.3314
0.7556	3816485	12	3816486	18	3816494	17	3816493	15	1.3235
0.7647	3816481	13	3816482	15	3816493	15	3816494	17	1.3077
0.7692	3816485	12	3816486	18	3816482	15	3816481	13	1.3000
0.7754	3816489	13	3816490	19	3816494	17	3816493	15	1.2896
0.7765	3816477	11	3816478	17	3816473	12	3816472	10	1.2879
0.7785	3816493	15	3816494	17	3816493	15	3816494	17	1.2844
0.7895	3816489	13	3816490	19	3816482	15	3816481	13	1.2667
0.8000	3816473	12	3816472	10	3816485	12	3816486	18	1.2500
0.8095	3816475	10	3816476	14	3816494	17	3816493	15	1.2353
0.8211	3816473	12	3816472	10	3816489	13	3816490	19	1.2179
0.8242	3816475	10	3816476	14	3816482	15	3816481	13	1.2133
0.8319	3816477	11	3816478	17	3816492	18	3816491	14	1.2020
0.8500	3816479	12	3816480	16	3816494	17	3816493	15	1.1765
0.8571	3816485	12	3816486	18	3816492	18	3816491	14	1.1667
0.8627	3816477	11	3816478	17	3816480	16	3816479	12	1.1591
0.8654	3816479	12	3816480	16	3816482	15	3816481	13	1.1556
0.8797	3816489	13	3816490	19	3816492	18	3816491	14	1.1368
0.8815	3816491	14	3816492	18	3816494	17	3816493	15	1.1345
0.8889	3816485	12	3816486	18	3816480	16	3816479	12	1.1250
0.8974	3816491	14	3816492	18	3816482	15	3816481	13	1.1143
0.9000	3816479	12	3816480	16	3816473	12	3816472	10	1.1111
0.9059	3816477	11	3816478	17	3816476	14	3816475	10	1.1039
0.9123	3816489	13	3816490	19	3816480	16	3816479	12	1.0962
0.9184	3816475	10	3816476	14	3816492	18	3816491	14	1.0889
0.9333	3816491	14	3816492	18	3816473	12	3816472	10	1.0714
0.9444	3816472	10	3816473	12	3816494	17	3816493	15	1.0588
0.9457	3816477	11	3816478	17	3816490	19	3816489	13	1.0574
0.9524	3816475	10	3816476	14	3816480	16	3816479	12	1.0500
0.9579	3816489	13	3816490	19	3816476	14	3816475	10	1.0440
0.9615	3816472	10	3816473	12	3816482	15	3816481	13	1.0400
0.9643	3816479	12	3816480	16	3816492	18	3816491	14	1.0370
0.9706	3816477	11	3816478	17	3816486	18	3816485	12	1.0303
0.9744	3816485	12	3816486	18	3816490	19	3816489	13	1.0263
0.9822	3816481	13	3816482	15	3816494	17	3816493	15	1.0181
1.0000	3816472	10	3816473	12	3816473	12	3816472	10	1.0000
	Gear D		Gear C		Gear B		Gear A		Ratio

Place gears A through D as illustrated.
Always be certain that gear A drives gear B and gear C drives gear D
For ratios 1.000 or less use top headings and read from left to right ABCD
For ratios 1.000 or more use bottom headings and read the right to left DCBA

$$\text{Ratio} = \frac{A}{B} X \frac{C}{D}$$

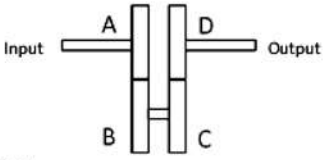

10 pairs of gears are required to make up all the ratios above. They are paired below

3816472	10T	3816474	12T	3816475	10T	3816477	11T	3816479	12T	3816481	13T	3816485	12T	3816489	13T	3816491	14T	3816493	15T
3816473	12T	3816474	12T	3816476	14T	3816478	17T	3816480	16T	3816482	15T	3816486	18T	3816490	19T	3816492	18T	3816494	17T

F525 / 2500215 888 RATIO BOX GEAR CHART (2014)

A TASMANIAN 100 SUPRA CONVERSION

John Rettig in Tasmania has fitted a Toyota W58 gearbox into his 100 using a bell housing made by Dellow in Sydney - http://dellowconversions.com.au – for $800au, it's not listed in their website, so contact Jeff Dellow: 02 9774 4419 | info@dellowconversions.com.au

"Hi Don, Can confirm the W58 supra box is just perfect I use all gears and 5th is the same as the Healey overdrive, very happy using the Dellow conversion. I ran the Historic Meeting here a few weeks ago and managed first place in regularity I did start to run out of brakes and will now explore disc brake conversion. Having lots of fun. Thank you for your help, have attached a picture. Regards John"

Don Hardie 21/12/2016

100 TECHNICAL

GEARBOX - SUPRA CONVERSION

Conversion Components Limited

Gearbox Conversion Specialists

Phone: +64 (7) 863-8509
Fax: +64 (7) 863-6354
17 Victoria Street, Waihi 3061, New Zealand
sales@conversioncomponents.co.nz

HEALEY 3000, 2700 to **SUPRA 5 Speed Gearbox Conversion**

Bell housing - cast aluminium complete with: -
Pilot bush & sleeve, dowels and bolts.
Clutch fork, (hydra) thrust bearing, carrier,
clips, and reco slave cylinder.
Clutch plate (conversion 9 ½"')
Speedo cable

Total Conversion Kit	**$ 2,070.00**
Gearbox **5 speed** SUPRA **(wide** ratio)	**$ 1,050.00**
TOTAL	**NZ $ 3,120.00**
Air freight & documentation	**$447.00**
Extra for close ratio gearbox	$ **300.00**
Engine plate, lightweight cast aluminium	$ **630.00**

Gearboxes are Ex Japan - 2-month return warranty, and are supplied complete with gearlever, slip yoke, rear rubber mount.

Conversion Kit can be supplied without Gearbox.
No warranty on gear tooth breakage.
Speedometer calibration - customers care.
Export: Europe/North America – 10/99

Last modified: November 18,1999

****

Don't forget that these are prices in NZ $.
This could be fitted to a Four, as BN2 & 100-6 gearboxes have been successfully fitted. Ask around to see what extra has to be done.

You will probably have to remove the rear gearbox mounting bracket from the chassis and fit a Kilmartin BN 2 one.

There is also Smitty's Transmission Conversion an American conversion (see Page 2), which has been imported by some club members. I have a copy of Smitty's Installation Instructions.

DON HARDIE.

100 TECHNICAL

HEALEY & SUPRA GEARBOX RATIOS

Austin Healey 100 BN1	Austin Healey 3000 Mk 111	Supra W55 WIDE (STANDARD)	Supra W59 EXTRA WIDE (RARE)	SUPRA W? CLOSE RATIO	Supra W? CLOSE RATIO (HIGH 5th)
	1st - 2.63:1	1st - 3.56:1	1st - 3.95:1	1st - 3.286:1	1st - 3.27:1
1st - 2.25:1	2nd - 2.071:1	2nd - 2.05:1	2nd - 2.14:1	2nd - 1.894:1	2nd - 1.96:1
2nd - 1.42:1	3rd - 1.306:1	3rd - 1.38:1	3rd - 1.38:1	3rd - 1.276:1	3rd - 1.31:1
3rd - 1.00:1	4th - 1.00:1	4th - 1.00:1	4th - 1.00:1	4th - 1.000:1	4th - 1.00:1
OD - 0.778	OD - 0.82	5th - 0.85:1	5th - 0.85:1	5th - 0.783:1	5th - 0.775:1

Toyota engines
22R 81-90 CARS & PICKUPS
22RE 84-94 CARS & PICKUPS
5MG 82-86 SUPRA
7MG 86- SUPRA (NON TURBO)
From SMITTY'S Inst.Instructions

This information was gleaned from Workshop Manuals, The Internet and Smitty's installation instructions.

DON HARDIE

To fit either of these conversions to a BN 1 you will probably have to cut out the rear gearbox mount cross member and weld in a BN 2 one (Kilmartins do one).

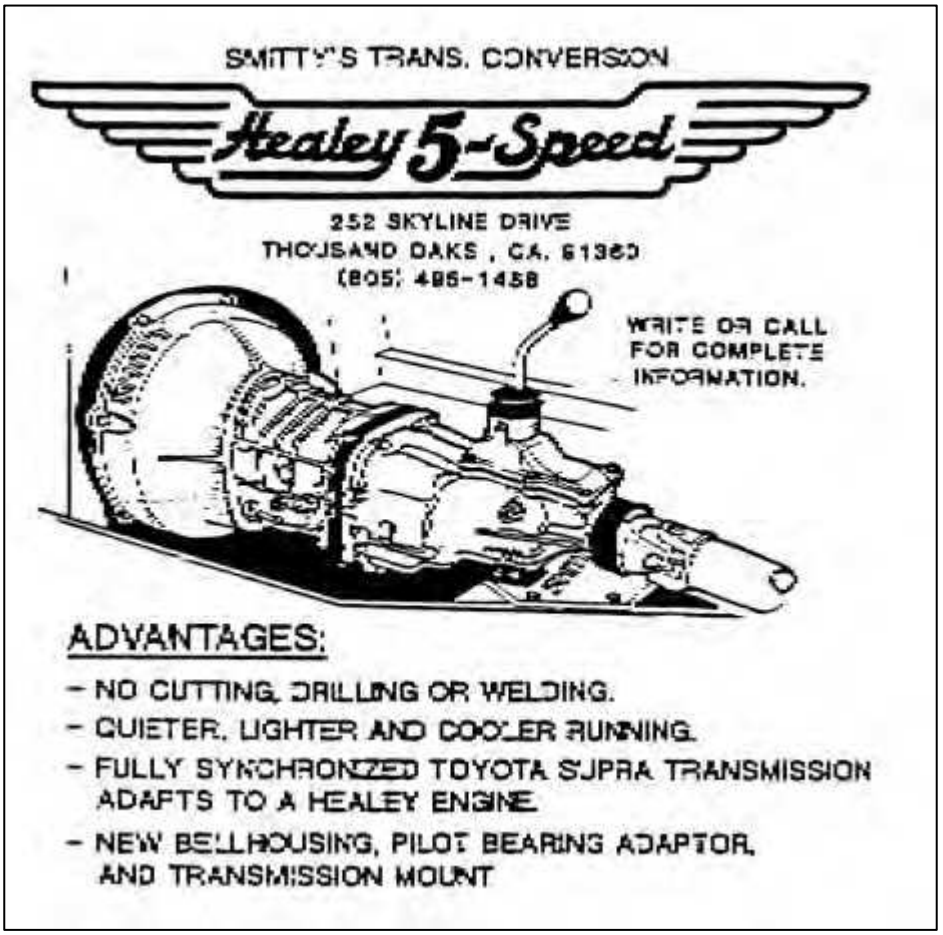

5 SPEED GEARBOX CONVERSION

(This is a severely edited article from Great Britain and may be of some interest. The full story lists the nuts and bolts conversion and I can supply it if anyone wants it - Ralph Boord.) If you are tired of overdrive problems, poor gear change, poor gear ratios, or even all three, then there is the option of converting to a 5-speed gearbox.
The Toyota conversion is available from a number of sources and in a number of forms, using used gearboxes. Known as the "W" range, the gearbox can be obtained with a number of Toyota vehicles, with different ratios. The best, and easiest to find in the UK, is the Supra 7M-G engine (non-turbo 1986-1992), which has the W58 gearbox. The box is also found in the two wheel drive pick-up trucks. The people specialising in this conversion are Smitty in California USA (fax +1 805 499 8933).

Gearbox Ratios	Healey BJ8	Supra W58	HiLuxW50	W55	W57
1st	2.637:1	3.285:1	3.287:1	3.566:1	3.258:1
2nd	2.071:1	1.894:1	2.043:1	2.056:1	1.894:1
3rd	1.306:1	1.275:1	1.394:1	1.384:1	1.275:1
4th	1.000:1	1.000:1	1.000:1	1.000:1	1.000:1
5th (OD)	0.802:1	0.783:1	0.853:1	0.850:1	0.860:1

Note: the Supra 5th gear is the equivalent of a 28% overdrive.

Smitty's Conversion

This conversion does not require any modification or drilling of the chassis. The conversion uses the
Healey engine back plate, flywheel, clutch pressure plate and clutch slave cylinder.
First, find a suitable gearbox from a scrap yard. In Leicester I found a yard specialising in Japanese cars and they had five Supras to choose from. They removed the required components from a 1990 model and charged me £120 for the lot.

The Verdict

At the time of writing I have now done 1200 miles including the Dawlish Weekend 2001. The gear change is excellent and the ratios well spaced. Selection of 1 st whilst still moving is useful. Second gear is higher, and for quick overtaking maneuvers is easily selected without burying the lever in the reverse gate. Fifth gear provides even better motorway cruising than OD 4th. With a 3.5 diff I am pulling about 27 mph/1,OOOrpm in 5th, i.e. over 80mph at 3,000 rpm. To look at, the modification is not obvious, only the shorter gear lever giving it away. The old transmission, prop-shaft, cover, and carpets are all in safe storage, and if I get a bout of originality, all can be put back in place without any trace of the car having been modified.

Lifted from Healey Howl April 2002 the magazine of the South Australian AHOC

5 Speed gearbox conversion for Big Healey

Options

If you are tired of overdrive problems, poor gear change, poor gear ratios, or even all three, then there is the option of converting to a 5-speed gearbox. As far as I am aware there are two options, the Getrag and the Toyota transmissions.

The getrag conversion is available fromCape International and uses a new BMW gearbox. The kit includes all the components required for the conversion, including if necessary, the centre change transmission cover and carpets. The gear lever is in the same location as the Healey centre change gearbox such that the outward appearance is the same as a standard car.

The Toyota conversion is available from a number of sources and in a number of forms, using used gearboxes. Known as the "W" range, the gearbox can be obtained with a number of Toyota vehicles, with different ratios. The best, and easiest to find in the UK, is the Supra 7M-G engine (non-turbo 1986-1992) which has the W58 gearbox. The box is also found in the two wheel drive pick-up trucks. The two people specialising in this conversion are Smitty in California USA (fax +1 805 499 8933) andConversion Components Ltd. . The latter was featured in a Revcounter article by Neil Munn in December 2000. Other Toyota transmission conversion specialists includeClassic Conversions andRealm Engineering , although neither do a specific kit for the Healey, yet!

Gearbox Ratios

	Healey BJ8	Getrag	Supra W58	Hi Lux W50	W55	W57
1 st	2.637:1	3.830:1	3.285:1	3.287:1	3.566:1	3.258:1
2 nd	2.071:1	2.200:1	1.894:1	2.043:1	2.056:1	1.894:1
3 rd	1.306:1	1.400:1	1.275:1	1.394:1	1.384:1	1.275:1
4 th	1.000:1	1.000:1	1.000:1	1.000:1	1.000:1	1.000:1
5 th (OD)	0.802:1	0.810:1	0.783:1	0.853:1	0.850:1	0.860:1

Note: the Supra 5th gear is the equivalent of a 28% overdrive.

Smitty Conversion

This conversion does not require any modification or drilling of the chassis. The conversion uses the Healey engine back plate, flywheel, clutch pressure plate and clutch slave cylinder.

First, find a suitable gearbox from a scrap yard. In Leicester I found a yard specialising in Japanese cars and they had five Supras to chose from. They removed the required components from a 1990 model and charged me £120 for the lot.

Installation

The Smitty kit comes complete with comprehensive instructions and parts listing. The installation

can be undertaken with the engine in situ, or as I did, with the engine out in conjunction with a rebuild.

The Smitty conversion kit includes the following:

- Bell housing.
- Rear gearbox mounting adapter and screws.
- Spigot bearing adapter.
- Speedometer cable.

From the scrap yard:

- Toyota W series gearbox complete with bell housing, clutch release arm and rubber gaiter.
- Front section of prop-shaft.
- Rear gearbox rubber mount.

From the Toyota agent:

- Clutch friction plate 31250-14160
- Spigot bearing 90363-12002
- Speedo cable adapter (90 degree bend) 83770-30070

Components for correct Healey location of gear lever, not easily obtainable in UK but Smitty will supply:

- Housing, shift lever 33521-35221
- Retainer Assembly (Shift Tower) 33570-35030

The kit from Smitty

The Supra donor bits, release bearing and friction plate should be renewed.

Shift Lever Modification

The amount of work required depends upon where you want the gear lever to be. The standard Supra gear lever arrangement will fit under a side change transmission tunnel but will protrude about where the ash tray is. Smitty recommends using an MGB rubber gaiter and chrome retaining ring with this arrangement. However, the W series box can be fitted with different shift towers that place the lever between 23" and 27.5" from the engine back plate. The former matches the Healey centre change box and comes from the pick up truck (I think!), the latter being the Supra. The tower and internal lever for the 23" location are available but UK Toyota agents that I contacted do not stock them; they are available in the US, and if requested Smitty will supply them.

These towers employ different means for retaining the gear lever. The Supra uses a 4 screw cover plate whilst the forward tower uses a bayonet fitting retaining bush. This is not available from Toyota, nor could I find one in a scrap yard. So, I drew one up, had it made in brass by a local machine shop and hand cut the bayonet fitting. Drawing to be added to this site soon.

In the Supra, the gear lever has an extension incorporating a metalastic bush. This is easily removed and the lever fettled and chrome plated.

Illustration of the two lever positions, standard Supra, top, and as Healey centre change bottom. Also lever with new brass retaining bush.

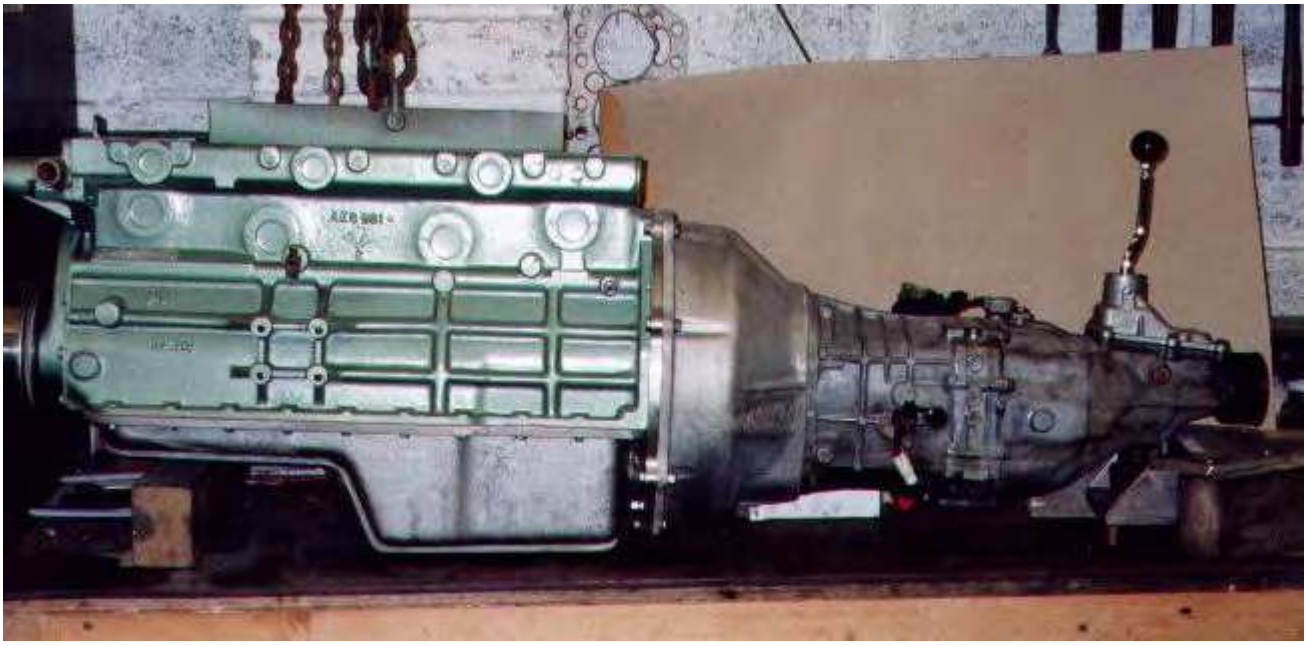

Toyota Supra box assembled with gear lever in forward position.

Spigot bearing

The standard bronze bush in the back of the crankshaft becomes redundant but, can be left in place. The Smitty kit includes an aluminium housing this is pressed into the centre of the fly wheel, and the Toyota bearing is pressed into the housing.


First motion shaft spigot bearing.

Rear engine mount

Smitty provides an aluminum casting that picks up the existing holes in the chassis and takes the Toyota rubber mounting.

Prop shaft

A new prop shaft has to be made up utilising the front splined section obtained from the donor car. There are several specialist companies building prop shafts and they should carry the remaining UJs and rear flange for the Healey differential. Mine cost less than a new shaft from any of the Healey suppliers. The length should be measured from the car with 20mm of forward movement left on the spline section. Mine measured 505mm between diff' flange and from UJ centre line.

Speedo cable & calibration

A new speedo cable will have to be made up or included in the supply from Smitty. It is possible to connect the cable direct to the gearbox but, this will require a tight bend that will shorten it's life. Toyota supply a 90 degree adapter for this purpose, see part number above. I sent this adapter to Speedograph at Nottingham so that they would get the correct end when making up the cable.

A big surprise was that the speedo calibration is exactly the same as for the side change Healey box. This I checked by jacking up one rear wheel and counting the number of turns on the cable for 20 turns of the back wheel (standard method used by Speedograph)

Transmission cover

The Toyota lever is shorter than the Healey lever, and the pivot point is lower. For it to look right, and not to restrict the movement at the point where it emerges from the cover, I had to cut about 35mm out, lower the top and re-fibre glass it as shown:


Cutting a new transmission cover to reduce the height, prior to fibre glassing.

Austin Healey 100:

A comment from Michael Oritt who has carried out the conversion on a BN1.

As you may be aware, the BN1 gearbox cover is quite small and is NOT a good candidate for reuse after fitting the Toyota box. I recently completed the installation of a Moss fiberglass 6-cylinder side-shift tunnel in my car and it was a very good fit, although I did wind up fabricating a new Extension Panel (the removable section of the firewall) to allow for proper access to the clutch slave cylinder. The fiberglass tunnel is long enough to permit one to dispense with the short intermediate tunnel that was peculiar to the BN1's and there is still room to mount the ashtray between the shifter and the armrest.

I recommend to anyone considering this conversion to consider using this cover buying one of these covers rather than patching the inevitable holes in the original, which will nevertheless be a mediocre fit at best.

Clutch hydraulics

The Toyota release arm does not use a clevis pin for connection to the slave cylinder push rod. Instead, it just has a recess and the push rod (supplied by Smitty) is trapped between it and the slave cylinder. The alignment of this was not very good as the slave cylinder is mounted too far away from the transmission centre line, apparently to cater for different donor cars. I decided to make up a sleeve to go over the release arm with a pinch screw to locate the recess and drillings to take a clevis pin and standard Healey push rod. The next problem was that now effectively being a longer arm, the clutch would not disengage until the very end of pedal travel. A BJ8 brake master cylinder was substituted (7/8" up from 5/8") but this made the pedal too heavy. Finally, a 3/4" master cylinder provided the correct feel and travel.



Release arm adapter sleeve.

Final Assembly

With gear lever removed, the engine (minus cylinder head) and transmission went in in one piece, see below.

The new transmission tunnel required a new BJ7 bulkhead adapter plate and new BJ7 infill sections to each side. Being a bit lower in height than a standard centre change, and because off the peg carpets never fit very well, the carpeting is being made to fit.

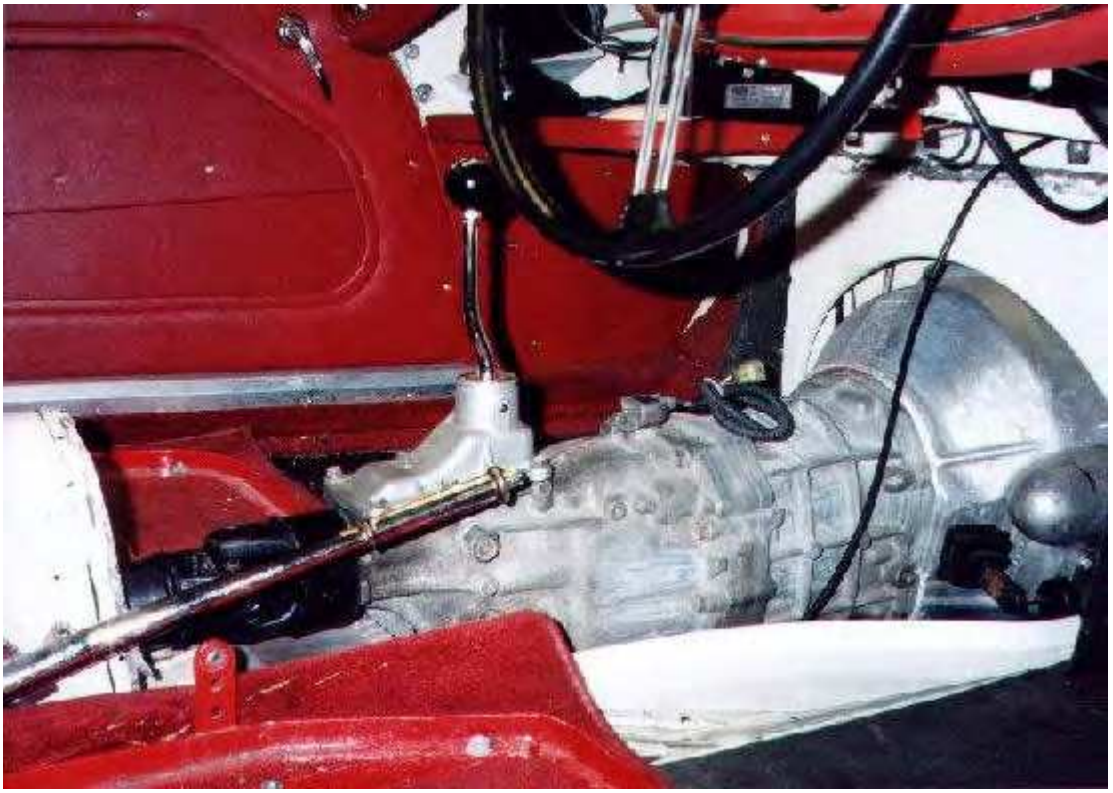

The Verdict

The gear change is excellent and the ratios well spaced. Selection of 1st whilst still moving is useful. Second gear is higher, and for quick overtaking maneuvers is easily selected without burying the lever in the reverse gate. Fifth gear provides even better motorway cruising than OD 4th. With a 3.5 diff' I am pulling about 27 mph/1000rpm in 5th, i.e over 80mph at 3000 rpm. To look at, the modification is not obvious, only the shorter gear lever giving it away.

Now covered 5,000 miles as of January 2003.

The old transmission, prop-shaft, cover, and carpets are all in safe storage, and if I get a bout of originality, all can be put back in place without any trace of the car having been modified.

SMITTY 5-SPEED INSTALLATION NOTES -- updated 11/4/04
BN6 - STEVE GEROW
BT7 - ROBERT BARBACK

These are notes on the installation of the Smitty 5-speed Toyota kit on my 59 BN6 with 29D engine and 10" coil spring clutch. Some suppliers in the Los Angeles area are included for convenience. These notes are being posted so they'll be in the archive for future use.

I had posted questions and received much useful off-list information regarding this conversion. Thanks to Robert Barback, Dean Caccavo and Jim LeBlanc as well as several others. Vive La Liste!

Robert Barback's notes on his BT7 installation follow mine.

Smitty Kit:
The Smitty kit is a well-made and engineered product for a reasonable price. None of the following comments are intended to disparage this product or Smitty, but rather to get more information out there for future use. Posters in this list have said they'd put one of the kits on in a weekend. Mine was more of a fiddle and Smitty cautions that these cars tend to be different and each install is a process. Smitty 805-495-1488.

Smitty's manual is comprehensive and is said to be available ahead of time if you are interested in purchasing the kit (I haven't verified that). The manual supplies all the needed Toyota part numbers with plenty of drawings.

Retaining Engine Position for easy reinstallation:
With the transmission removed the engine mounts are not too far off from the balance point of the engine. Therefore it is possible to hold the engine in the proper position with a carefully measured block of wood between the valve cover and the firewall. The pressure from the engine tilting is not enough to cause any significant flex in the firewall. Be careful!

I bought the $69 Transmission Jack from Harbor Frieght and used it in combo with my floor jack and an overhead cable hoist ("comealong"). I used the floor jack to move the engine up and down with a 2x4 under the back of the pan (non-concours pan--lotsa dings). I used the comealong hanging from the garage rafters to lift the tail end of the Healey and Toyota transes up via a fan belt looped under the back of each trans. Having the two jacks was more important than the comealong. The transmission jack accurately holds and supports the trans and allows it to roll forward and backward. Many people say this is fairly easy to do with just a floor jack.

Transmission:
The Toyota transmissions come with the shift tower in 3 positions--front, middle and back. Mine is the front tower and I surely wouldn't want the shift lever any further back than that, although Smitty says you can use all 3--he also says front is best. The others require bending the shift lever forward then up. Center-shifters are different.

I got my transmission from Foreign Auto Salvage in North Hollywood CA for $300. Upon disassembly, found chipped gears and at least 2 tablespoons of coarse metal chips in the inside. Foreign Auto instantly replaced it with no hassle. The second trans appears to be from a Toyota Sedan, because it came with a long, chrome shift lever with a fake leather ball on the end. The trucks tend to have black shift levers. I took it apart and it was perfect on the inside. Put a gasket set in it. Smitty's manual doesn't mention this, but the gasket set comes with front & rear seals included, which I'd purchased separately.

In the junkyard you may want to check out the 5th gear ratio by putting a mark on the input shaft and seeing how far the output turns. I didn't do this until I had the trans installed in the car--unfortunately it seems mine has an 18% overdrive--most are supposed to be 22%. Oh well.

Suggest retorquing the main case bolts till they feel snug. Mine felt like they might be starting to strip at 40 lb-ft and the Chilton Toyota Truck manual says to use 53. Likewise the front nose cover said 27 and 19 or 20 feels more like it. Most guys ignore or don't know these figures and just torque till they feel snug.

Toyota uses a splined yoke which slides in and out of the rear of the trans--this instead of the splined 2-piece shaft from the Healey. Smitty says to get the yoke from the junk yard. I did this, but the one I got had a non-removable u-joint in it. Which brings me to the driveshaft fabrication.

Driveshaft:
The going rate for these driveshafts seems to be about $200. Mine was fabricated by Driveshaft Specialist in Irwindale CA (626) 334-2418. He quoted me $135 to fab it cannibalizing the flange off my Healey shaft. He actually built it fresh in 2 days using an aftermarket Toyota sliding yoke for $115 total, leaving my Healey shaft intact. Wow! He told me that since Toyota makes (or made) some of their trucks in the US, US-made yokes are available at large savings over the original part. Smitty's manual describes how to measure for the driveshaft needed.

Clutch:
Likewise, another lister emailed me who had had a custom clutch disc made by a clutch specialist. I did not do this, as I'd already special-ordered a remanufactured disc from Toyota for $73 and could not return it. He said you can have a custom disc made for half this, though I didn't check. I've had a recommendation of Valley Clutch Co also in Irwindale CA at (626)962-8787. This fellow said his Toyota disc was the same thickness as the minimum thickness specified for the Healey clutch. I was not able to find a spec for disc thickness for the Healey either in Haynes or in the Official manual. My Healey disc appeared to be nearly new and the Toyota disc was maybe 20 thousanths thicker. I did not experience any interference or rivet problems with my BN6 clutch, as Robert did with his BT7.

Thicker clutch disc would give more clearance:
It occurs to me that if the assembled clutch cover is too thick from the engine to the T/O plate and the T/0 bearing is riding on the clutch all the time, then you could have a thicker clutch disc fabricated which would move the levers and clutch T/O plate down toward the flywheel, giving clearance in front of the T/O bearing. I would seek guidance from the clutch fabricator on this issue before going ahead with it. It also occurs you could make a telescoping adjustable slave pushrod out of a piece of steel tubing, jam nuts and a 1/4-20 screw.

Addendum 11/4/04: Smitty now sells a thicker Toyota clutch disc.

Rebuilding the clutch slave cylinder:
My clutch slave cylinder needed an overhaul. One lister suggested leaving the cylinder hanging under the car and letting it bleed by gravity into a pan. I used a turkey baster to remove all the old brake fluid from the reservoir and filled it up again with new Castrol LMA. I allowed about 1/2 the reservoir to drain out through the bleed screw and all the bubbles were gone.

Slave Cylinder and clutch pushrod:
Two emailers said they'd had to use a different Toyota T/O bearing because the original was not extending far enough forward to fully depress the clutch. Rather than do this I shimmed the ball stud with approximately 3/16" of washers. Moving the ball stud forward moves the lever rest position near the front of the opening which is most desirable for guaranteeing the clutch will disengage. The slave cylinder can then

operate it with maximum travel. Adjusting the length of the pushrod may be necessary in order to proplerly bottom the slave piston. I used a 16d nail as a practice pushrod to experiment with lengths. In my case the Smitty-supplied pushrod worked fine.

First test of clutch disengagement:
Jim LeBlanc suggested cranking the engine with the starter motor and pushing on the clutch pedal while feeling with a finger to see if the tailshaft stops rotating.

At this point if it's not disengaging properly, you might need to experiment with a longer pushrod. Push the pushrod all the way into the slave cylinder until it bottoms out to see if a significant gap appears between the pushrod and the clutch lever. If you've got a lot of space there--like 1/2" instead of 1/8"--make an equivalently longer temporary pushrod out of a heavy nail and try it out. Pushrods come in and out of the slave cyl in just a moment.

A Note: After removing the seats, removing the transmission tunnel covers was easy. This is the only way I can see to get to the upper bolt on the clutch slave cylinder. Getting the seats and tunnel covers out of there is about 1/2 hr's work and well worth it. (Reinstalling the seats takes a lot longer if you don't jack the car up on stands.)

Keep track of which holes the dowel bolts come out of in the engine flange. They are the ones with the little groove between the threads and the plain shank.

Toyota pilot bearing:
Toyota uses a ball pilot bearing which is a very accurate fit on the end of the pilot shaft. I had to sand my pilot shaft down slightly with wet/dry paper to get the bearing to be other than a force fit. You need a sliding fit for installation of the trans in the car.

Pilot Tool adjustment:
I believe it is necessary, or desirable at least, to tighten up the accuracy of the supplied plastic pilot tool to make sure the nose of the first-motion shaft will slide into the Toyota pilot bearing during installation of the trans. I wrapped the pilot tool with enough electrical tape so it was a perfect fit on both the pilot bearing and the clutch disc splines. 1 layer of tape around the contour of the splines did the trick. Smitty supplies an aluminum ring which holds the Toyota pilot bearing into the Healey flywheel. I used a vise to press the bearing into the ring, and a large 1-5/16 socket as a tool to hammer this into the recess in the flywheel. This was easy if you're careful. Your lead hammer makes a dandy driver for this.

Bell Housing - wrench interference:
Before installation verify there's enough room for your socket wrench to clear the bolt heads on the Smitty bell housing. I used a deep 9/16 3/8-drive Craftsman because of its thin walls, but had to relieve a couple of places around the bolt heads.

Addendum per Earl Kagna 11/4/04: without the trans, test fit the bellhousing, TO bearing, clutch fork and slave cylinder so you can visually check the operation and clearance between the TO and clutch levers. You may need to adjust the position of the ball stud and/or slave pushrod length.

Toyota Trans install:
The shop manuals warn against tilting the engine into the radiator. Mine has the 6-bladed fan about 1/2" back from the radiator and during this process it never came close to the radiator. If you have the block between the valve cover and the firewall, minor or no jacking of the engine should be necessary in order to get the Toyota trans in place. Position your trans jack or floor jack in the middle of the hole and place the Toyota trans on top of it. Lower enough to get the bell housing through the opening, then raise it back up to

where the bolt holes align. Observe parallelism between the bell housing and engine flange. I believe the limiting factor here is the alignment of the Toyota pilot shaft with the pilot bearing--I believe this is at least as accurate as anything to do with the dowel bolts.

Throttle linkage interference:
If you have to jack the engine, be careful of the throttle linkage from the firewall to the manifold--on my BN6 this seemed to be more of a factor than hitting the radiator with the fan.

Trans tunnel & shift lever:
With the forward shift tower, the shift lever is approximately 3" in front of the ash tray. Having driven the car this way, I would strongly advocate using the forward shift tower, even if it means converting the trans (easy-Smitty shows which parts are necessary). I used the Toyota stub shift lever and it's only about 6" tall so rechroming it was unnecessary as my non-original leather shift boot goes all the way up to the ball.

Shift ball:
Threaded Black balls are available at bigger hardware stores. A gunsmith friend suggested having a trophy engraver engrave the 5-speed shift pattern on the ball, then fill it with white paint. I didn't explore this yet.

Addendum 11/4/04--Mid-60s Fiat 124 Spider has round black ball with 5-speed pattern--not identical to Healey ball as it has the numbers but no "H" pattern lines. No longer made & hard to find.

Robert Barback's Notes:

Smitty Transmission Info For BJ8 Revised For BT7

Transmission Model W55 5 Speed 89-91

Speedometer teeth 26- 31 teeth use the toyota gearing and recailabrate speedometer

Drive shaft Napa

Install either the dennis walsh AH 950 or the Moss rear seal kit on the your engine if you have not one already It is not really hard and they do work. Although the oil is leaking from the rear of the cam and not the only crank when you replace the gasket or perma-tex the plate you will stop the leak coming from the cam which is about 60% of the oil you see on the ground.

We had a Clutch 9 3/8 inches made by local clutch shop , (same size as toyota clutch disc) watch Toyota clutches because rivets poke out the wrong way and will hit flywheel if inside cut out on flywheel is less than 5 3\4 inches. Early BT7 had 5 π inch cut outs and the rivets hit causing the clutch to rub on flywheel.

By going to the local builder we got a clutch for about 50% of what Toyota wanted for a Clutch disc even with a discount. We found this out after buying the toyota disc. We decided to build the clutch with the rivets clearing the flywheel because we did not want to cut on the flywheel in case we wanted to go back original , however trimming the flywheel will not affect going back original Because the healey disc misses this area by about a π inch however I was not sure of the spacing when I made the decision. So I went conservative. A 9 ≤ inch disc will fit if you can get one , we could not find one....

Since the Late BJ7 's and the BJ8 have a different flywheel cut out and bolt pattern the Pressure plate is different, (they do not interchange) it makes the release on the clutch disc different , we had to have the spring tension on the springs in the pressure plate changed the changed springs to a stronger type with out

the change the clutch will slip in higher gears as the car warns up this is because the clutch disc is not being held with enough pressure. We used a pressure plate with less than 2000 miles on it from new , it worked ok with the orginal healey disc(new) however it slipped with the toyota disc. We measured a worn healey disc (it was slipping) with the new clutch disc from Toyota the Toyota disc was only .006 thicker.

If the W55 Transmission is used the Ash tray can remain , the hole is cut in the transmission cover front of the ash tray . I have not checked on the center shift healey where the shifter comes through. On the W 55 transmission the shifter is the most forward of all the Truck transmissions. So you don't have to remove the ash tray.

Replace the bolts smitty gives you that holds the rear mount on with allen head cap bolts otherwise it is a pain to get the wrench in between the frame and the mount. remember they are metric bolts.

Bring the measurements to your local NAPA Store they make a real nice drive shaft and can supply all the needed parts . It really makes the car ride much smoother it is surprising how much imbalance the old driveshafts had in them even if you took care of them.

Use the speedometer gear already in the toyota transmission , and recalibrate the speedometer , otherwise you may have problems with the nylon drive gear not meshing with the steel drive gear in the transmission. They work for a while but fail after a few hundred miles and the transmission must be removed and disassembled to replace the clip. There is no way of telling because the teeth are so close to matching everything works untill they wear and it fails. MOMA does a great job on the speedometers about $ 100 for cleaning and recalibrate.

The slave cyld. is moved on the toyota transmission from the Healey transmission , you lose the clearance between the transmission and the chassis , you can't bleed the hydrolic lines with the transmission cover in place. We had to add an extenstion line on to the bleeder and run it into the engine compartment to be able to bleed the air out.

NAPA has the 20 in brake lines in stock however you must change to 2 long fittings and not the 1 long and one short as the replacement line comes with. 3/16 couplers fit the line and the bleeder

100 TECHNICAL
GENERATOR FAULT TRACING & GENERATOR REGULATOR

A car that won't start in the morning, the need to keep on using a trickle charger overnight, or even the time when you have to be rescued with jump leads or a spare battery — all these things point to an ageing and tired power source. But, to quote the words of the old song, 'It ain't necessarily so!' The villain could just as easily be the dynamo or something else in the charging circuit. But what? How to track down the culprit is what this article is all about.

There are all sorts of short cuts and checks to discover what's wrong, but there's also an established test procedure, advocated by Lucas, and they of all people ought to know. Eliminating the battery from your enquiries is the first step and what you don't do is go out and waste money on buying a new one. The first test you can make is simply using an hydrometer to measure the specific gravity (SG) of the battery electrolyte.

Generally, in this country, we use a mean temperature of 60 deg. F. as a datum and, because SG is affected by the ambient temperature at which it is measured, adjust it up or down from there. At 60 deg. F (15 deg. C) a fully charged battery should produce a hydrometer reading of between 1.270 and 1.290. Around three quarters charged, the reading should be between 1.230 and 1.250 and with a totally discharged battery, the figures will be 1.110 to 1.130. In winter, with the temperature around 10 deg. F lower (50 deg. F.), reduce the figure by 0.004. In summer, for every 10 deg. F above 60 deg. F., add 0.004.

Carry out hydrometer test readings on every cell and they should all be around the same level. If they vary by more than 0.040 between highest and lowest, the battery is probably ailing.

Don't take hydrometer readings immediately after topping up the electrolyte level; they could be distorted. Take the car out for a run first, so that gassing mixes it up thoroughly; then do your measuring.

Another check that's advisable before even contemplating a new battery is a heavy discharge test, and for this you'll have to see your local garage or auto-electrician. As a result, you'll know for certain.

The next test is obvious and very simple — fanbelt tension. You don't always get the charging light showing, and a slipping belt doesn't always show up as that familiar shriek from the front end. A slight, persistent, sneaky, underhand, loss of grip can sap your battery without your knowledge quite easily. A deflection of about ½in. in the centre of the longest stretch of belt between two pulleys is about right. Look also at the condition of the belt; any signs of cracking or other damage and you'll need a new one.

Transfer your attention briefly to the dynamo itself and check the two connections, to make sure they are both clean and firmly in place. Also clean and check all the connections to the control box.

Dynamo Check

For this and for a number of subsequent checks you'll need to use a good moving coil voltmeter (0-20V). Leaving the unit in the car, disconnect the two leads and use some cable to bridge the two terminals. Then with the voltmeter between the bridged terminals and earth (Diag. 1), start the engine and gradually increase the engine speed, while watching the dial. A reading of 12V should be achieved quite easily without racing the engine and in no circumstances allow it to rise above 20V.

If the reading fails to build up as engine

Broken, dirty, or oil soaked connections can cause problems so checking and cleaning these is one of the early stages. Look at those on the control box as well.

Dynamo problems quite often come down to fitting new brushes. You may be able to inspect them in situ, but you'll need to take the dynamo off to change the brushes.

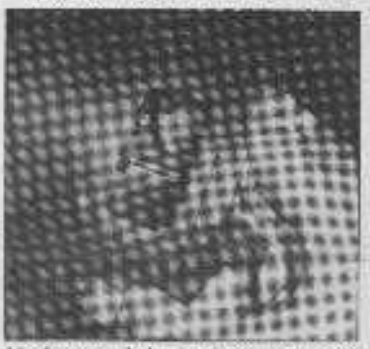

It's always worth cleaning the commutator with a petrol-soaked rag. If the commutator is scored, get it skimmed and the segments recut by an auto-electrician.

Joss Joselyn offers clear guidance on checking your dynamo/control box charging system.

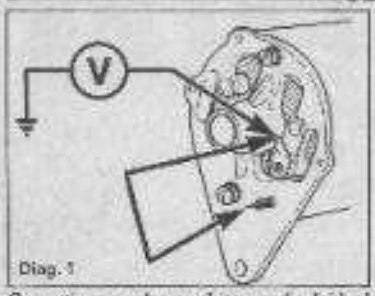

Connecting a voltmeter between the bridged dynamo terminals and earth can tell you quite a lot about the state of the dynamo itself.

speed increases, there's something wrong. No voltage at all would point to a faulty armature, an unsound brushbox and terminal insulation, or faulty brushes. A reading that doesn't climb past 2-5V would indicate a break in the field coils or faulty connections.

If the dynamo is faulty, it is possible to fit new brushes and clean up the commutator. This can even be skimmed on a lathe and the segment dividers recut (something for your local auto-electrician). If a new armature is necessary or there are problems with the field coils, it's generally better to get an exchange unit.

Control Box Check

This is not something that everyone feels competent to tackle, but if you do want to have a go, we would mention that first you will need a moving coil ammeter (5-0-40A) in addition to the voltmeter. Note, also, that we tackled this subject in some detail in last month's issue. If our charge circuit check is to be complete, however, we must include it again here.

There are two main types of control box — two-bobbin and three-bobbin. In the first the functions are voltage regulator and cut-out and in the second, voltage regulator, current regulator and cut-out. Those are the three functions that can be checked.

Voltage Regulator Check

This is the left hand bobbin on both types of control box. Connect the voltmeter as shown in Diag. 2, and run the engine at about 3,000 rpm. Readings should be:-

16.0-16.5V for an RB106 (two-bobbin).
15.0-15.5V for an RB310 (three-bobbin).
14.5-15.5V for RB340 (three-bobbin).

If you don't get these figures, adjust the screw and locknut on top of the bobbin. A clearance of 0.018in. should produce the right voltage which can be re-checked on the voltmeter.

If this doesn't do the trick, try the effect of a jump lead between the E (earth) terminal and a good clean earth point. If this clears the trouble, clean or make a new control box earth connection. If it doesn't, you need a new control box.

Cut-out Check

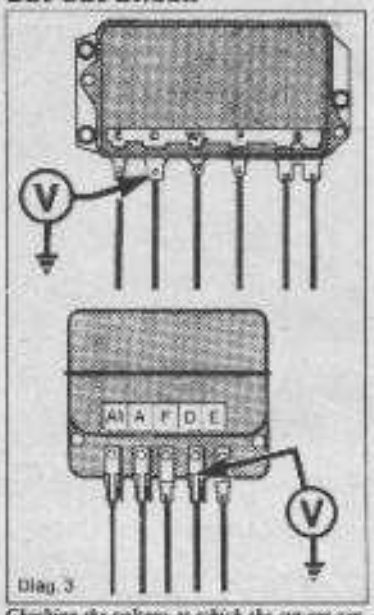

Checking the voltage at which the cut-out contacts close.

This checks the voltage at which the cut-out contacts close. Connect the voltmeter between the D terminal and a good earth (Diag. 3) and switch on an electrical load (headlights or rear screen heater). Start the engine, increase speed slowly and watch the voltmeter reading. When the contacts close, the voltmeter needle should flick back between 12.7 and 13.3V. If the reading is unsatisfactory, switch off the engine and adjust the gap. Officially this should be either 0.030 or 0.040in. according to type, but if points contact is made when the armature is halfway down on the bobbin, that's about right. If adjustment doesn't achieve the right figure, a new box is required.

Current Regulator Check

This is the centre bobbin on the three-bobbin type of control box. To make the check, the dynamo must produce maximum output irrespective of the state of charge of the battery, and this means putting the voltage regulator out of action by clamping the contacts together; a small crocodile clip will do. The ammeter is connected between the linked 'B' leads and the 'B' terminal on the box (Diag. 4), and the engine run at 3,000 rpm with the headlamps switched on. The dynamo's rated output should be shown on the ammeter (pick yours out of the table below).

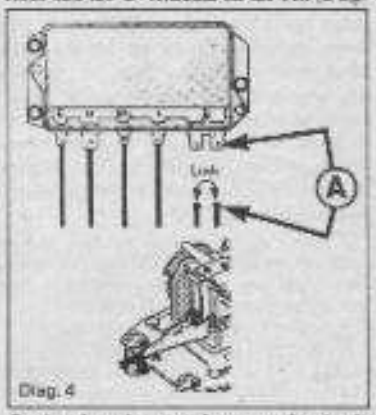

Putting the voltage regulator out of action by clipping the contacts and running the engine to show dynamo maximum output on the ammeter. Do this with the headlamps on.

Associated Dynamo	*Nominal Setting*
C40/1 (Fan 4½" or 114.3mm) dia.	20A
C40/1 (Fan 5" or 127mm) dia.	22A
C40A	10.5A
C40L	25A
C42	30A
C47	30A
C48	35A
C45PV/6	25A
C40T	22A
C40T 22762 & 22769	18A

If the amperage figure is too high or too low, adjust the setting and re-check. If the correct setting is impossible to obtain, fit a new control box.

Note that on the later RB340 control box, adjustments are made by means of toothed adjustment cams and to turn these a special tool is needed.

If you can't obtain any of these individual settings, you'll probably need a new control box, but the checks you've made also mean that you've got good grounds to go along to see your local auto-electrician just to make sure. Fitting a new box, incidentally, is not difficult, that you can certainly do yourself. □

Using a voltmeter to check the voltage regulator.

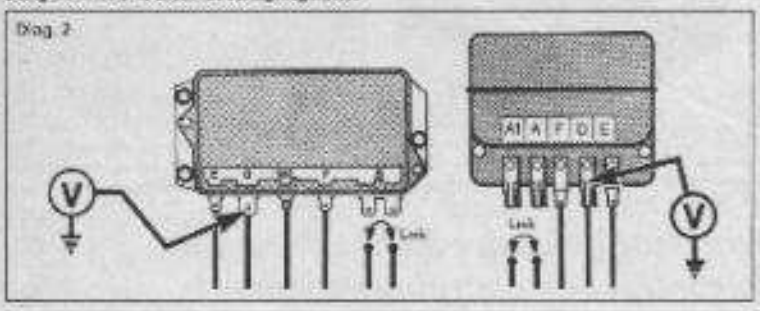

CIBE SEMI SEALED HEADLIGHT units
&
H4 HALOGEN GLOBES

I purchased the Cibe headlight units, making sure that they were Left Hand Dip for Australian conditions, as I had glowing recommendations from rally drivers.

Cibie H4 headlamps • 7 inch round

H4 high/low beam, convex (domed) lens

Halogen 120W/80W were origionaly fitted,but now Blue Halogen H4 65W/55W + 50% are fitted, which give about the same amount of light, but a bright white light.

REAL HEALEY NATTER
APRIL 1997 UPDATED AUG. 2010
HEADLIGHT RELAY

A query was raised about headlight relays, the theory is that if you shorten the connection and reduce the number of connections from the regulator to the headlights, you will get less voltage loss hence brighter headlights.

Over the years the Lucas push-in connectors corrode in their sockets, you could disconnect each one and either replace or polish it to it's original condition, but you are still left with the circuitous route of the wiring and wires which to my mind are too small. This starts at the regulator and goes to the headlight switch on the dashboard and then ducks down to the dip switch beside the clutch pedal before returning to the other side of the car and the connectors above the left hand front suspension. The relay system uses this wiring to supply power to operate only the relay and as the relay requires low amperage to operate it, voltage loss does not really come into the equation, as the headlight operating power goes straight from the regulator or alternator through the relay to the lights by the most direct route.

Confused? Well don't despair we'll now get down to the nitty gritty. Fused high and low beam headlight relays are available from most parts suppliers for about $34 and you will also need 2 metres of 20amp wire, running two 20 amp wires(4 metres) would probably be better if you wish to run 120 watt high beam globes (blue would be nice as it is the standard Lucas colour for headlights), 4 male and 2 female blue crimp bullet connectors and some crimp ring connectors. I mounted the relay low on the right hand side (see photo). Connect the B terminal of the relay to A on the regulator, or alternator main terminal if fitted. Disconnect the main loom blue with red trace (low beam) wire from the 4 way connector under the LH guard and connect with a new wire to S1 on the relay and connect H1 on the relay, back into the 4 way connector position where you removed the afore mentioned blue with red trace (low beam) wire. Do the same for high beam (blue with white wire to S2 and new wire from H2 on the relay). You may also require an earth wire depending on the relay. The extra wire coming out of the each of the terminals in the photo are because I disconnected the two original wires going across to the RH headlight connectors and ran two from the relay to those connectors under the RH
Not only do you have a shorter connection from the regulator or alternator but the lights now have fuses which the original system didn't. Cleaning the 4 way connector, the 2 way one on the right hand side and connections to the headlights would not go amiss.

Don't worry about the other relays in the photos, the one below the headlight relay is for an electric fan and the three on the shroud support are for fog and driving lights.

DMH-000
(The Hardie's 100)

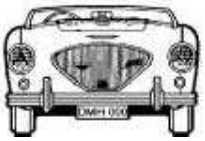

P.S. 6 Cylinderites will have to check the position of the connectors on their cars but the fitting should be similar.

UPDATED 14/08/10 Don Hardie

See wiring diagram and photos - next page

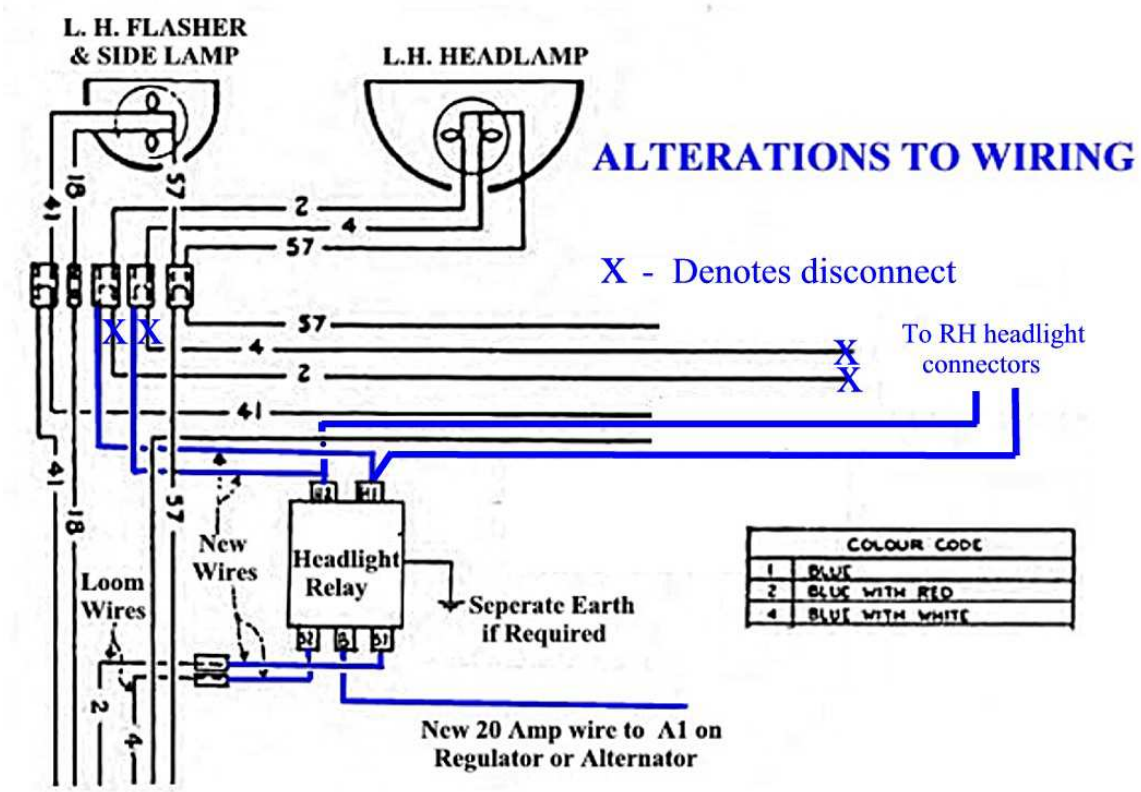

Typical headlight relay – available at most Auto parts suppliers or
http://www.naauto.biz/catalogue/category89/category96/product994
This one has external Blade Fuses whereas mine has internal Glass type.

HEADLIGHT STONE GUARDS

The stainless steel headlight stone guards were purchased on Ebay.
They are held on by the headlight rims and cleaning done with a 1” paint brush and soapy water, then a rinse with clean water and then a blow dry (don’t get caught using the better half’s hair dryer).

Don Hardie 06/15/2014 healeynut@hotmail.com

TECHNICAL REPORT
IGNITION TIMING

As I mentioned in an earlier discussion on distributors - on a trip to Melbourne and back, around 20 hours driving, the points open and close approximately ten million times. That's based on an average 2800 rpm in a six cylinder engine. Its recommended that you clean and reset the points every 3,000 miles which is a little more than two trips to Melbourne. The engine is running really sweet and you've spent some effort in getting the timing exactly right for the "1/2 leaded" super that's available now - no pinging, good mileage- per gallon, a lovely grey exhaust pipe and little or no running on. Its best to maintain this precise timing. Here's one way.

Start the engine and get it just warm (its easier to turn over by the fan then)

1. Making sure you can replace the leads in same order, remove the distributor cap and leads.
2. Remove the spark plugs - check the gaps .025".
3. Select neutral and handbrake on.
4. Using the cooling fan and a bit of pressure on the fanbelt rotate the engine to the point where No I cylinder (nearest radiator) is about to fire. Distributor rotor will be pointing toward the radiator cap (six cylinder) and the timing notch on the crankshaft pulley will be approaching the pointer on the timing cover. There's no notch or pointer on the 4 cylinder cars. Watch for the cam on the distributor as it comes around is and about to open the points.
5. Attach one lead of a 12V light to the distributor connection - the white with black wire that connects to CB on the coil. The other lead to earth on the engine.
6. Push on the rotor in a clockwise direction to make sure all play is taken up. Switch on the ignition.
7. Grab hold of the fan again and rotate the engine very slowly until the light just comes on. If you push clockwise on the rotor the light should go out. The points are now just opening. Push on the rotor and the points just close. If you've turned to engine too far you'll have to back off and start again making sure that the rotor is pushed back clockwise. The timing mark will be about 1/4" away from the pointer (5 degrees to 10 degrees BTDC depending upon your car). Switch off ignition. Disconnect wires.
8. Do not loosen the clamp bolt - the damp must stay on the distributor. Undo the 1/4" bolts, on either side and lift out the distributor.
9. Now you can dismantle and dean and check the distributor as far as wish to go. Clean and face the existing points or install new ones. Install a new condenser if you feel its needed. If you remove the cam make sure it goes back the same way into the advance weights, if you don't you'll be 180 degrees out with the timing. Don't mix up the weights either. If you remove the dog drive at the base it must go back- on the same way as the drive is offset.

10. Set the points to .016" gap, smear the cam with grease, point the rotor towards the radiator and replace the distributor. Turn ignition on, connect the white and black wire and 12V lamp. Replace the 1/4" bolts but don't fully tighten. The holes are slotted to allow rotation of the distributor back to your original timing. The 12V light just on and just off when you apply pressure to the rotor.

11. The tip oil the rotor should show a burn mark of about 1/4". If it is less than this then the vacuum advance is not working. Check out by sucking on the pipe. The cap deserves a good clean, also remove built up corrosion on the brass electrodes. Check the carbon brush moves easily - the spring can often be corroded. But as we said before, the engine was running sweet so there shouldn't be too much wrong anywhere. The main thing is that you've kept the same timing.

There is one minor point to take into consideration. As the rubbing block of the moving point wears on the cam, the points gap (dwell) will close up. This action causes the timing to become slightly retarded. A new rubbing block (on new points) will wear quicker than one that is already run-in. Therefore when we removed the distributor it may have been in a slightly retarded position and you may have to advance the timing with the micro adjuster. It should only amount to 5-7 clicks advance. There is heaps more to discuss regarding distributors - a well set-up one can really transform a car into a smooth sweet engine.

Have Fun
Barry Campbell

100 TECHNICAL
INDICATOR SWITCH

The successful operation of the self-cancelling indicator switch is dependent on three parts of the switchgear as follows:

1. The electrical circuit that is made and broken by a sliding contact which bridges across two of the three contact points on the lower switch body when the switch lever is moved either to the left or right, thus causing the direction arm to rise. This sliding contact is held against the points by a spring located in a recess adjacent to the boss of the lever.

2. The mechanism that will hold the lever at either end of the slide positions until such time as it is released by the return of the steering wheel to the straight ahead position.

3. The mechanism that will effectively release the switch lever and return it to its normal position.

OPERATION

When it is desired to operate the right hand indicator, the operating lever on the steering column is moved to the right. In a recess located in the boss at the rear of the lever is contained a spring-loaded plunger with roller contact that normally rests against a recess in the “V” shaped block. But on deflection to the right or left, depresses the respective lever release block until the tapered end meeting the inside face of the cup prevents further movement. (See Fig. 1)

At the same time the left-hand lever return spring is compressed and would return the lever to it’s original position if it were not prevented from doing so by the roller butting against the side of the “V” block and holding the lever against the compressed lever return spring in this position.
Rotating the steering wheel clockwise brings the projection in the lever release cup past the release block. The latter is not depressed as it is pivoted at the centre and is permitted to deflect to the left by a bevel in the body: a spring incorporated in the lever release block returns the two halves to the straight position when free to move.

On the return of the steering wheel no such movement is possible and the block is depressed by the projection in the lever release cup, pushing the roller upwards until it is clear of the side of the "V" block. This permits the lever return spring to move the lever back to its normal position shown by the dotted outline in Fig.1. This movement also breaks the electrical circuit at the contact points and the indicator returns to its closed position.

Fig.1

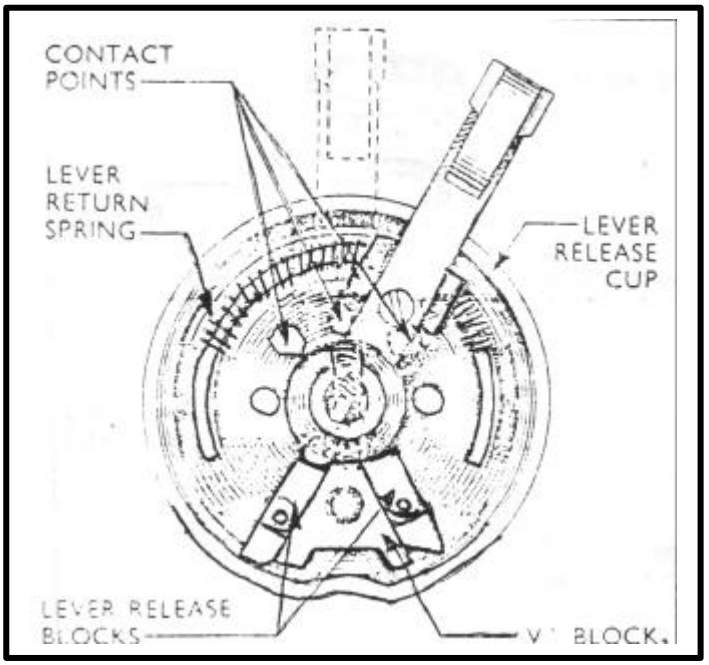

Removal of Switch Assembly

There should be very little need to interfere with the mechanism of the switch and it is better left untouched, unless for some reason it should cease to function. In this event the following sequence should be adopted: -

1. Disconnect the four leads from the base of the steering column by pulling them out of their respective snap connections.

2. Loosen the clamp nut and bolt at the end of the tube.

3. Withdraw the switch assembly carefully from the centre of the steering wheel taking care not to bend the tube.

Fig 2

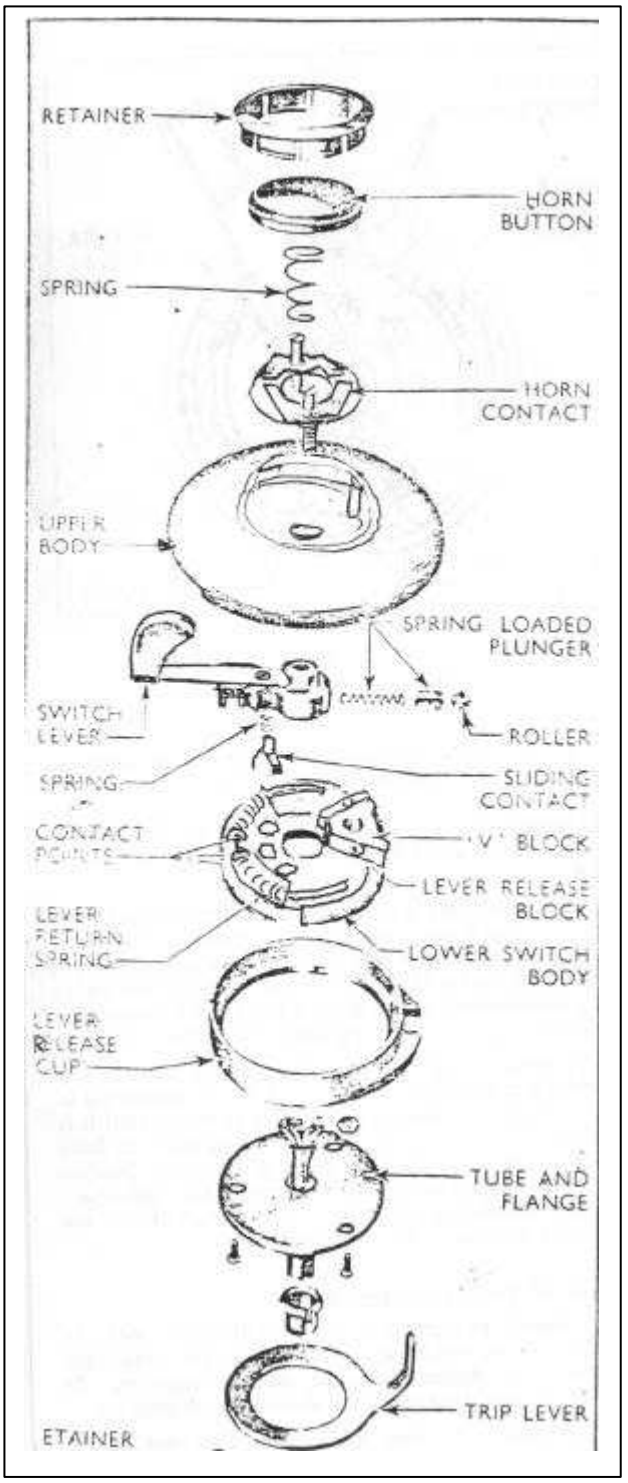

Dismantling the Assembly

1. Remove the horn button, retainer and spring from the centre of the upper body by lifting the retainer out carefully which will permit the horn button and ring to be detached.

2. Remove the three screws retaining the tube and flange to the lower body and withdraw the tube assembly.

3. Withdraw the lever release cup,

NOTE

The wiring connections to the lower body are now exposed and shown in Fig. 3.

When replacing a lead, or leads, it will be necessary to unsolder the nut, or nuts, to which they are connected, also the terminal eye if it is desired to withdraw a lead from the loom.

4. Unsolder the earth strap retainer nut, the horn lead (mauve) nut and the upper and lower body retaining nut.

Unless it is proposed to remove all the leads, the remaining three left-hand side (red), right-hand (green) and feed wire (yellow) may be left secured.

5. Detach the horn contact by removing the two retaining screws the nuts of which have to be unsoldered, i.e., earth strap and horn lead. Do not lose the earth strap and nuts.

6. To separate the upper and lower halves of the switch body, it will be necessary to remove the third screw now exposed by removal of the horn contact (Fig. 7.) the nut of which has also been unsoldered.

NOTE

This operation must be carried out carefully **the upper and lower halves of the body held together with the thumb and fingers, and gently lifting away the upper half so that the spring-loaded plunger and roller are not rapidly ejected when the pressure is released.**

7. Lift off the lever, lever return spring and guide. "V" block, contact blocks and sliding contact and spring.

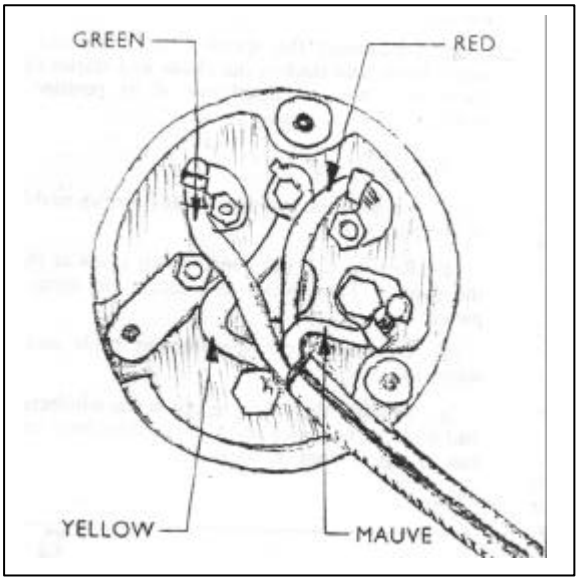

Fig 3.

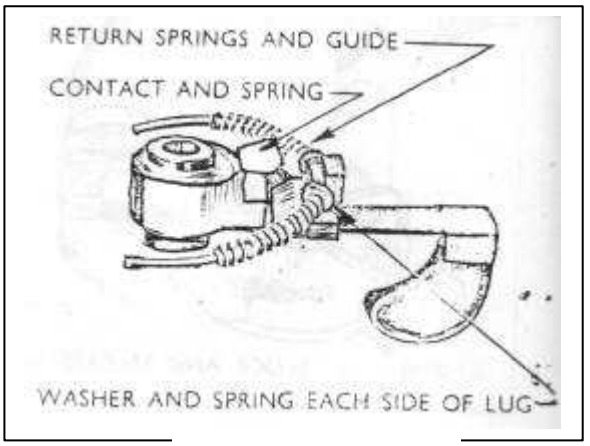

Fig 4.

Reassembly

1. Hold the switch lever upside down and position the sliding contact spring in its recess (See Fig. 4). Locate the switch lever return spring guide in the lug in the lever with one washer and spring on either side.

2. With the lever still held upside down, place lower switch body on the centre boss, then turn the assembly over and position the spring guide ends in the two grooves with the springs in compression against their respective shoulders.

Holding the lever in position against the switch body (see Fig. 5), press in the spring plunger and roller.

Then fit the "V" block against the compression of the plunger and roller so that it seats in the lower body.

3. Position the two release blocks in their grooves with the tapered ends pointing away from the “V” block (see Fig.6).

4. Fit the upper half of the switch body to the lower half, and secure by means of the retaining screw and nut (See Fig 7).

5. Position the horn contact and secure by means of the two screws to which the earth strap and horn lead should be attached at the ends. Assemble and re-solder all three nuts securely.

6. Fit the lever release cup and hold it in position while threading the leads through the flange and shaft. Secure the latter to the body assembly by means of the three screws.

7. Assemble the horn spring, button and retainer.

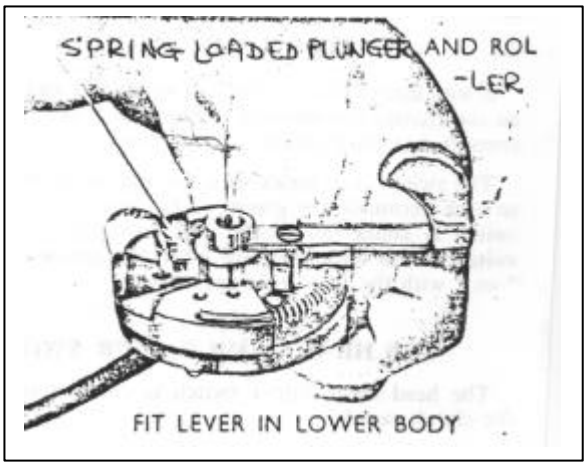

Fig 5.

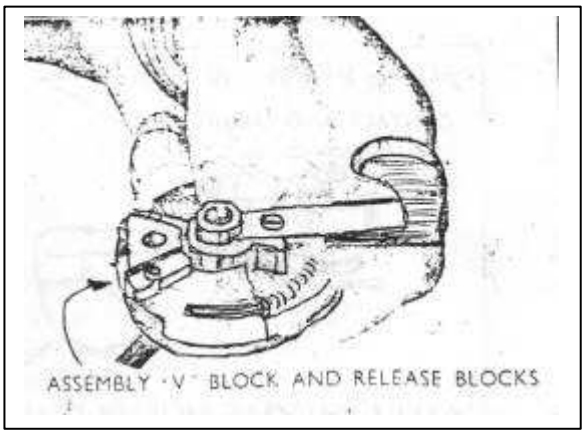

Fig 6.

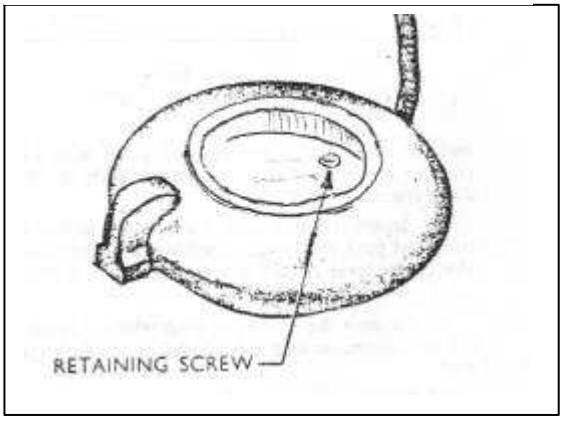

Fig 7.

To Replace

1. Position the anti-rattle bush over the tube and locate it at the body end.
2. Enter the leads and tube into the hollow end of' the steering shaft in the centre of the wheel, pushing the switch and tube assembly down the shaft gently with a continuous circular movement until the body is about 6 ins. away from the wheel.
3. Insert the anti-rattle bush in the hollow end of the tube and push the switch assembly into position so that the slot in the lever release cup engages the trip lever.

NOTE

Do not omit the anti-rattle bush, which is fitted to prevent lateral movement and subsequent rattle of the tube in the shaft.
4. Fit the "olive" and nut, at the base of the box, and tighten securely onto the tube.
5. Assemble the four leads to their respective snap connectors and operate the indicators to check satisfactory working, after switching on the ignition.

****

This article was taken from a Ford 8-10 HP Workshop Manual.

INERTIA REEL SEAT BELTS

The belts are installed with a Snap End which can be undone to change the belt from over the folded hood to under the raised hood. The snap ends, are on the outside of the seats on the floor.

Don Hardie 03 09 2001

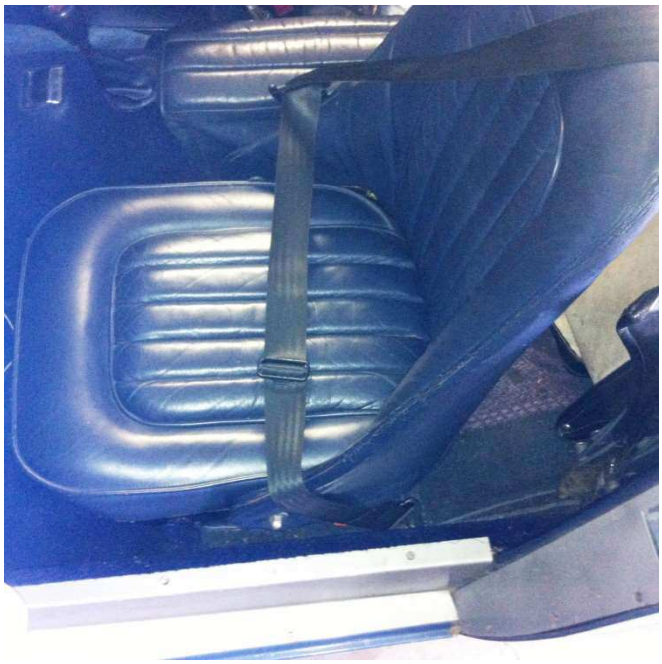

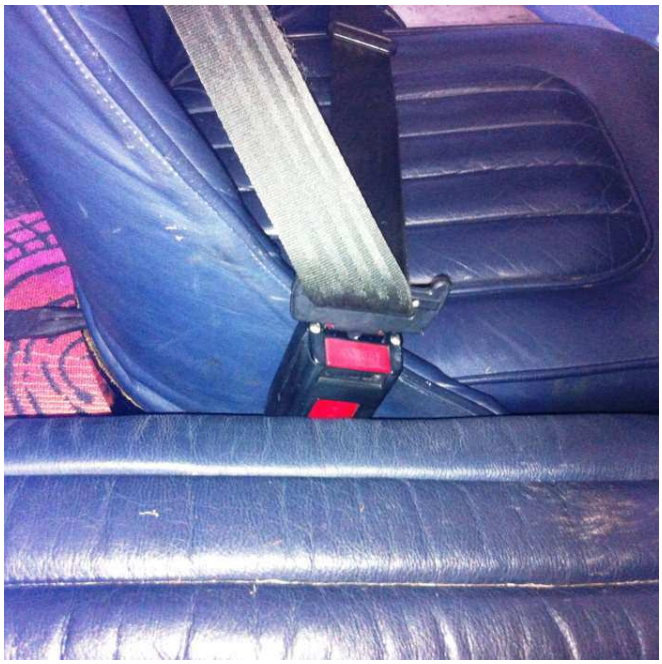

Snap End

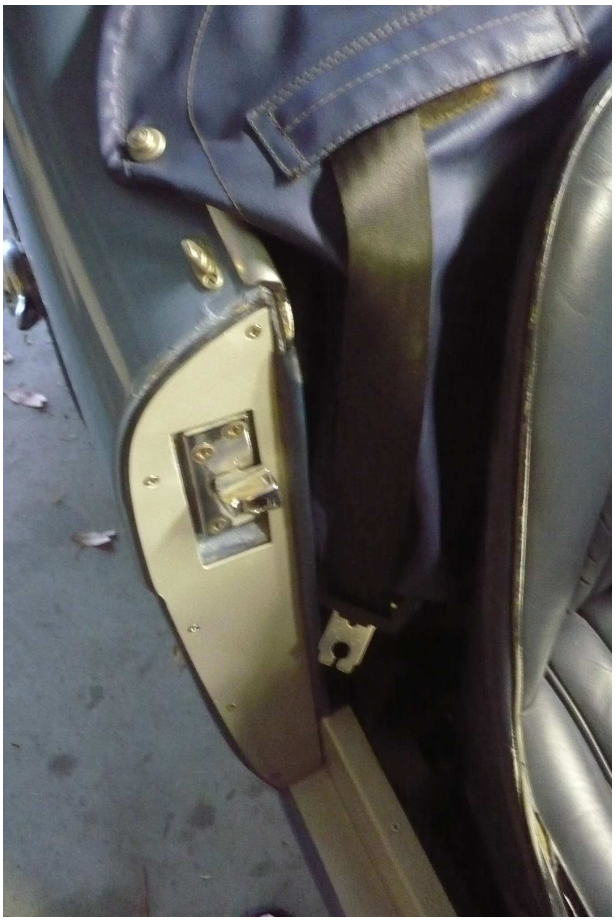

INNER SILL REPAIR

The inner sills sometimes sag in the middle with the weight of the front bulkhead at the front, the rear bulkhead at the rear and the driver in the center. The door shut at the rear of the driver's door was 1/8" at the bottom and just touching at the top, when I jacked up the centre of the inner sill the gap was 1/8" top to bottom. Suggestions were made on a Healey web group, (see below) that reinforcing the sill in its jacked up position was a common solution to the problem.

As both sills didn't have any rust, I removed both front and rear guards and the door and outer sill, also the seat, carpet etc.

I purchased two 1.8M lengths of 20mm square tube as suggested and opened up the rear of the sill inside the rear wheel arch. As the idea was to plug weld the square to the sill I drilled holes right through the sill 15mm from the top of the sill about 150mm apart, I thought the 1to 2 inches in the American article below was a bit of overkill and also down through the top of the sill.

One tube was cut to the length of the sill, inserted into the sill, supported so it was against the top and outer inner sides of the sill and plug welded through the drilled holes on the outside, top and inside.

The lower one was positioned so it touched the upper one at the front, this triangulated the repair, which I thought would be stronger. It was a bit of a fiddle to drill the holes in the correct positions, a couple were out of position and had to be welded up and new ones drilled. A piece of tube was welded vertically between the tubes at the rear and the hole in the rear wheel arch patched with a piece of panel steel. The welds were sanded smooth and the sill repainted.

When the guards, door and inner sill, were replaced and the jack removed, the door shut was even top to bottom. The door shut and locked as never before.

After that success I bit the bullet and did the passenger's side even though there was no problem there. The car feels a lot tighter on the road, so I think it was a worthwhile project.

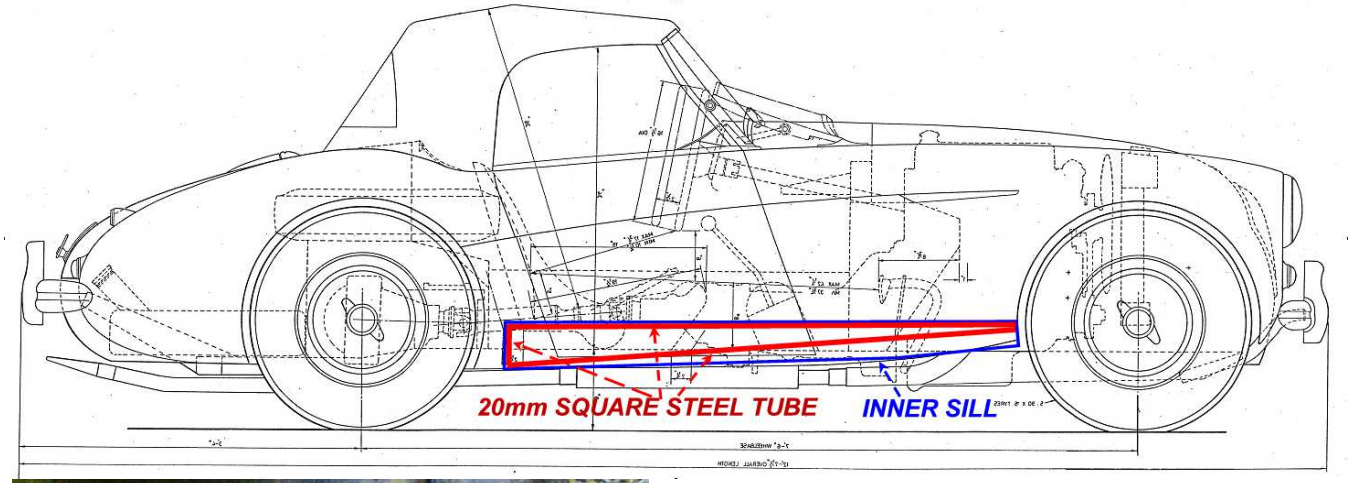

Not my car, but a photo from the web.

SEE THE AMERICAN ARTICLE BELOW

DOOR SILL REINFORCEMENT TECHNIQUE

By Mr. Finespanner®©

Anyone familiar with the weak points of Big Healey construction knows about door sills, especially if you are from a part of the world where salt is used for de-icing on the highways in the winter. Unlike the main frame rails and outriggers, the sills are made from two thinnish spot-welded pieces of sheet metal, and can be particularly susceptible to rot from within. Once that occurs the car will sag on the sides, assuming a banana shape that flexes going down the road. My first Healey, a northern Virginia BJ7, was so far gone in the sill department that the doors would fly open any time drove over railroad tracks. By this point in time most of the viable cars out there have undergone some sort of restoration, the first step of which is usually to deal with any fundamental rot, and generally involving replacement of the door sills unless you are lucky enough to start with a rust-free core. For the most part, when new sills are fitted they are replaced as original, with nothing additional done for strengthening. This article is for those who would like to go a little further. I first started doing this at the Rat Factory in the mid-70s, after observing an attempt at Hemphill's that didn't quite pan out, and it is used in all my sill repairs as well as by Bruce at Healey Surgeons. It is most easily done in the course of a full underbody restoration, but can be done to a finished car as well, with some extra effort.
Basically, the reinforcement is accomplished by the insertion of two lengths of ¾" square steel tubing inside the sill, with one piece running against the top and the other riding on the lower horizontal surface of the inner sill. The two lengths are just over five feet long, and are welded in place regular fashion or plug welded, depending upon access

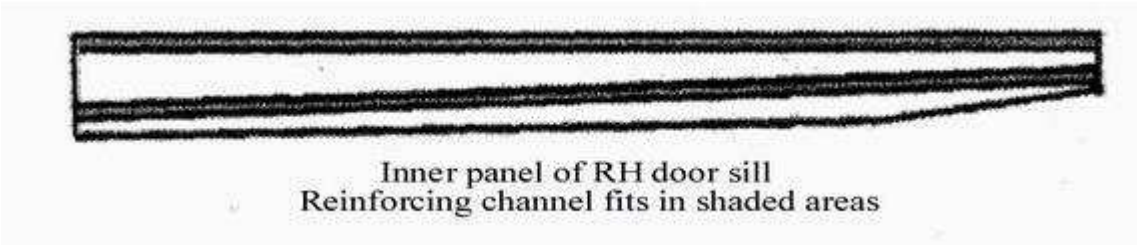

One advantage of this approach is that it provides additional material to attach to, so if your sill is only partially gone you can cut out the nasty bits, insert the tubing, and have a good substantial working surface for welding patches. If the majority of the old sill is still there this can be the most cost-effective approach, since a lot of relocating and re- aligning is then avoided. Of course, whether or not you reinforce the sills, any sag must be removed before sill renovation. Most Healeys can be "drooped straight" by positioning jack stands closer together between the front and the rear of the car, although I've seen one or two that were so clapped out the front and rear of the chassis had to be chained down and the center "X" member jacked in order for the sag to be eliminated. All fundamental welding is best done with the drive train and front suspension on the car.

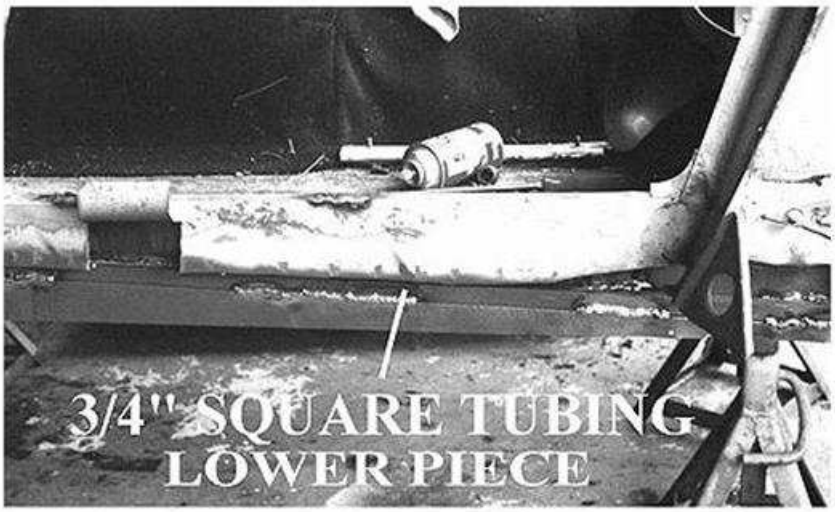

If your sills are already restored they can still be reinforced with box channel, but it is somewhat more difficult. On a finished car it is necessary to work from the back, slitting the folded lip at the bottom front of the rear wheel well and bending the sheet metal back to access the inside of the sill. At this point you can clean out any nasties inside the sill and paint the interior for additional rust-proofing. The insertion and welding is most easily done with the fenders, rear brakes, and rear hubs removed. In this situation the tubing would be plug welded in place by drilling through the top, upper and lower sides, and bottom of the sill at 1" – 2" intervals, then welding through the holes. The upper length is fitted first, tapped forward from the rear wheel well and seated up into the top of the sill with a long punch driving up through some of the bottom holes. With the upper length welded in, the lower one is tapped into place from the rear and seated by punching down through two holes drilled through the upper length, one down through the top front of the sill and one down through the top middle. Once all the welding is done the punch holes can be welded shut or just plugged with RTV sealer, and before closing them up you can use a funnel to pour more paint inside the sill if you really want to eliminate any chances of future rust. The ¾" square steel tubing can be found at welding supply centers or at an ornamental iron shop that does porch railings and the like. Best of all, this modification is completely invisible when finished, so you won't lose any concours points. It's like wetting your pants in a dark suit – you get a warm feeling, but not many people notice.

TECHNICAL REPORT
INSTRUMENTS

I thought this month I might make some general rambling comments on instrumentation, in particular the tachometer and speedometer.

How many of us are absolutely positive that our instruments are showing the correct reading? If they are not, it seems to me pointless having them at all. At best, a wrongly calibrated speedometer can be used as a guide only - at worst, if reading low, can result in a speeding fine, or if reading high can result in an unnecessarily slow journey and holding up other traffic. A wrongly calibrated Tacho can be even worse - if reading low, you can inadvertently over-rev the engine and cause mechanical damage, and if reading high, will prevent you from obtaining the proper performance from your car which after all, being a sports car, is the point of owning it.

Having established - hopefully - that having spent a bagful of gold on your car, you should spend a few more shekels getting the instruments right, let's look at the practicalities.

If the tacho or speedo isn't working at all, first of all disconnect the cable drive behind the unit under the dashboard, and check that the inner cable is turning. If not, the replacement of the inner cable may fix the problem. A word of warning here however - if the tacho or speedo mechanism is stiff or seized up, this may be the reason the cable is broken. If this is the case, do not hesitate to remove it from the dashboard (about 3 minutes work) and send it off to a reliable instrument make (such as Olympic Instruments, who advertise in Flat Chat) for a full overhaul and calibration.

If the instrument is working, but is fluctuating or jumping about, this could be caused by either a damaged or frayed inner cable, or a partly seized mechanism as mentioned above. To remove the inner cable, disconnect the outer cable at the back of the instrument, and then simply withdraw the inner cable. If on inspection it looks O.K. smear it with molybdenum grease and a few drops of oil before replacing.

If the instrument is working well and showing no bad symptoms it is still a good idea to check its accuracy. To check your tacho, most mechanical workshops or auto electricians can quickly check your instrument without the need to remove it from the vehicle. (Incidentally, if you wish to up-date your cable driven tacho to a more modern electronic unit, Olympic instruments can do this in your existing case for something in the vicinity of $200.00.)

To test the accuracy of your speedo there are several methods available. You could use the time-honored method of following your wife or husband in the family car, who can hold up one finger (politely!!) when reaching 60kph, two fingers (even more politely!!) at 80kph, three fingers (I'd grovel!!!) at 100 kph, etc. If you are driving the Healey you must either remember what speed you were doing at each of these speeds in miles per hour, or call them out to a passenger who will write them down,

When you get home, it's a simple matter to check from the following table-. -

40kph	=	25mph
60kph	=	37mph
80kph	=	50mph
100kph	=	62mph
100kph	=	68mph

Another method is to use the distance markers placed on some expressways by the R.T.A., where a marker is placed starting at 0km and then every kilometer up to 5km. Travel at a steady pre-determined speed, (say 100k/hr) measure the total time, and when you stop calculate the true speed and compare.

You can also use your tacho to determine your road speed provided you know your diff ratio and rolling circumference of your rear tyres.

Say your car has a 3,9 diff - the most common ratio (4 cylinder cars were originally fitted with a 4.1 diff, but many have been changed to 3.9). This means that if your engine is running at 3900 rpm in top gear the rear wheels are turning at 3900/3.9 or 1000 rpm Multiply this by the rolling circumference of your rear tyres - say 1.950 metres - and your roadspeed will be 1950 metres/minute or 117 kph (73mph). This basic principle will hold true for any given rpm, and by working backwards, you can calculate the engine speed for any given road speed using the following formula--

$$\text{Rpm} = \frac{\text{required mph} \times \text{diff ratio} \times 26.7}{}$$

For example, using the same tyre mentioned previously, in top gear with a 3.9 diff, will give the following engine speeds: -

30mph	1600rpm
40mph	2135 rpm
50mph	2670 rpm
60mph	3205 rpm
70mph	3740 rpm
80mph	4272 rpm

NOTE: These calculations are true for top gear only. If you want to calculate for speeds whilst using overdrive, you will need to know your overdrive step-up ratio and reduce the rpm figures accordingly.

Often a speedometer reads incorrectly because somewhere during the past 30 years or so something has changed - i.e. diff ratio, angle drive ratio, or your 3000 may now have a speedo, which was originally installed in a 100-6 with a 4.1 diff ratio. Even the rolling circumference of your modern tyres will be different to that of the original Dunlop Roadspeeds. To re-calibrate your speedo, once again it will have to be sent off to your friendly instrument repairman in order to change the internal gear ratio in the speedo.

To do this however, you will need to advise him of the number of times the internal cable turns while your car travels a distance of 20 metres. To determine this, disconnect the outer cable behind the speedo, and stick a piece of masking tape on to the end of the inner cable so that you can see it turning. Mark out a distance of 20 metres in your driveway, and then whilst pushing or slowly driving your car between the 20 metre marks, count the number of times your inner cable turns. With this information, the instrument repairer will be able to calibrate your speedo exactly.

Enough for now

Happy Healeying

John Dowsett

Smiths Instruments

AUSTIN HEALEY 100 BN1-2

Description	Year	Original Code	Superseded By	BMC Part #
Speedometer	53-56	51-118-508-01	SN.6106/01	
Speedometer for B/A 4.1-1	53-56	51-118-508-01	SN.6106/01	
Gear Box	53-56	80630		
Cable-Complete	53-56	53395. 5'-3"	DF.1110/00	
Cable-Inner Only	53-56	52108/1. 5'-3"	DI 1124/00	
Tachometer	53-56	51-118-104-01	RN 2301/00	
Cable Complete	53-56	57748/2. 2'-9"	DF 1118/00	
Inner Only	53-56	52108/1. 2'-9"	DI 1124/00	
Fuel Gauge	53-56	49422/219	FG 2530/19	
Tank Unit	53-56	80875	FT 5300/15	
Safety Gauge (Oil & Temp.)	53-56	42638/35	GD 1500/30	
Oil Temp. Gauge	53-56	20933/139	TG. 1502/17	
Petroflex Gas	53-56	PFP 183		
Thermostat Winter	53-56	85035/80		
Thermostat Summer		85035/70		
KLG Spark Plug	53-56	FE 80		
	53-56	FE 100 Comp.		
Heater Details				
Radiator Core	53-56	CHS 3503	SHF 7191/07	
Motor	53-56	CHS 364	FHM 3321	
Armature	53-56	CHS 341		
Brush	53-56	CHS 340	SHM 4401	
Rheostat Switch	53-56	CHS 1440/		

Smiths Instruments

AUSTIN HEALEY "6" BN4 1957 & BN6 1958

Description	Year	Original Code	Superseded By	BMC Part #
Speedometer Std. Trans.	57-58	SN.6105/06		
Speedometer O / D	57-58	SN.6105/08		
Gear Box for above	57-58	BG 2401/00		
Cable-Complete Std. Trans.	57-58	DF 1104/00. 4'-8"		
Cable-Inner Only Std. Trans.	57-58	DI. 1110/00. 4'-8"		
Cable-Complete O / D	57-58	DF 1104/00. 5'-2"		
Cable-Inner Only O / D	57-58	DI. 1110/00. 5'-2"		
Rev. Indicator [Tachometer]	57-58	RN 2301/01		
Rev. Indicator [Tachometer]	Late 58	RN 2301/03		
Cable-Complete		DF. 1118/00. 4'-0"		
Cable-Inner Only		DI 1110/00. 4'-0"		
Fuel Gauge	57-58	FG 2530/03		
Tank Unit	57-58	80875	FT 5300/15	
Safety Gauge (Oil & Temp.)	57-58	GD 1502/00		
Safety Gauge (Oil & Temp.)	Late 58	GD 1502/05		
Petroflex Gas	57-58	PFP 192		
Petroflex Oil	57-58	PFP 173		
Thermostat Winter	57-58	85025/86		
Thermostat Summer	57-58	85025/70		
KLG Spark Plug	57-58	FE 75		
		FE 100 Comp.		
Heater Details				
Radiator Core	57-58	SHF 7516/11		
Motor	57-58	CHS 720	FHM 4431	
Armature	57-58	CHS 852	SHM 1550	
Brushes	57-58	CHS 4433	SHM 4402	
Blower Body	57-58	CHS 4854	SHB 1301	
Water Valve	57-58	FHW 1222/22		
Water Valve Diaphragm	57-58	CHS 4018/1	CH 71602-01	
Water Valve Seal	57-58	CHS 4653	CH 78116	
Demister Hose 1 ½" x 11 ½"	57-58	CHS 3278/46	FHD 7115/46	
Demister Hose 1 ½" x 13 ½"	57-58	CHS 3278/54	FHD 7115/54	
Demister Elbow (2)	57-58	CHS 2289	FHD 4301	
Air Hose 3 ¼" x 30"	57-58	CHS 3279/120	FHD 7132/120	
Control Escutcheon	57-58	CH 84230/11		

Smiths Instruments

AUSTIN HEALEY 3000 MODEL BN7 & BT7

Description	Year	Original Code	Superseded By	BMC Part #
Speedometer Std. Trans.	59-62	SN 6155/19		BHA4124
Speedometer O / D	59-62	SN 6155/21		BHA4126
Gear Box	59-62	BG 2401/00		
Cables-Complete Std. Trans.	59-62	DF 1104/00. 4'-0"		NIV 390 4'-0"
Cables-Inner Only Std. Trans.	59-62	DI 1110/00. 4'-0"		NIV 391 4'-0"
Cables-Complete Overdrive	59-62	DF 1104/00. 4'-8"		NIV 390 4'-8"
Cables-Inner Only Overdrive	59-62	DI 1110/00. 4'-8"		NIV 391 4'-8"
Tachometer	59-62	RN 2351/03		1B9188
Cable-Complete	59-62	DF. 1118/00. 4'-0"		NIV 394 4'-0"
Cable-Inner Only	59-62	DI 1110/00. 4'-0"		NIV 395 4'-0"
Fuel Gauge	59-62	FG 2530/03		1B9061
Tank Unit	59-62	FT 5300/15		1B2736
Safety Gauge (Oil & Temp.)	59-62	GD 1502/05		AHB5758
Petroflex Gas (pipe to pump)	59-62	PFP 192		AHB5366
Petroflex Oil (engine to oil gauge)	59-62	PFP 173		8G637
Thermostat Winter	59-62	85025/86		NIV263
Thermostat Summer	59-62	85025/70		NIV262
KLG Spark Plug / BMC=Champion	59	FE 70		UN12Y
KLG Spark Plug / BMC=Champion	60	FE 75		UN12Y
Heater Details				
Radiator Core	59-62	SHF 7535/11		
Motor	59-62	FHM 5432		17H1
Armature	59-62	K 78		K 78
Brushes	59-62	SHM 4407		SHM 4405
Blower Body	59-62	SHB 1301		
Water Valve	59-62	FHW 1272/22		
Water Valve Diaphragm	59-62	CH 71602-02		
Push Pull Switch	59-62	FHC 6111/02		
Push Pull Switch	59-62	FHC 6162		13H78 [?]
Control Escutcheon	59-62	CH 84230/11		

Smiths Instruments

AUSTIN HEALEY 3000 BJ8 [1964 – 1968]

Description	Year	Original Code	Superseded By	BMC Part #
Speedometer Std. Trans.	64-68	SN 6125/20		BHA 4427
Speedometer O / D	64-68	SN 6125/22		BHA 4429
Gear Box	65-68	BG 2401/00		1H 3131
Cable-Complete Std. Trans.	64	DF 1104/00. 3'-6"		BHA 4294
	65-68	DF 1104/32. 3'-6"		BHA 4294
Cable-Inner Only Std. Trans.	64-68	DI 1110/00. 3'-6"		
Cable-Complete Overdrive	64	DF 1104/00. 4'-3"		BHA 4293
	65-68	DF 1104/32. 4'-3"		BHA 4293
Cable-Inner Only Overdrive	64-68	DI 1110/00. 4'-3"		
Tachometer (Impulse)	64	RV1 2602/00		BHA 4431
	65-68	RV1 2602/00A		BHA 4431
Fuel Gauge	64-68	FG 2333/10		BHA 4432
Tank Unit	64-68	FT 5346/52		BHA 4435
Safety Gauge (Oil & Temp.)	64-68	GD 1301/02 [6' 6" cap]		BHA 4433
Petroflex (pipe to carb)	64-68	HE 68100/03 20 ¾"		HHB 6715
Petroflex (carb to carb)	64-68	HE 63201/00 2 1/16"		12B 883
Petroflex (block to gauge)	64-68	PFP 173		11B 2030
Thermostat Winter	?	85025/86		
Thermostat Summer	?	85025/70		
Crankcase Emission Valve	64-65	FVP 2001/02		13H 661
	66-68	FVP 2003/02		
KLG Spark Plug	64	FE 75		
	65	FE 75 or FE 70A		
	66	FE 75 or FE 65P		
	68	FE 55P		
Heater Details				
Radiator Core	64-68	SHF 7535/11		
Motor	64-68	FHM 5432		17H 1
Armature	64-68	K 250		
Brushes	64-68	SHM 4406		
Brush Kit	64-65	K 517		
	66-68	K 518		
Blower Body	64-68	SHB 1301		17H 819
Water Valve	64	FHW 1272/22		
Water Valve Diaphragm	64	CH 71602-02		
Water Valve Seal	64	CH 78116		
Motor Switch	64	SHC 3401		
Control Knob	64	CH 85216-51		
Control Escutcheon	64	CH 84230/11		
Fan	64	CH 71619		
Radiomobile				
Manual	64	62T		
	65-66	72T		
	68	RM72		
Pushbutton	64	902T		
	65-66	972T		
	68	RM972		
Fitting Kit	64-68	EK/AH 07		
Aerial	65-68	AW 92/60		
"Radiomate" AM/FM	68	RM13		

Smiths Instruments

Sources :

S. Smith & Sons (Canada) Ltd / Smiths Industries North America Ltd
- catalogues from 1949 to 1980 ; listings for "Original Equipment for British and European Cars".

Binder # 1	Binder # 2
1949-1962	1965
1959-1960	1966
1961	1968
1962	1971
1963-1964	1976-77
	1980

BMC "Fast Moving Parts List"
1965

BN1 INTERMITTENT WIPERS

After making the wipers self parking I remembered that I had fitted an intermittent module to my Rover 2000 in the `70s. I googled the internet and found that Hella made one and it's price was $80, further searching brought up some kits, which had to be assembled and an assembled module at an American company – Qkits – has a Maxx Tronic for $10.95 US.
http://store.qkits.com/
The unit can't be used on a BN1 without the self parking modification or a self parking wiper motor fitted.
I ordered the module, a plastic case to mount it in and a knob to turn it on and also adjust the intermittent timing.

Order Form				
Item No.	**Item to Purchase**	**Qty.**	**Price after Options**	**Ext. Price**
MXA041	Windshield Wiper Timer Module	1	$10.95	$10.95
WCAH2855	ABS Plastic Box	1	$2.95	$2.95
27954-217	Flanged Knob	1	$1.95	$1.95
			Subtotal:	$15.85
			Shipping (Air Mail):	$10.00
			Total:	$25.85

Note: All amounts are shown in US Dollars

The minimum parts order is $15 US

Their website only listed postage to Australia at $30 to $42 US, I emailed the sales and was told basic postage was $10 and I should place the order with whatever postage came up, contact them to let them know my order was placed, they would change the postage to $10 and then I could forward the corrected payment via Paypal.
I did all this and the cost came out as $33.24 AU.
sales@qkits.com

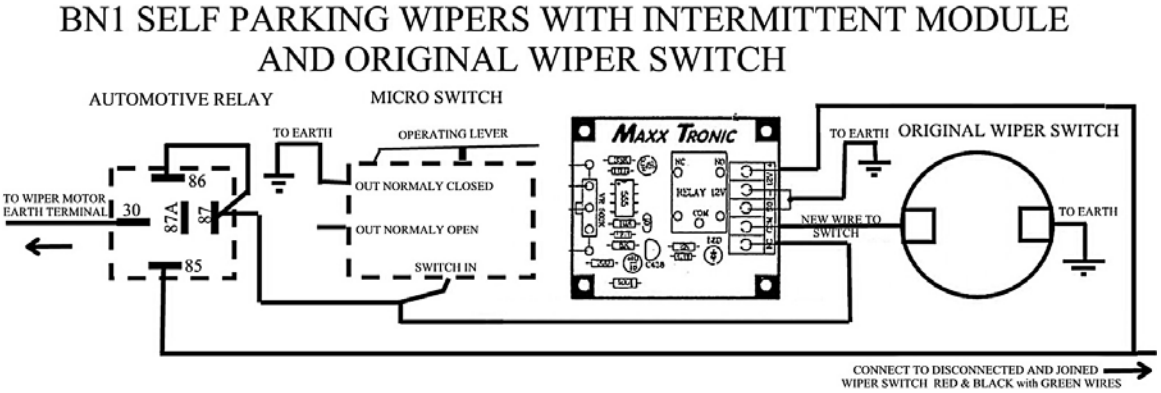

The above is how you wire the unit up if you use the original wiper switch. To use the delay unit turn the knob to switch it on and then turn clockwise to get the timing from 3 to 30 seconds. To use the normal wipers turn the unit off and pullout the original wiper switch.
You must turn the wiper unit off before you turn the ignition switch off or the unit will start immediately next time you turn the ignition on again.

Below is how I wired mine up using a spare headlight switch, which I had.
The beauty of this is you don't have to turn the unit off just leave at your favorite timing setting. When you pull the switch out to the first position it actuates the unit at the setting you last left it at, when you pull it out to the second position the unit is disconnected and the wipers work at full speed. Pushing the switch back to the first position, the wipers go back to the intermittent setting and pushing it right in turns everything off and parks the wipers. The wiper labeled knob fits the switch.
Relay 1 doesn't need the 87A terminal but relay 2 does.
The 1N4007 Diode (Dick Smith 9cents) is required to stop the intermittent unit actuating the relay when the switch is in the first position.

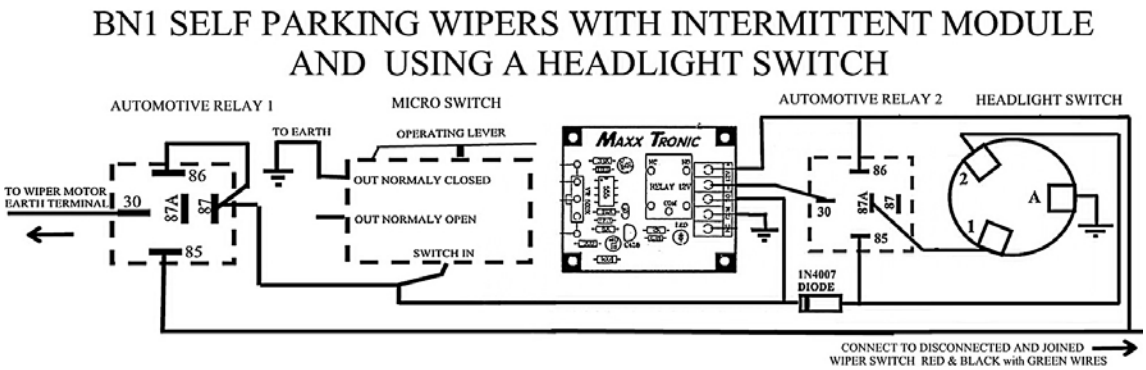

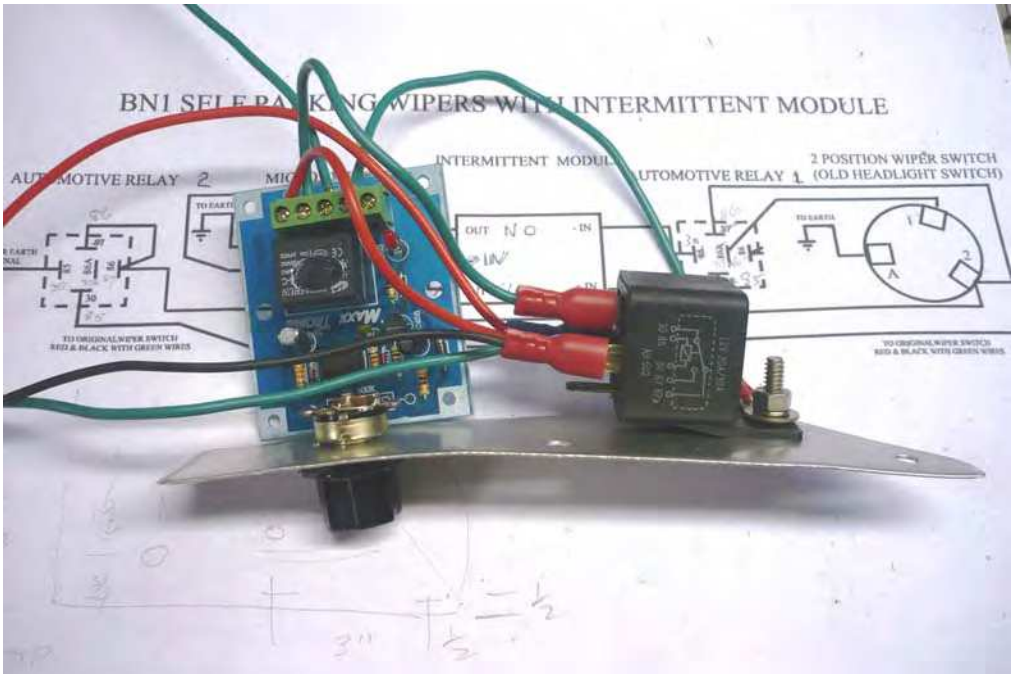

I was lucky as there were two holes in the dash bottom flange and I was able to mount the unit and relay as above, but had to turn the relay though 90deg. and move it closer to the unit to avoid the demister hose.
. The switch knob doesn't protrude below the flange but is still easy to adjust. The plastic box was too small, so was discarded.

NOTE

The above instructions are for Negative Earth, if you are using Positive Earth the power connections to the unit will have to be swapped and the diode swapped end for end.

Don Hardie

17/07/09

INTERMITTENT WIPERS

I had fitted an intermittent module to my Rover 2000 in the `70s so I Googled the internet and found that Hella made one and it's price was $80, further searching brought up some kits, which had to be assembled and an assembled Maxx Tronic module at an American company – Qkits –for $10.95 US.
http://store.qkits.com/
I ordered the module, a plastic case to mount it in and a knob to turn it on and also adjust the time delay.

Order Form				
Item No.	Item to Purchase	Qty.	Price after Options	Ext. Price
MXA041	Windshield Wiper Timer Module	1	$10.95	$10.95
WCAH2855	ABS Plastic Box	1	$2.95	$2.95
27954-217	Flanged Knob	1	$1.95	$1.95
			Subtotal:	$15.85
			Shipping (Air Mail):	$10.00
			Total:	$25.85

Note: All amounts are shown in US Dollars

The minimum parts order is $15 US
Their website only listed postage to Australia at $30 US to $42 US, I emailed the sales and was told basic postage was $10 and I should place the order with whatever postage came up, contact them to let them know my order was placed, they would change the postage to $10 and then I could forward the corrected payment via Paypal. I did all this and the cost came out as $33.24 AU. sales@qkits.com

Below is how you can wire the unit up if you use the original wiper switch. To use the delay unit turn the knob to switch it on and then turn clockwise to get the timing from 3 to 30 seconds. To use the normal wipers turn the unit off and pullout the original wiper switch. You must turn the intermittent unit off before you turn the ignition switch off or the unit will start immediately next time you turn the ignition on again. In a BN1 you'll have to switch it off at the end of the wiper stroke, the same as you do with the wiper switch.

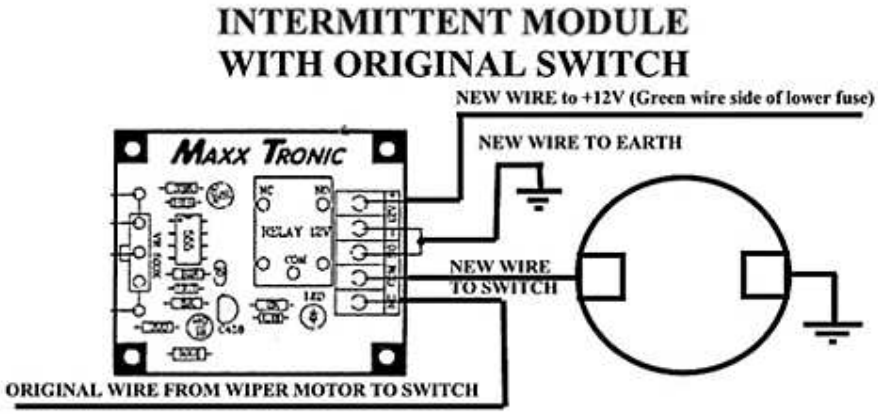

I was lucky as there were two holes in the dash bottom flange and I was able to mount the unit and relay as above, but had to turn the relay though 90deg. and move it closer to the unit to avoid the demister hose. . The switch knob doesn't protrude below the flange but is still easy to adjust. The plastic box was too small, so was discarded, maybe the unit would fit in the next size up.

Below is how you can wire the unit up using a headlight switch. The beauty of this is you don't have to turn the unit off just leave at your favorite timing setting. When you pull the switch out to the first position it actuates the unit at the setting you last left it at, when you pull it out to the second position the unit is disconnected and the wipers work at full speed. Pushing the switch back to the first position, the wipers go back to the intermittent setting and pushing it right in turns everything off and parks the wipers. The existing wiper labeled knob fits the new switch. The 6A10 Diode (Dick Smith $1.35) is required to stop the intermittent unit actuating the relay.

INTERMITTENT MODULE to BJ7
WITH HEADLIGHT SWITCH

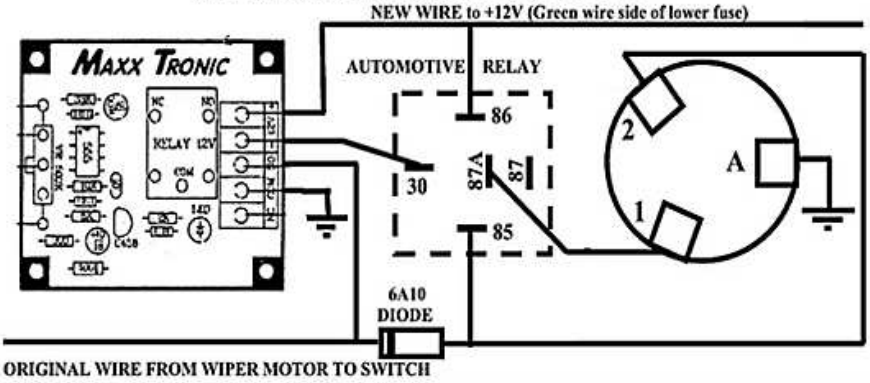

BJ8

For the BJ8 you can wire it up using a headlight switch or a 3 position toggle switch available at most electronic suppliers.. When you move the switch down to the first position it actuates the unit at the setting you last left it at, when you move it down to the second position the unit is disconnected and the wipers work at full speed. Raising the switch back to the first position, the wipers go back to the intermittent setting and raising it right up turns everything off and parks the wipers. The 6A10 Diode (Dick Smith $1.35) is required to stop the intermittent unit actuating the relay

INTERMITTENT MODULE FOR BJ8
WITH 3 POSITION TOGGLE SWITCH

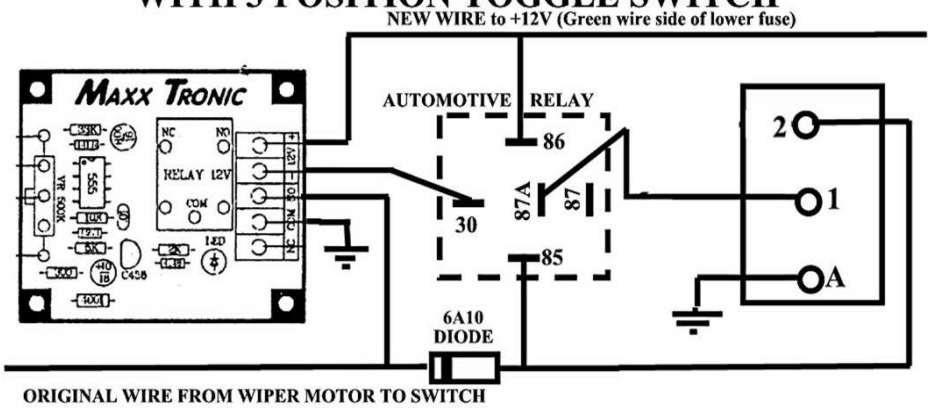

NOTE

All the above instructions are for Negative Earth, if you are still using Positive Earth the power connections to the unit will have to be swapped and the diode swapped end for end.
Don Hardie 19/07/09

Don Hardie healeynut@hotmail.com

INTERNET DOWNLOAD

Is this an Austin Healey 3000 MK IIIA BJ8 ?
No, it's 'Junior' - the detailed and driveable half car sized model.
.... it's accurate too - except Junior won't leak oil ....
The difference between men and boys USED to be the size of their toys...
Just when your wife thought all your toys lived in the garage
- here's a great toy you could even park inside!

After hundreds of hours of measurement, mould making, and painstakingly detailed handcrafting,
Colin Rule has produced a driveable model. Unlike most models - 'Junior' actually goes!
It is powered by a strong electric motor, and is even robust enough for 'Dad' to sit on and drive.

From this angle - it looks like there's an Austin Healey 3000 Mk IIIA BJ8 parked in the driveway...

Bonnet (hood) and boot (trunk) lid both open.....

.... it even has a burl walnut look dash & fully trimmed interior...

Looks great, doesn't it!! Now - lets put Junior into perspective....

Here's Junior parked beside my Austin Healey 3000 Mk IIIA BJ8

Children can sit 'in' the 'proper' trimmed front bucket seats to drive Junior - but 'big kids' (like Colin!) sit 'on' the rear '+2' seats. Got a better idea of the scale now?....

My 6 year old daughter Rebecca - one of the elite "authorised Junior test pilots"!

The 'Junior' is the product of Colin Rule, Coolibah Convertibles - recognised by many as one of Australia's foremost Austin Healey restorers. Colin himself has been a Big Healey owner for most of the past 33 years. Coolibah Convertibles has been a 'Austin Healey only' restoration business, on the Central Coast, NSW, Australia (about 1 hour North of Sydney) for the past 15 years. Many concourse winning cars in Australia are testimony to Colin's workmanship. Colin restored my 'black & white' Healey 3000 BJ8 depicted on the rest of this website - and Colin also owns the ex-Ross Bond Healey 3000.

KING PIN ROLLER THRUSTS

AH Spares have king pin roller thrusts that they claim give an almost power steering feel.

They also have shims (SUF 126) to adjust the king pin end float. They say you need 6 per car but I had to use 14, they say they are 4 thou thick but mine were 3.

Jack up under the spring pan, to remove the top trunnion but first you have to remove the pin through the shock arms and the rubber bushes. There's a chance that the pin will be rusted to the steel tube inside the bush and you might have to hacksaw through it both sides of the trunnion. Then you can remove the trunnion nut, trunnion and steel & bronze thrust.

Measure the distance from the step on the king pin to the top of the stub axle and subtract the distance from the step inside the trunnion to the roller bearing fitted inside the trunnion to get the end float.

Install the thrust with sufficient shims to leave 2 thou end float, replace the trunnion and tighten the top nut. Check the end float by using a long screwdriver under the stub axle and over the wishbone to lift it and note the movement. Measure this end float, with the stub axle lifted up, between the bottom of the stub axle and the bottom of the king pin with Feeler Gauges and adjust the number of shims if necessary to get the required 2 thou end float.

If you don't have Dial or Digital Callipers use the method above with Feeler Gauges.

Remove the trunnion, grease the thrust and install with the required shims on the king pin, install the trunnion, bushes, trunnion pin, tighten every thing up and you're done.

Don Hardie

healeynut@hotmail.com

22/10/2008

I've just come back from my first run with the races fitted and found it hard to believe the difference. AH Spares claim that they give an almost power steering feel is right, the steering is so light that it will take some time to get used to it.

Don

4/11/2008

REAL HEALEY NATTER

KNOCK-ON-HUBS & WHEELS

The May edition of the English magazine MOTOR SPORT had a very interesting article on the RUDGE-WHITWORTH HUB more commonly known as KNOCK OFF (or KNOCK ON) HUBS. The Editor Paul Fearnley has kindly given permission to reproduce the article in our magazine, so here goes.

TECHNOFILE

RUDGE-WHITWORTH HUB

INVENTED TO DEAL QUICKLY WITH FREQUENT PUNCTURES, THIS RAPID-RELEASE SYSTEM BECAME STANDARD IN GRAND PRIX RACING AND LASTED UNTIL THE 1960s. KEITH HOWARD DESCRIBES WHY THE KNOCK-OFF HUB-SPINNER IS EVEN MORE INGENIOUS THAN IT LOOKS

Legend has it that the centre lock wheel - originally known as the QD (quickly detachable) wheel - came into being as a result of two Coventry men sharing a car one day during the early 1900s. One of them was John Pugh, whose father Charles had established the Whitworth Cycle Co. in 1891 and three years later rescued the ailing Rudge Cycle Co. to form Rudge-Whitworth Ltd. The other was Victor Riley of the rival Riley Cycle Co.

When the car they were travelling in suffered a puncture, the two men agreed there must be a better way of dealing with a flat tyre than the Stepney rim system then in use, whereby rim and tyre were removed from the wheel and a replacement slid into place. Inspired by this shared experience, Pugh and Riley each designed centre-lock wheels that -could be quickly removed by undoing a single large wheel nut, although the details of their fixing arrangements differed.

Legend also has it that, following many years of consequent patent litigation between their two companies, Pugh and Riley agreed to bury the hatchet in a train carriage on the eve of WW1.

Whatever the truth of these two incidents, the essentials are correct. Rudge-Whitworth, Riley and the Goodyear Wheel Company were all involved prolonged legal wranglings as to who owned the intellectual rights to the detachable wheel, right up till the outbreak of hostilities in 1914. In fact the Great War intervened in more ways than one. Once it was over, Riley considered there were bigger fish to fry and withdrew from wheel manufacture, despite having supplied a remarkable 183 car makers world-wide by 1912. Rudge-Whitworth continued.

Amazingly, the Rudge-Whitworth wheel was originally sold as what today we'd call an aftermarket figment. Automobile tyres were in their infancy - the early years of last century - and tediously puncture-prone, so being able to repair a flat tyre quickly was important. Pugh's centre-lock wheel was fast to remove and replace but like the Riley equivalent, it required changes to the hub as well as to the wheel itself. So hub and wheel kits were offered as replacements for the most popular cars of the time, some hubs even including brake drums.

If everyday motoring was blighted by tyre unreliability, in the emerging sport of motor racing it was a major issue. Being able to change a wheel quickly in the event of a puncture, or when the tyres were worn, could win you races. So it was inevitable the detachable wheel should find its way into competition. Some people fretted about retaining a wheel with a solitary nut - particularly one that lacked the Riley wheel's evolving positive locking arrangements - but they didn't appreciate the subtlety of Pugh's design. By an apparent miracle, it was self-tightening.

EMI, of all people, eventually bought that with the intention of moving operations to its Hayes factory in Middlesex, but war with Germany once again intervened. Jaguar acquired the rights to Rudge's wheel business and together with Dunlop continued to exploit the design - first with wire wheels, then disc wheels - long after WW2 finished, on the XKs, C-type, D-" and E-type. Similar designs were used by others like MG.
Simple, effective, failsafe, the Rudge-Whitworth wheel was an object lesson in how a little original thought can save a lot of engineering complication. So why isn't it still used?

062
(THE HARDIES 100)

PS. The answers to the last question is undoubtedly cost, the good tyres we now have and the better(?) roads .

TECHNICAL REPORT
KNOCK-0N-HUBS

A recent mishap by one of our members (names will be withheld to protect the embarrassed) highlighted what can happen if some basic precautions are not taken when working on the front suspension.

In this particular instance, the front hubs had been removed for servicing and were inadvertently replaced on the wrong side of the car. (You of course will be aware that the knock-on threads are handed, the right-hand knock-ons having a left-hand thread, and vice-versa.) The result of this was that going up BellBird Hill, one of the front wheels worked itself loose and finished up in the bushes, fortunately without causing serious injury to car or driver.

It occurs to me there are some other important points to be considered regarding front and rear hubs, so 1 would like to list them for you.

1 As mentioned above, always be sure to install front (and rear) hubs on the correct side of the car. The hubs are usually stamped L or R, but if in doubt, the appropriate knock-ons have "Right" and "Left" cast into them.

2. Wheel bearings must also be installed the right way around so that the sideways thrust of the wheels is properly controlled. This is fairly obvious with tapered roller bearings, but is not always so obvious with the earlier ball (angular contact) bearings.

3. 1 am a strong believer in retaining the spacer piece between the inner and outer bearing which is sometimes left out. This spacer adds enormously to the strength and rigidity of the front stub axle, but it is important, however that this spacer be properly adjusted, using shims if necessary. If you plan on doing this, and need advice, please talk to me.

4. The stub axles themselves, if original, are now some 35 to 45 years old, and the odds of there being fatigue cracked are about *50%.* I once sent a batch of 8 stub axles to be crack tested, and 5 of the 8 were cracked! As a result I will not re-use a stub axle unless under specific instructions from the owner, and always exchange them for a re-built stub axle as a matter of course.

5. On the rear hubs, main points to be watched for are:-

A) Leaking hub seal

B) Leaking flange joint.
(Either of these faults can saturate your brake shoes with oil, spoiling your brakes, and can also lead to very messy wheels and hubs.)

C) Make sure the main hub nut is properly tightened and split-pinned.

D) When bolting the rear hubs onto the studs, it is a good idea to clean the threads with "Brakleen" and use a little blue "Loctite", so that the nuts don't work loose.

Enough for now - maybe next month I will cover some points regarding wheels and splines.

Tip of the Month

When you have a wheel off whilst working on something, always screw the knock-on back on while you work. This will keep rubbish out of the thread, and will stop black grease from getting on your clothes.

Happy Healeying!

John Dowsett.

N.S.W. AUSTRALIA
Austin-Healey
OWNERS CLUB
FLAT CHAT

May 2001

Tip of the Month:
*When changing your differential, the easiest way to re*place *the diff oil is to pour it down one of the axle tubes (using a funnel) before replacing the axle.*

Happy Healeying,

John Dowsett

N.S.W. AUSTRALIA Austin-Healey OWNERS CLUB FLAT CHAT

April 2001

LEAKY HOOD CAUSES & FIXING

With regard to Colin Roberts' comments on his leaky hood. I consider that problems being experienced these days stem from two counts.

1. INCORRECT FRAME ALIGNMENT:

This may be caused by-

A- The frame may have been removed to repair rust in the quarter panel to which it is bolted, with subsequent loss of the original mounting points.

B- Excessive play in the frame pivots and particularly between the frame and its mounting plates.

C- Screen stanchions out of alignment with each other.

D- Excessive play between the screen and stanchions.

E- Frame is bent.

F- Almighty shunt.

2. WORN OVERCENTRE CLAMPS

****

To align the frame (without fabric) proceed as follows:

With the frame removed lock it up with wire or whatever so that it is properly erected. Enlist the aid of two people with patience. Align the frame onto the windscreen so that rests perfectly parallel and onto the top of the screen, while ensuring it butts perfectly into the rear of the screen. Maintain this position and check where the mounting plates sit. If the original holes are still there and they line up, all's well. But remember if there is excessive play between the plates and the frame it will be magnified at the screen frame forward edge lifting away from the screen and then it's not going to seal well.

If have replaced the quarter panels, proceed as follows:

Drill one oversized hole in one panel after marking its position. Bolt up, check screen alignment then repeat on the other side. This will allow a bit of final adjustment before drilling the remaining 4 holes to the required size. Any play between the plates and the frame should be taken up at this stage. There should be little or no preload on the screen. If you cannot get to this far without the frame mounting plates running into the door aperture trim, your stanchions and screen pegs will need attention. Some adjustment to the stanchions ' location is possible without metal surgery. Small adjustments here will usually fix the problem. If it doesn't consider fitting an aeroscreen, buying goggles and forget the whole idea.

Fabric fitting:

I reckon you are lucky if a hood made in an English winter fits at all, but anyway there are two things to attend to:

1. The frame needs to be properly aligned, if not it may tend to collapse slightly when it is secured to the body and this will make the screen seal ineffective.

2. Tension, when correct the fabric should pull the frame from the screen approximately 60 mm, best done on a hot sunny day. Start by clipping the fabric onto the rear shroud retainers and pull up and over to the front of the frame and mark where the fabric and the frame meet. Now tack the fabric onto the wooden stick so that the mark is at the rear and underside of the stick. Using a couple of screws only, attach the stick to the frame, pull the assembly down onto the screen and release. If the tension is in need of adjustment, retack as required before fully securing the stick to the frame.

Overcentre clamps:

Before fitting the fabric to the remaining body attachment points, sort these little buggers out. Their condition is as critical as frame alignment. With use their "eyes" wear and as they go overcentre they allow the frame to lift up slightly from the screen and thereby destroy all the effort in getting the frame sitting correctly. You can buy new ones, but just how accurate they are I don't know. Origina1 items can be built up and then carefully filed until they fit nicely and compress the seal evenly over its entire length. It wasn't without due cause that the clamps used on later models are of modified design. After this problem is sorted, the remaining hood to body fixtures can be fitted.

DID YOU KNOW that the original hoods have steel plates in the tongue that's under where the overcentre clamps 1ocate?

Now does anyone have ideas on how to get rid of the kinks that you get on either end of the screen to shroud seal?

From. Tay Urlwin. ©

TECHNICAL REPORT

LOCKTITEING CASTINGS

At the May meeting I was speaking with Adrian Rouse about the "Loctite" process for sealing engine blocks. Adrian is restoring a mighty l00/6, (great car), and is getting on with the job a lot faster than some of us.

When chemical cleaning of cast iron is done it can sometimes open up pores in the metal thereby making the metal more porous than it may otherwise have been. A symptom of porosity is finding oil in the coolant. This may be noticed on removal of the radiator cap.

"Loctiteing" the engine block and head can remedy this problem. Using this process the microscopic porosity of the metal is filled with Loctite "Rosinal" under vacuum. Before having this process done the block and head must be very dean, all machining must be done and all studs, bolts and nuts must be removed. "Rosinal" does not leave a film on machined surfaces. Internal threads may have to be cleaned up a little during reassembly.

The parts are first placed in a large metal basket and then are passed through the 4 tubs that make up the process. These are:

1. Rosinal.
2. Wash.
3. Catalyst
4. Warm water cure.

The process is permanent. The most cost-effective way of using it would be to have everything done at the one time. Other metals and alloys can be done i.e. master and slave cylinders, alloy wheels etc. The Loctite process is also useful for sealing cast alloy parts before electroplating and prevents pitting and blistering.

An extra, is rebuilding an engine which gives you peace of mind in the long term and well worth the reasonable cost.

Loctite Aust. Pty. Ltd. is at 3 Endeavour Road, Caringbah Ph 9526 8366.

Hope your holes get sealed,

Ian Howard

June 1999

DOES YOUR HEALEY HAVE LOW OIL PRESSURE?
OR
ROCKER PROBLEMS

Courtesy of the Carolinas AHC Tech Tip Book

Does your Austin-Healey smoke? Burn oil? Have a rough idle? Have less than 15 lbs. oil pressure at idle? Have inadequate oil pressure at 60 mph? This kind of problem is so very common with the Big Healeys and it is usually diagnosed as a worn out engine. It has been known for owners to have their engines pulled, have the crank reground, the block rebored with new pistons and a valve job with new guides. The engine then runs great but it still smokes and the oil pressure is still low. That same problem is still there.

Now what?

If you have the smoking and oil pressure problem, here is a diagnosis that could save you an engine rebuild of a few thousand dollars.

Drive your car for 30+ miles to bring the oil up to operating temperature. As soon as you return to your garage, remove the valve cover before the oil cools down. With the valve cover removed, start your engine and run it at 3,000 rpm and notice the quantity of oil coming from the side of each rocker arm; an engine in good condition will only have a very small amount of oil coming from the side of the rocker arms. If you have a large amount of oil coming out of the small hole on the top center of the rocker arm, or it spurts out and makes a gusher of six inches or more, you have now found a major cause of low oil pressure and smoking in the Big Healey's.

You may want to purchase a rebuilt rocker assembly for installation. These units all have a new shaft, new bushes, and reground rocker arm faces. Hope this saves you some dollars and sense.

Lifted from Healey Torque – AHOC NZ – March 2002

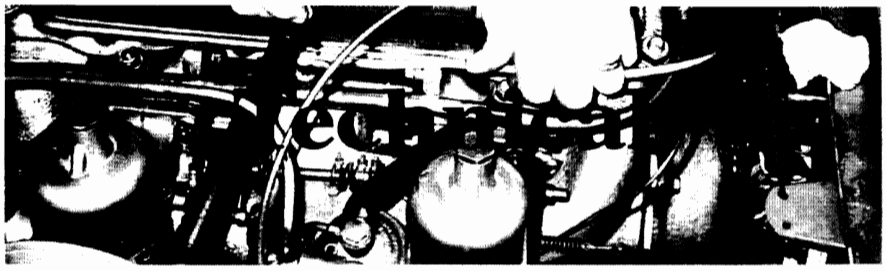

Low Oil Pressure

By Norman Nock, British Car Specialists, Stockton, Calif.

If your idle oil pressure is below 20 lbs at idle with the engine at operating temperature, you could have a problem. The first thing to check is the accuracy of the panel oil gauge. Is it giving the correct reading? Substitute another oil gauge of known quality.

If you do have low oil pressure, the oil pump could cause the problem. There are two types of oil pumps fitted to big Healeys: eccentric rotor type and gear type.

Eccentric rotor pumps: The inner rotor has one lobe less than the number of internal segments in the outer rotor as shown in Figure 1. Measure the clearances as shown in Figure 2. Inner rotor to outer rotor maximum is 0.006". Clearance when new is 0.002". Outer rotor to pump body is 0.010" maximum; 0.003" new. End float of the rotors is 0.0025" maximum to 0.0015" new.

Visually inspect the rotor and body. If there are swirl marks that can be felt with your fingernail, the pump should be replaced. Compare the old pump with a new pump by immersing both pumps in clean solvent, and turning shaft by hand. Compare the outflow of the solvent in one with the other.

Gear pumps: End float of gears is 0.0016" to 0.005". Oil pump gears, to oil pump body: 0.0005" to 0.002".

Other causes of low oil pressure: When replacing a gear type oil pump in the 100-4, inspect the oil pipe between the block and the oil pump body. This pipe is a known problem for cracks that can cause low oil pressure. A new type of pipe is available that is flexible. Also the oil pan can become damaged from road hazards, blocking the oil pickup pipe. This could cause you to lose oil pressure at high speed.

Low oil pressure can also be caused by worn rod and main bearings. Mechanics have replaced rod bearings and some main bearings, with only the oil pan removed. The front main bearing can't be removed because of the front cover bolts. The rear main if removed will damage the rear cover gasket. If the rear main bearing is worn the crankshaft will damage the rear of the engine block causing an oil leak. Seals are available to prevent oil leaks from this area.

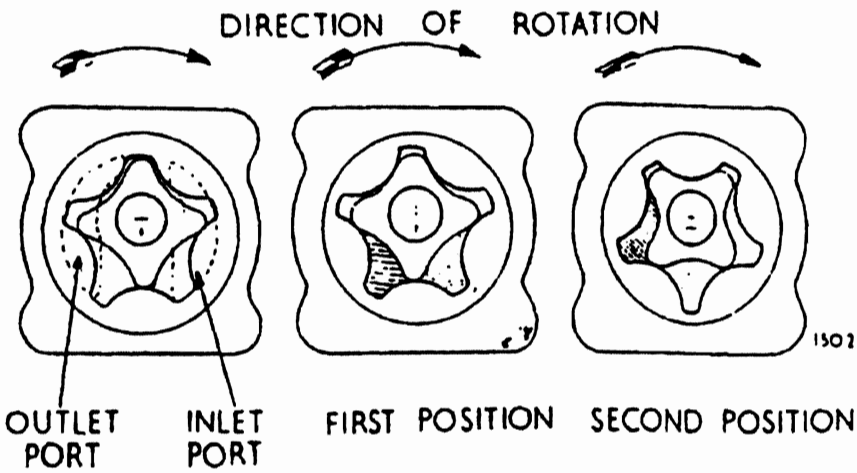

Figure 1: An eccentric rotor type oil pump has one lobe less than the number of interns segments in the outer rotor.

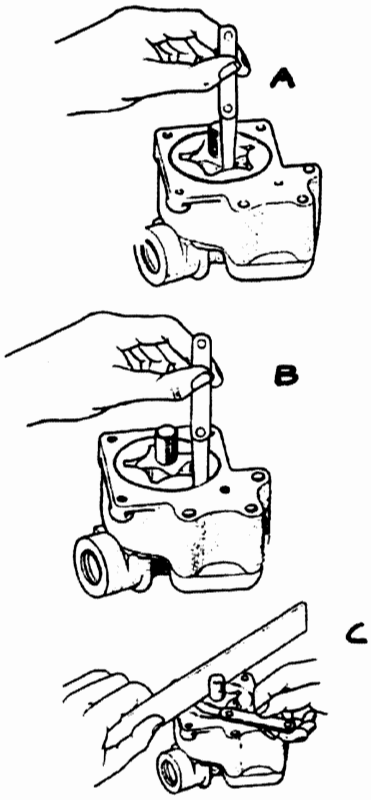

Figure 2: Typical clearances in an eccentric rotor type oil pump similar to those used in an Austin-Healey.
A. Inner rotor to outer rotor 0.006" max; 0.002 new.
B. Outer rotor to pump body 0.010" max; 0.003" new.
C. End float of rotors: 0.0025" max; 0.0015" new.

Understanding Oil Pressure

Oil pressure is created when the positive displacement oil pump sucks up oil from the pan and pushes it through the filter into the engine's main oil gallery. The oil is then routed to where it is needed: the main bearings, rod bearings, cam bearings, upper valve train and timing chain or tensioner.

The oil's viscosity makes it thick and slows the flow as it passes through the passages and bearings. The amount of pressure created thus depends on the bearing clearances as well as the oil's viscosity. Tighter clearances and/or heavier viscosity equal more pressure.

As the pressure builds up in the oil system, it has to go somewhere. A spring-loaded "pressure relief valve" opens when pressure exceeds a certain limit and reroutes oil back into the oil pan. This prevents a dangerous build-up of pressure that could rupture the oil filter or blow out pressed-in oil gallery plugs. Most relief valves are set to open when oil pressure exceeds about 50 psi.

At idle, most oil pumps do not produce enough flow to force open the relief valve. Oil pumps that are camshaft-driven only turn at half engine speed so output isn't great at idle and low rpm.

The relief valve generally only comes into play at higher rpms when the pump's output pushes more oil into the system than it can handle. Then the relief valve opens to vent oil and limit maximum oil pressure until the engine returns to idle or a lower rpm.

Types of Oil Pumps

Twin gear pumps, also called "external" pumps, use a pair of inter-meshing gears to pump oil. One gear is driven by a shaft and the second gear is driven by the first gear. The pump is usually driven by a shaft that connects to the camshaft. Thus, the pump operates at half engine rpm. The pump gears turn in opposite directions. This traps oil between the gear teeth and carries it around the outside of each gear from the pickup tube inlet to the pump outlet. The right clearances between the gears prevent the oil from flowing backwards to the inlet.

Rotor pumps, also called "gerotor" pumps, have an inner gear that turns inside an outer rotor. The inner gear has one less lobe than the outer rotor.

The inner gear is also mounted slightly off-center to the outer rotor which forces the outer rotor to spin at about 80 percent of the speed of the inner gear. This creates a bellows-like pumping action that pulls oil from the inlet port and pushes it toward the outlet port. Close tolerances are required for good pumping efficiency.

Twin Gear Pump

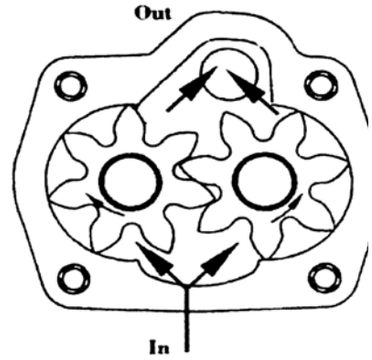

Spring Loaded Pressure Relief Valve

Wire Wheel Safety Check for Sports Cars

A bit of history from British Car Specialists' files: Technical Serv Bulletin from British Leyland.

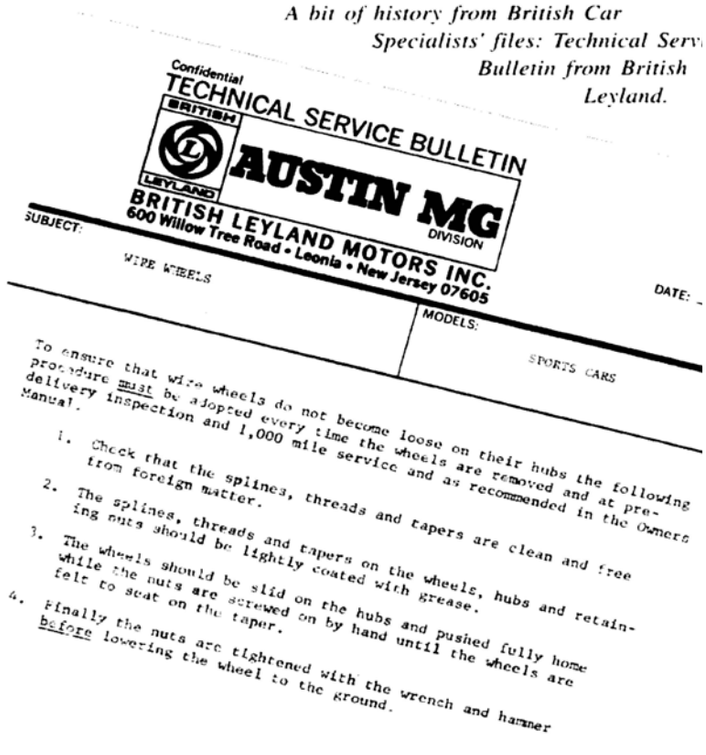

Confidential

TECHNICAL SERVICE BULLETIN

BRITISH LEYLAND

AUSTIN MG DIVISION

BRITISH LEYLAND MOTORS INC.
600 Willow Tree Road • Leonia • New Jersey 07605

SUBJECT: WIRE WHEELS

MODELS: SPORTS CARS

DATE:

To ensure that wire wheels do not become loose on their hubs the following procedure must be adopted every time the wheels are removed and at pre-delivery inspection and 1,000 mile service and as recommended in the Owners Manual.

1. Check that the splines, threads and tapers are clean and free from foreign matter.
2. The splines, threads and tapers on the wheels, hubs and retaining nuts should be lightly coated with grease.
3. The wheels should be slid on the hubs and pushed fully home while the nuts are screwed on by hand until the wheels are felt to seat on the taper.
4. Finally the nuts are tightened with the wrench and hammer before lowering the wheel to the ground.

Article supplied by Norman Nock British Car Specialists Stockton Calif. USA

REAL HEALEY NATTER
LOWER OUTER PIN GREASING

A problem came up during my last 'Greasy-Oilchange'. Grease would only come out of one of the lower wishbone outer fulcrum bushes, on the driver's side, and it was the one without the grease nipple. The offending one was removed and found to be full of old dry grease, any grease pumped in had been taking the path of least resistance through the hole in fulcrum pin and lubricating the other side only. After cleaning and reassembly, the grease flowed as it should out of both bushes.

This problem had previously occurred and was fixed on my predecessor (A Mk 111 Sprite) and the same modification was carried out on both sides of my front suspension to stop any chance of it happening again.

The blank ended bush was removed, a hole drilled and tapped, a grease nipple fitted and a brass plug driven into the hole through the fulcrum pin, then everything reassembled. There are now two more greasing points, but it is certain that each bush will get it's share.

This can be done without dismantling the whole suspension. Just jack up, remove the wheel, loosen the bush's cotter pin and unscrew the bush. The fulcrum pin may not remain in the centre of the hole in the wishbone, if this happens loosen the three nuts on shock arms, the four on the bottom spring plate (LOOSEN ONLY - DO NOT REMOVE!!) and you should be able to lever things around to centre it and screw the modified bush back on. Don't forget to tighten everything up again.

DMH-000
(THE HARDIE'S 100-4)

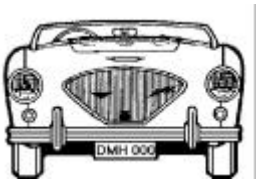

P.S. It's good to see CB-4444 (El Presidentee's Four) mobile again after it's extensive (and expensive?) engine rebuild.

PASSENGER CAR

No. X692
(3rd REVISION)

AUSTIN
AUSTIN-HEALEY 100

ITEM	APPLICATION	GRADE	MILEAGE	REMARKS
	All capacities are refill quantities.			
1	Engine (11¾ pints) (13 pints with oil filter drained) — Summer	SHELL X-100 30 or SHELL X-100 MULTIGRADE 10W/30	Daily 3,000* 30,000	Top up if necessary Drain, flush and refill Remove sump and strainer gauze, wash in petrol, dry, replace
	Engine — Winter	SHELL X-100 20W or SHELL X-100 MULTIGRADE 10W/30		
2	Gearbox and Overdrive (4½ pints)	SHELL X-100 30	1,000 6,000*	Top up if necessary Drain, flush and refill (2 drain plugs)
3	Rear Axle (2¾ pints)			
	—From Chassis No. BN221536	SHELL SPIRAX 90 EP	1,000	Top up if necessary
	—Others	SHELL SPIRAX 140 EP	6,000*	Drain, flush and refill
4	Suspension			
	—Front—Control Arms —Rear —Spring Shackles	SHELL RETINAX A or SHELL SPIRAX 140 EP	1,000	Gun {2 fittings, 2 fittings}
5	Steering—Drag —Swivel Pins —Track Rods —Track Rod Pivot	SHELL RETINAX A or SHELL SPIRAX 140 EP	1,000	Gun {2 fittings, 4 fittings, 4 fittings, 1 fitting}
6	Clutch Operating Shaft and Brake Clutch Pedal Pivot	SHELL RETINAX A or SHELL SPIRAX 140 EP	9,000	Gun—1 fitting
7	Propeller Shaft—Spline —Universal Joints	SHELL RETINAX A or SHELL SPIRAX 140 EP	1,000	Gun {1 fitting, 2 fittings}
8	Handbrake—Balance Lever —Lever Pivot	SHELL RETINAX A or SHELL SPIRAX 140 EP	1,000	Gun {1 fitting, 1 fitting}
9	—Rod Linkage	SHELL X-100 20W	1,000	Oil can—few drops
10	Wheel Bearings—Front	SHELL RETINAX A	6,000	Remove cap, clean, repack, replace
11	Shock Absorbers—Front and Rear	SHELL X-100 MULTIGRADE 10W/30	6,000	Top up if necessary
12	Oil Filter	—	9,000	Drain, clean, renew element, refill
13	Air Cleaner—Oil Wetted Type	AS FOR ENGINE	1,000	Remove element, wash in petrol, dry, dip in oil, drain, replace
14	Dynamo	SHELL RETINAX A	6,000	Remove cap, repack, replace
15	Water Pump	SHELL SPIRAX 140 EP	1,000	Remove plug, lubricate sparingly, replace plug
16	Distributor			
	—Automatic Timing Control —Cam Bearing —Cam and Contact Breaker Pivot	SHELL X-100 20W	1,000	{Oil can—few drops, Oil can—few drops, Smear}
17	Carburetter Linkage	SHELL X-100 20W	1,000	Oil can—few drops
18	Speedometer Drive Inner Cable	SHELL RETINAX A	9,000	Remove, smear lightly, replace
19	Steering Gearbox	SHELL SPIRAX 90 EP	1,000	Top up to level of filler plug
20	Brake Fluid Supply Tank	—	1,000	Top up if necessary with recommended brake fluid

*Initially after first 500

All chassis points should be serviced more frequently when operating under arduous or in dusty conditions.

(*continued overleaf*)

SERVICE PERIOD SUMMARY

FREQUENCY	ITEMS REQUIRING ATTENTION
Daily	1
1,000 miles	2–3–4–5–7–8–9–13–15–16–17–19–20
3,000 miles	1
6,000 miles	2–3–10–11–14
9,000 miles	6–12–18
30,000 miles	1

TYRES

SIZE	PRESSURES (lb. sq. in.) Front	Rear
5.90 × 15	20	23

ENGINE ADJUSTMENTS

Valve Clearances (cold)
Inlet and Exhaust..... ·012″
Contact Breaker
Points Gap ..... ·014″—·016″
Spark Plug Gap ..... ·025″

APPROXIMATE CAPACITIES
(Imperial measure)

Cooling System.....20 pints
Drain Taps. 1. Bottom radiator tank.
2. Right side of cylinder block.
Fuel Tank.....12 galls.

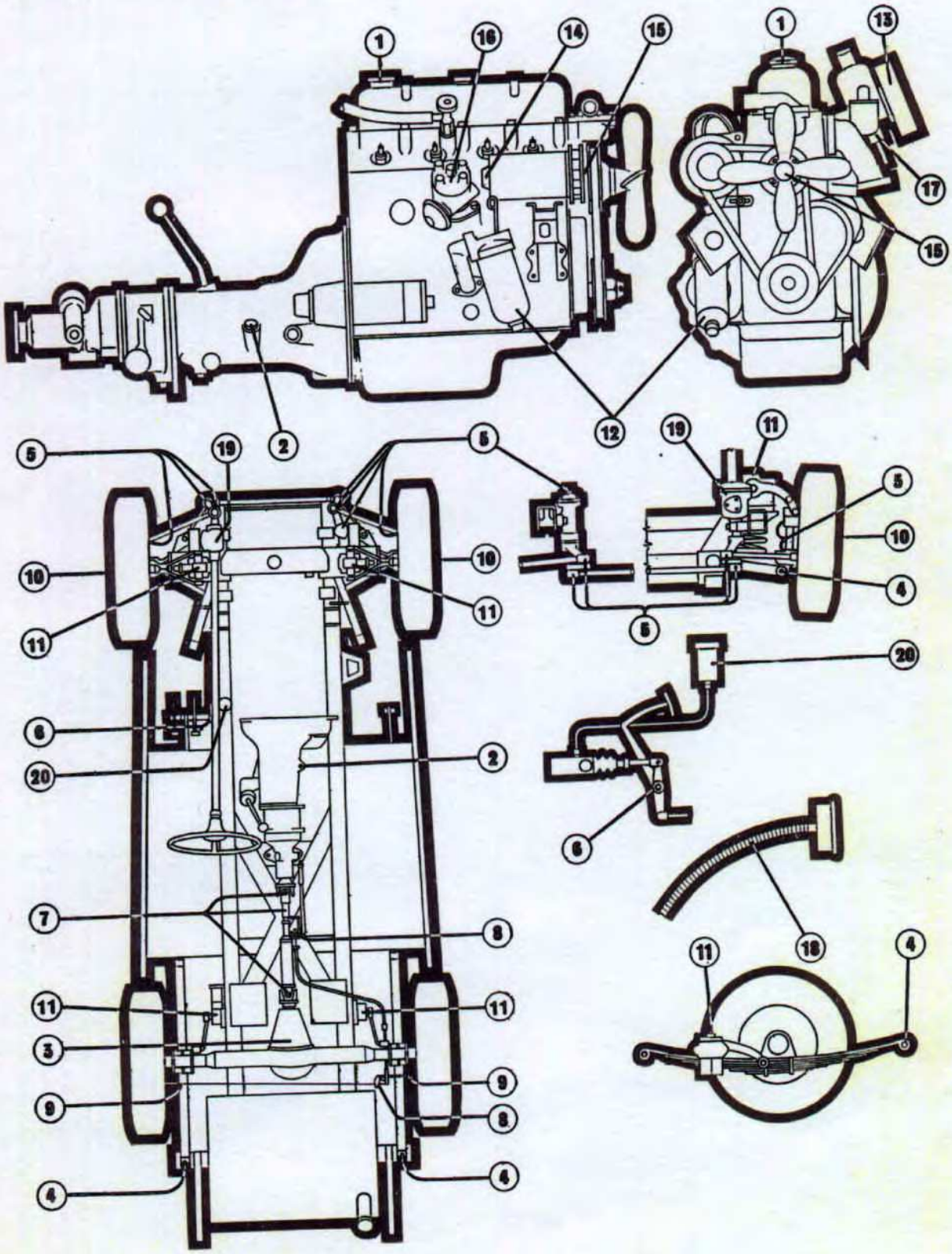

JOHN HARPER'S ARTICLES
No 6
DECEMBER 1990

Lucas Date Codes

I am sure that many owners are aware of what I am about to explain below, but judging by many of the queries I have received, not all. The details of the codes used by Lucas varied over the years but were the same for the production life of the 1 00. The code consists of two sections and is stamped or engraved on all major units. The first number is the month of manufacture in the range 1 to 12 i.e. 1 = January 12 = December. The second is the year of manufacture but only shows the last two digits e.g. 54 is 1954. An example would be 11 54 which translates to November 1954.

An actual unit originally fitted to your 100 may have a date code one, two or very occasionally three months prior to the car's date of manufacture. The major electrical components would appear to have taken this length of time to be transported and fitted to a completed car. The date code is a good way of checking for originality. It is also possible to judge the build date of a 100 from its electrical units where this cannot be obtained from the identity numbers and a BMIHT document. The date code is sometimes important when servicing or setting up units as for example later control boxes and dynamos had modified voltage settings where knowing the date of manufacture is important.

{Further information not in the original publication - Lucas changed their coding system from the 1 January 1969 to week and year. For example 0769 would indicate the seventh week in 1969.)

Lucas Electrics

The Lucas motto: *“Get home before dark”*

Lucas denies having invented darkness but lays a claim to *sudden, unexpected darkness.*

Lucas: - The inventor of the first intermittent wiper. (Now it goes, now it doesn't...)

Lucas: - The inventor of the self-dimming headlight switch.

Happy Customer: -*“I've had a Lucas pacemaker for years & I've never had any prob....”*

If Lucas made guns, wars wouldn't start either.

It's not true that Lucas, in 1947, got Parliament to repeal Ohm's law,
they withdrew their efforts when they met too much resistance.

Quality Assurance phoned and advised the Engineering guy that they had trouble with his design shorting out. So he made the wires longer.

Why do the English drink warm beer? Lucas made refrigerators too.

Did you hear the one about the guy who peeked into a Rover and asked the owner "How can you tell one switch from another at night, since they all look the same?" He replied, "It doesn't matter which one you use, nothing happens!"

Alexander Graham Bell invented the telephone. Thomas Edison invented the light bulb.
Joseph Lucas invented the short circuit.

SECTION K-4
ISSUE 1, APRIL 1953

LUCAS

Quality

EQUIPMENT

VOLUME 2

WORKSHOP INSTRUCTIONS

HORNS

MODELS HF1746-47-48

JOSEPH LUCAS LTD · BIRMINGHAM 19 · ENGLAND

Printed in England

HORNS

MODELS HF1746-47-48

GENERAL

These horns are of the high frequency type and their construction and method of operation is as follows:—The vibrating armature is coupled to a flexible diaphragm and to a rigid tone disc. The diaphragm vibrates at a relatively low frequency (280-360 cps.) and the impact of the armature on the core face sets the tone disc into vibration, at a high frequency determined by its size and the rigidity of its material. These two sets of vibrations combine, together with their various overtones, to give the horn its characteristic note.

The horn operates electrically on the same principle as the electric bell, i.e., when the horn push is pressed, current flows through the coil windings and causes the core to be magnetized, whereupon the armature is pulled downwards and impacts on the core face. The contact breaker opens each time the armature is pulled down to the core, de-energising the magnet system and causing the cycle to be repeated at a frequency determined by the characteristics of the diaphragm.

To prevent sparking and consequent wear of the contacts, a condenser is connected across the contact breaker circuit.

SERVICING SUMMARY.

Symptoms	*Possible Causes*	*Reference*
Note unsatisfactory or operation intermittent.	(i) Horns loose on mounting.	Para. 1
	(ii) Faulty wiring.	Para. 2
	(iii) Horn out of adjustment.	Para. 3
	(iv) Internal fault: (*a*) Misalignment of armature and core faces. (*b*) Incorrect armature-to-core air gap setting. (*c*) Worn contact set.	Para. 4
Horns fail to operate.	(i) Faulty wiring.	Para. 2
	(ii) Horn out of adjustment.	Para. 3
	(iii) Internal fault: (*d*) Faulty condenser. (*e*) Faulty coil.	Para. 4

SERVICING

Before making any adjustments to the horn, make certain that the battery is in a good state of charge. These high output horns will not sound correctly unless they are securely clamped in a vice or other heavy fixture while they are being tested.

Do not dismantle the horn until the external checks and adjustments have been made.

Dismantling and re-assembling procedure is given in Para. 5.

1. HORN MOUNTING

The bolts securing the horn bracket must be tight and the body of the horn must not foul any other fixture. Check that any units fitted near the horns are rigidly mounted and do not vibrate when the horn is operated.

2. WIRING

Examine the cables of the horn circuit, and renew any that are worn or chafed. All connections must be clean and tight and connecting eyelets and ferrules making good contact with the cables. Complete failure of the horns can be caused by a blown fuse. If the fuse has blown, examine the wiring and horns for evidence of a short circuit. Check also associated circuits protected by the same fuse. A horn badly out of adjustment and taking excessive current may cause the fuse to burn out.

3. HORN ADJUSTMENT

Check the voltage at the horn with the horn blowing. A clear 'High Frequency' note should be heard over the following voltage ranges:—

6 volt	...	...	4—8 volts
12 volt	...	...	10—16 volts
24 volt	...	...	20—28 volts

Adjustment will not alter the tone of the horn. It merely takes up wear of the moving parts, which if not corrected, will result in loss of power and roughness of tone. Before making an adjustment, connect an ammeter (0—10 amps. scale) in series with the horn.

The current consumption should be:—

6 volt model	...	5 amps.
12 volt model	...	4 amps.
24 volt model	...	3 amps.

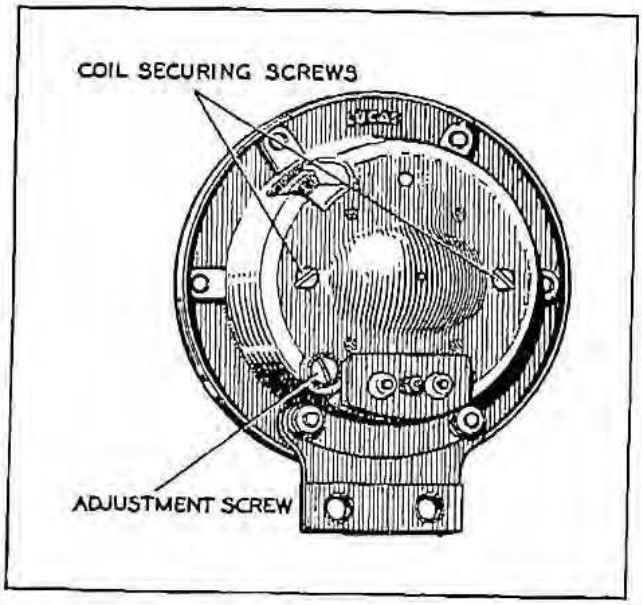

Fig. 1.
Rear view of horn showing adjustment screw.

If necessary, connect the horn to a battery of appropriate voltage and adjust as follows:—

Turn the adjustment screw (Fig. 1) not more than 3 notches in an anti-clockwise direction to reduce the current. Check horn performance. Repeat adjustment until the best performance is obtained with approximately the current consumption quoted above.

4. INTERNAL FAULTS

(a) Mis-alignment of Armature and Core Faces.

To check and reset the alignment of the armature and core faces:—

Remove the cover nut and tone disc. Turn the contact breaker adjusting screw several turns in a clockwise direction, so that the contacts remain closed when the armature is pulled flat against the core face.

Loosen the cone nut, and energise the coil from a battery of correct voltage.

Tighten the cone nut while the armature is pulled flat against the core face.

Replace the tone disc and cover nut.

Whilst energising the horn, turn the adjustment screw anti-clockwise until the correct horn note and current consumption is obtained.

NOTE: Do not energise the coil for longer than a few seconds while the contact breaker is rendered inoperative (i.e., is not operated by the armature movement). If a continuous current is allowed to flow through the coil for long periods the coil may be damaged.

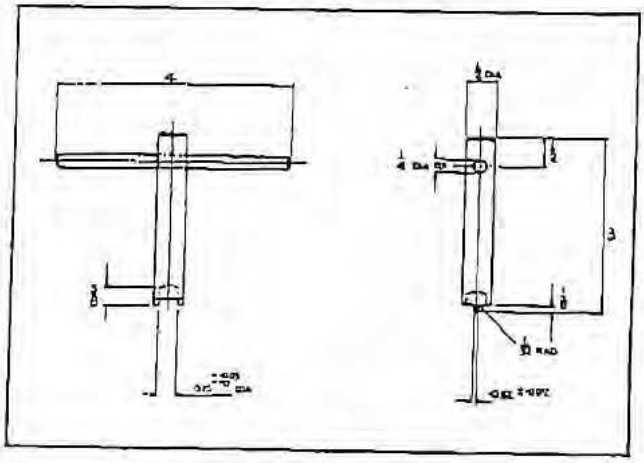

Fig. 2.
Tool for adjusting air gap setting.
(Measurements in inches)

(b) Incorrect Armature-to-Core Air Gap Setting.

Before the air gap setting can be checked, remove the cover nut and tone disc. Ensure that the cone nut and sleeve lock nut are tight, then proceed as follows:

Turn the adjustment screw several turns clockwise so that the contacts will remain closed when the armature is pulled against the core face. Measure the movement of the armature by mounting a clock indicator gauge to bear on the armature sleeve and momentarily energising the coil. The correct air gap settings are:—

6 volt model	High Note	0.019 ins.—0.022 ins.
	Low Note	0.019 ins.—0.022 ins.
12 volt model	High Note	0.019 ins.—0.022 ins.
	Low Note	0.024 ins.—0.026 ins.
24 volt model	High Note	0.019 ins.—0.022 ins.
	Low Note	0.024 ins.—0.026 ins.

If the air gap setting is incorrect, loosen the cone nut and sleeve lock nut. Turn the adjusting sleeve in a **clockwise** direction to **reduce** the gap, **anti-clockwise** to **increase** the gap. Use the tool shown in Fig. 2 to make this adjustment.

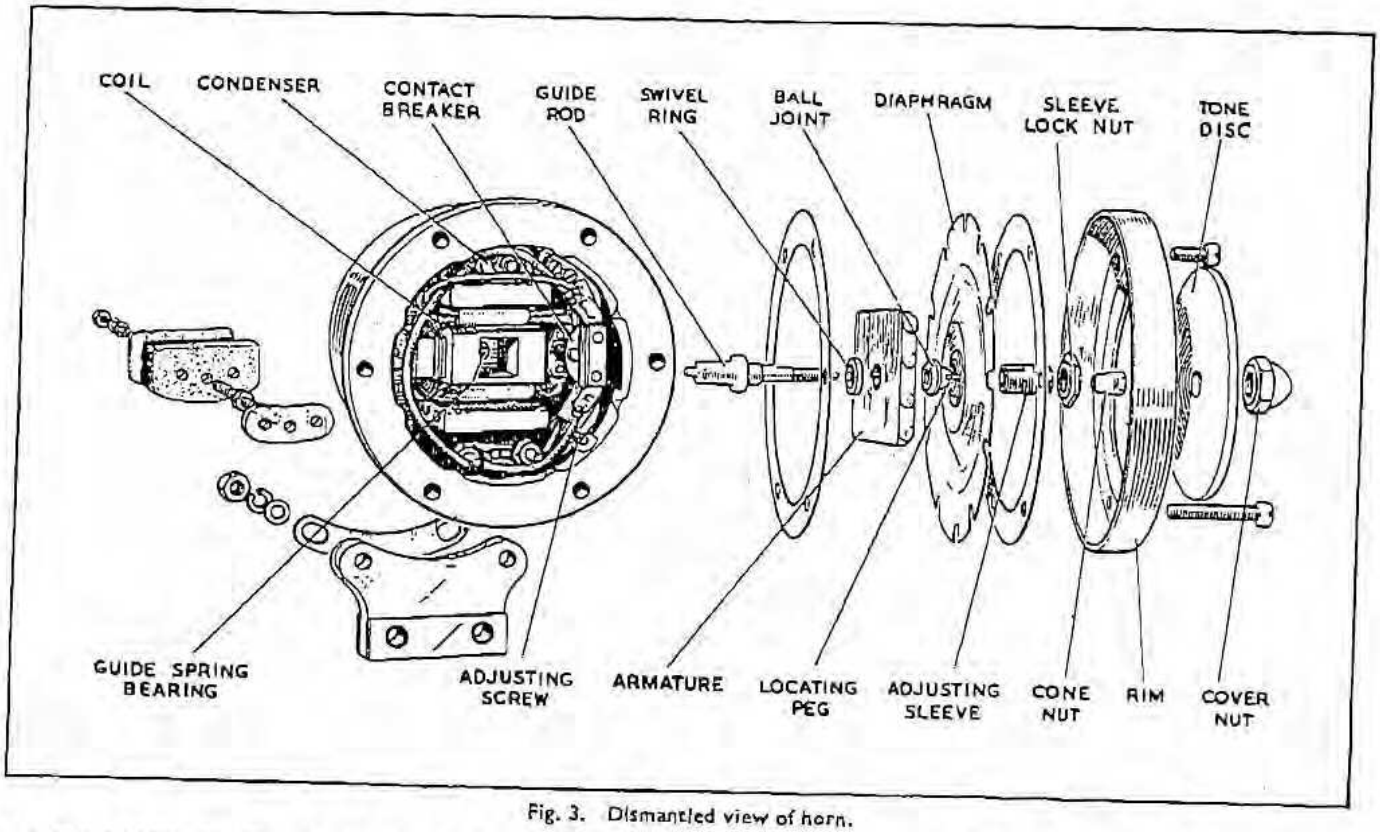

Fig. 3. Dismantled view of horn.

Lightly tighten the sleeve lock nut. Energise the coil, and tighten the cone nut. **Never** tighten the cone nut before the sleeve lock nut or the diaphragm locating peg may shear.

Then recheck the gap with the clock indicator gauge as described above and, if the air gap is still incorrect, repeat this procedure until satisfactory.

Replace the tone disc and tighten the cover nut. Adjust horn adjustment screw until correct note and current consumption is obtained.

(c) Worn Contact Set.

If the contact breaker points are badly worn the operation of the horn may be intermittent and a new contact set must be fitted. If the contacts are badly pitted (this might be caused by a faulty condenser) they can cause an open circuit and complete failure of the horn. The pressure required at the end of the contact spring to just open the contacts, must not be more than 50 ozs. and not less than 42 ozs. If the spring pressure is outside these limits, it is necessary to fit a new contact set.

(d) Faulty Condenser

Should the horn 'click' when energised, but not produce a note, turn the adjustment screw anti-clockwise. If the horn still does not sound when the head of the screw disengages from the serrations in the body then the condenser may be short circuited internally. Remove cover nut, tone disc and securing rim, and withdraw the diaphragm assembly. The condenser may now be checked with a 500 volt megger. Disconnect the lead from the condenser terminal, and connect the megger between the condenser terminal and case. The megger reading should not be less then 3 megohms. Replace condenser if faulty, reassemble horn and adjust for correct note and normal current consumption.

(e) Faulty Coil.

If, after checking the contact breaker as in (c) above, there is still an open circuit in the horn, the coil continuity must be checked. To do this, connect an ohmeter across the supply terminals with the contact breaker points closed. The correct coil resistance should be:—

6 volt model	...	0.22—0.26 ohms
12 volt model	...	0.70—0.75 ohms
24 volt model	...	2.0 —2.4 ohms

If the readings do not compare favourably with these figures the coil must be replaced. Reassemble the horn, and adjust for normal current.

5. DISMANTLING AND RE-ASSEMBLY PROCEDURE

A partly dismantled horn is shown in Fig. 3 and the sequence of removal operations is laid down in Fig. 4.

Do not bend the guide spring more than is necessary, or the spring steel may be damaged.

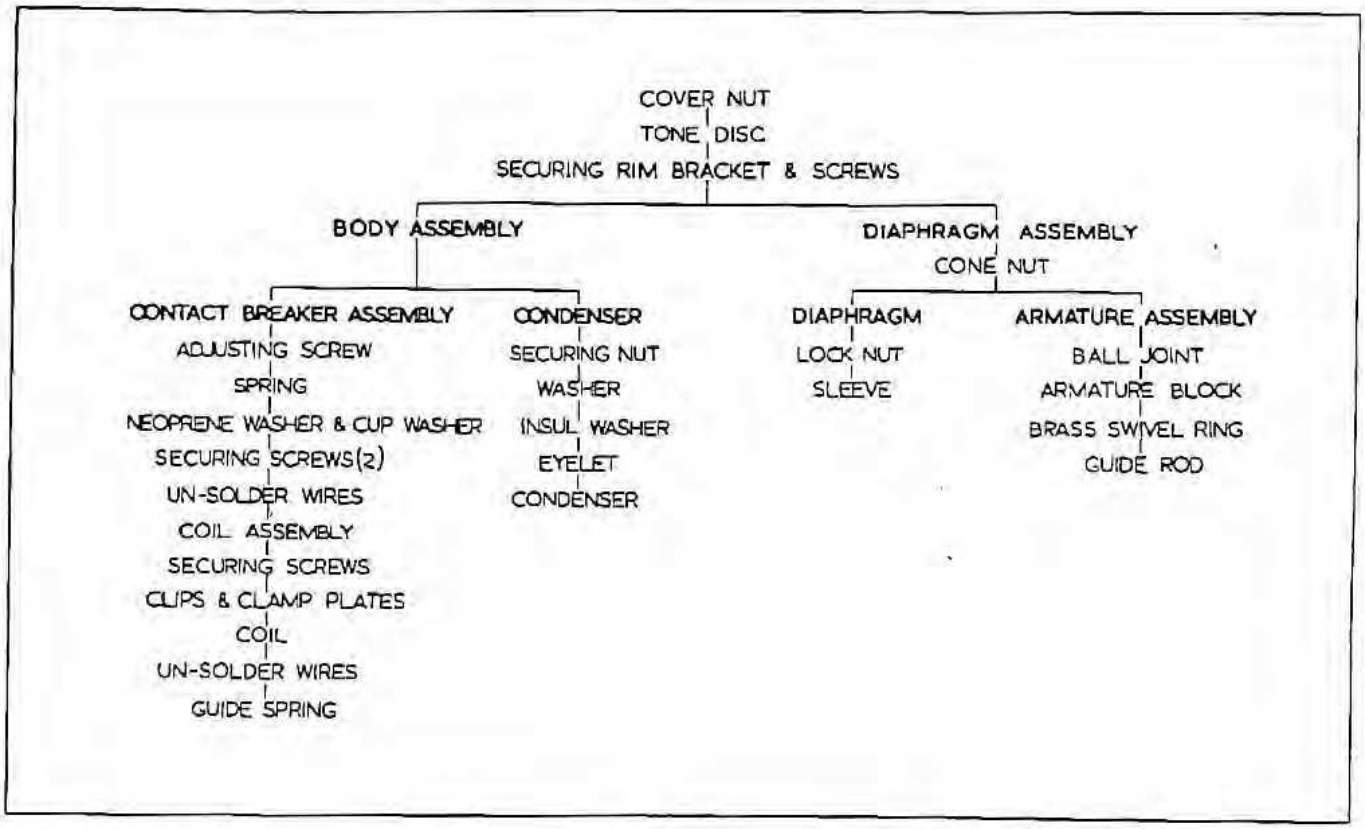

Fig. 4.
Sequence of dismantling and reassembly.

The assembly procedure is a reversal of the dismantling operation. The following points must be observed when the horn is being assembled:—

(a) Before tightening the screws securing the coil assembly, the guide spring bearing must be centralised in the horn body. Place the centralising jig (Figs. 5 & 6) over the horn body, with the central peg located in the guide spring bearing, and tighten the coil securing screws. Make sure that the coil clamping plates are square to the windings, and that the coil is firmly clamped around the former and not moveable by hand.

(b) To avoid short circuits due to chafing of cable insulation through vibration, the cables from the coil, contact breaker and condenser must be coiled smoothly to follow the curve of the body, but not to touch it.

(c) All operating surfaces of the ball joint, guide rod tip and guide spring bearing must be thinly coated with Duckham's H.B.B. grease.

(d) When building-up the diaphragm assembly, leave the cone nut and sleeve lock nut loose until the securing rim has been replaced and the horn is ready for setting.

(e) After the horn has been completely assembled and tested, it is advisable to paint over scratched parts. This will prevent rust attacking the horn

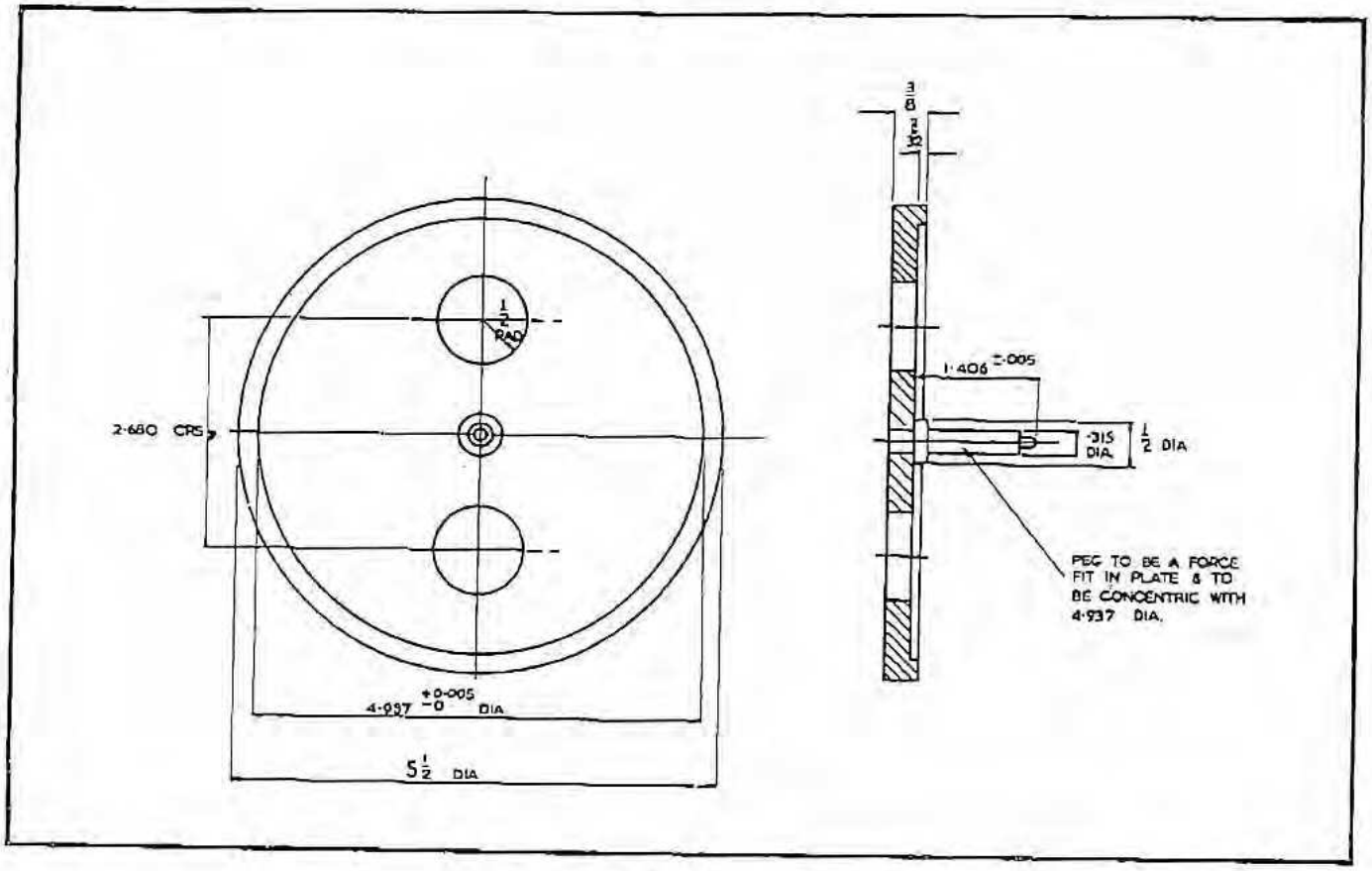

Fig. 5.
Plan view of centralising jig.
(Measurements in inches).

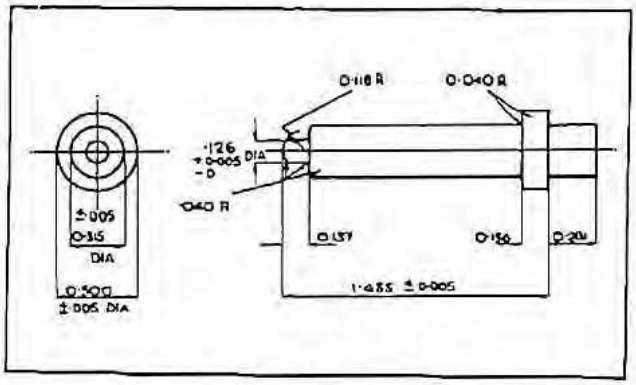

Fig. 6.
Details of peg for centralising jig.
(Measurements in inches).

The air gap adjusting tool (Fig. 2) and centralising jig (Figs. 5 and 6) must be made under local arrangements. The correct material for both tools is mild steel, case hardened.

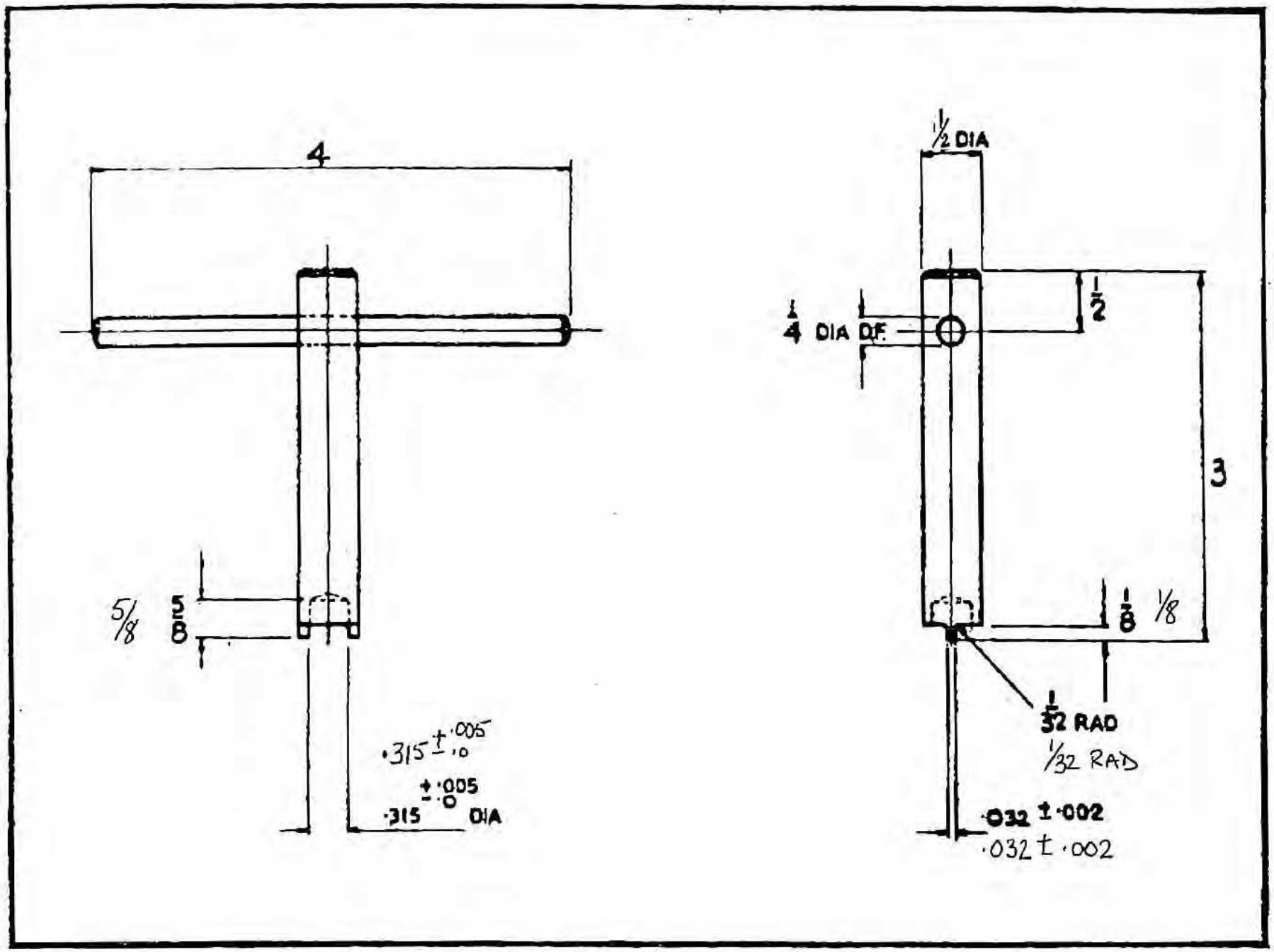

Fig. 2.

Tool for adjusting air gap setting.

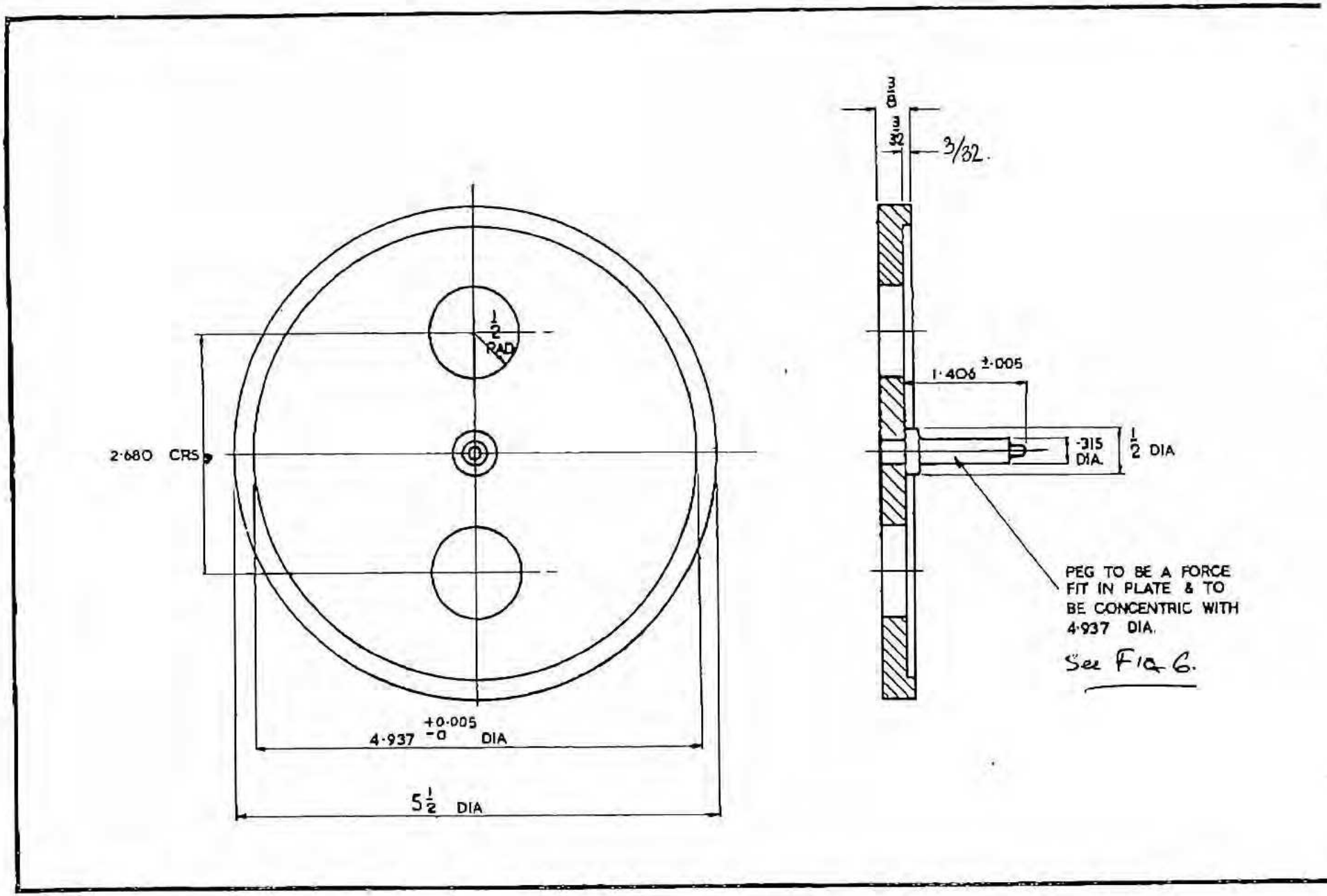

Fig. 5.
Plan view of centralising jig.
(Measurements in inches).

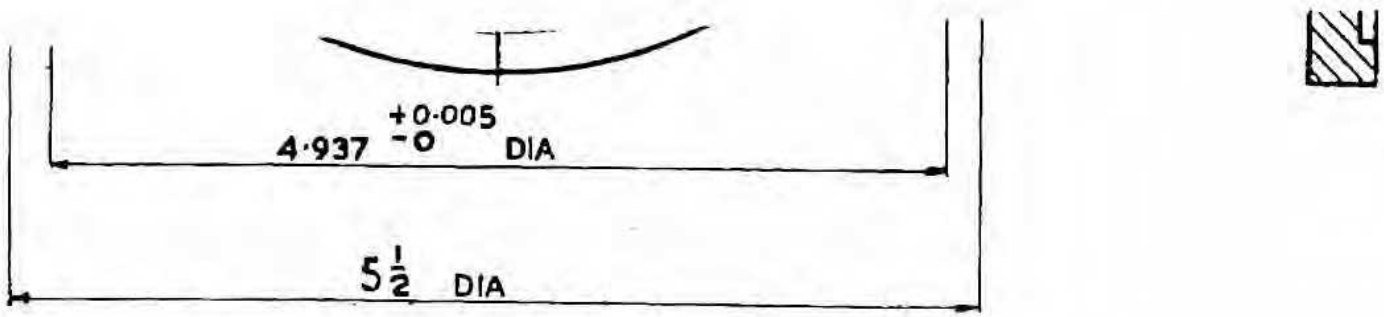

Fig. 5.
Plan view of centralising jig.
(Measurements in inches).

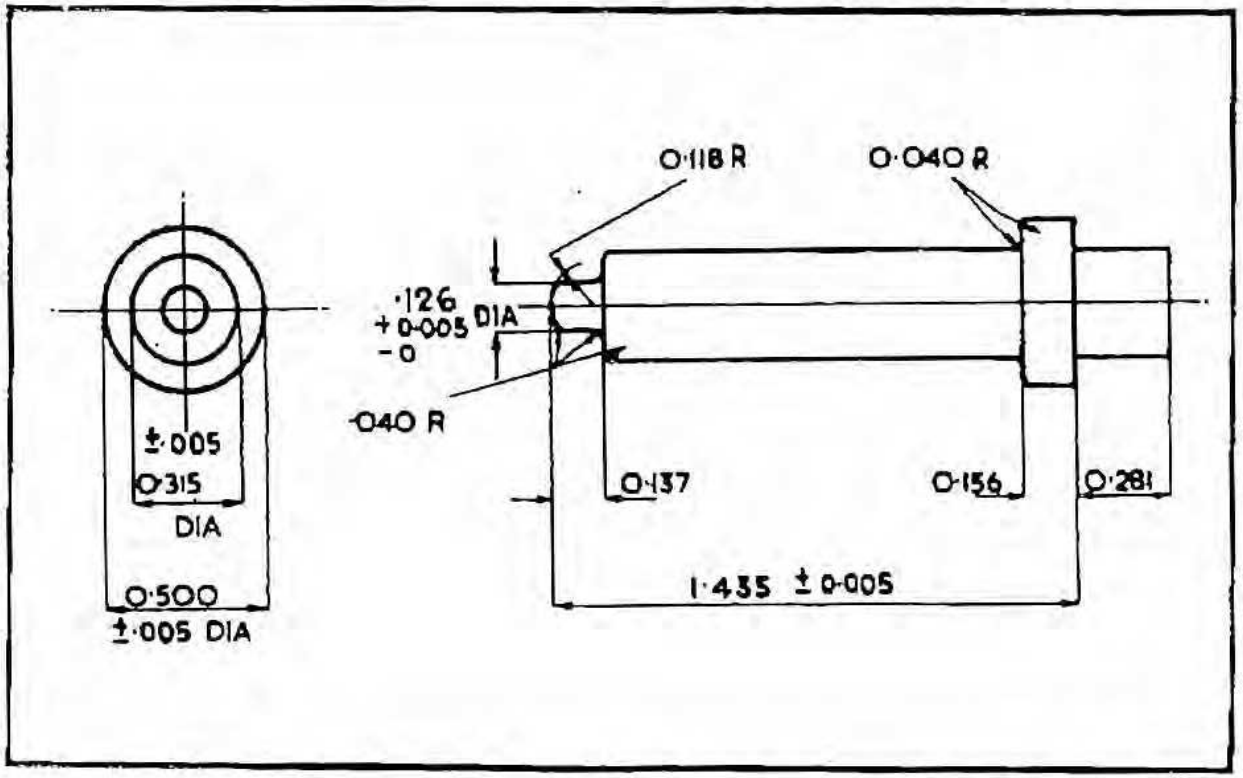

Fig. 6. Details of Peg of Centralising jig

INTERNET DOWNLOAD

LUCAS PART NUMBERS

FOR AUSTIN-HEALEY ROADSTERS

DISTRIBUTORS & IGNITION COILS MAKE AND MODEL	YEAR	DIS-TRIB-UTOR	CAP	CON-DENSER	BRUSH AND SPRING	ROTOR ARM	SHAFT AND ACTION PLATE	CON-TACT SET	DRIVING DOG OR GEAR	C.B. BASE	CAM	AUTO ADVANCE SPRING SET	TOGGLE
Austin-Healey	1954-56	40320	418865	420302	418856	400051	419668	420196	410601	418650	496076	416155	418707
Austin-Healey	1957	40532	418861	[illegible]	418856	418726	421321	420197		419980	496074	421851	418707
Austin-Healey	1958	40581	418861	[illegible]	418856	418726	419913	420197		419980	496074	421616	418707
Austin-Healey	1959-60	40662	418861	[illegible]	418856	418726	419913	420197		419980	496074	421616	418707
Austin-Healey Sprite	1958-60	40561	422905	423267	418856	400051	421065	423153	410601	422318	496076	424875	418707
Sprite MK II	1961-62	40752	422905	423871	418856	400051	54410290	423153	420620	422318	491069	54414060	

DISTRIBUTORS & IGNITION COILS MAKE AND MODEL	WEIGHT	SUNDRY PARTS SET	TOP BEARING OR BUSHING	BUSHING	LEVER OR FIXING PLATE	VACUUM CONTROL UNIT	MICRO HOUS-ING	MICRO ADJUST-ING NUT	MICRO DETAILS SET	IGNI-TION COIL	NUT
Austin-Healey	418321	419644		419430	421191	420006				45012	408120
Austin-Healey	418321	419645			421191	421189				45054	408120
Austin-Healey	418321	419645			421191	421189				45054	408120
Austin-Healey	418321	419645			421191	421189				45075	408120
Austin-Healey Sprite	418321	419644		419430	421191	421955				45053	408120
Sprite MK II	422353	419644		421998	421191	54418100				45111	408120

GENERATORS & REGULATORS MAKE AND MODEL	YEAR	GEN-ERATOR	BRUSH SET	C.B. BRACKET	BUSHES OR BEARING	OILER	BRUSH SPRING SET	O.E. BEARING
Austin Healey Sprite	1958 -on	22700	227541	54211125	227818	54211097	227542	189307
Austin Healey Sprite MKII	1962 -on	22744	227541	54214584	227818	239367	227542	189307
Austin Healey 100	1954	22519	54212267	54210082	238567	238367	54210091	189308
Austin Healey 100	1954-59	22483	238061	239264	239263	239368	238082	189308
Austin Healey 100S	1956	22489	54212267	54210057	239263	239368	54210091	189308
Austin Healey 3000	1960-61	22530	54212267	54211094	239263	239368	54210091	189308

GENERATORS & REGULATORS MAKE AND MODEL	SHAFT NUT	ARMATURE	D.E. BRACKET	TERMINAL OR LUCAR CONNECTOR	FIELD COILS	SUNDRY PARTS SET	REGULATOR
Austin Healey Sprite	198800	54214537	54211095	54211890	227543	54211894	37182
Austin Healey Sprite MKII	198800	54215042	54211095	54211890	227543	54211894	37290
Austin Healey 100	180620	239428	239012	227625	238820	239024	37183
Austin Healey 100	180620	239428	239012	227625	238820	239024	37183
Austin Healey 100S	180620	239428	239012	227625	238820	239024	37183
Austin Healey 3000	180620	239428	239012	54210464	238820	239024	37183

STARTERS & STARTER SWITCHES

MAKE AND MODEL	YEAR	STARTER	BRUSH SET	CE BRKT	BRG BUSH	CONTROL NUT OR SLEEVE	BRUSH SPRING SET	SHAFT NUT OR COLLAR	MAIN SPRING	RUBBER SLEEVE	PINION	DRIVE ASSEMBLY
Austin-Healey	1954-60	25521	255659	256748	255491		270004	255851	270889		255649	
Austin-Healey Sprite	1958-59	25022M	251108	251104	250626	250716	251942	291969	250404		250698	
Sprite MK II	1960-62	25022R	251108	251935	251477	250696	251942	291969	250404		54252212	

STARTERS & STARTER SWITCHES

MAKE AND MODEL	PINION RETURN SPRING	CLUTCH PLATES	FIELD COILS	D.E. BRKT	BRG. BUSH	INTER BRKT.	BRG. BUSH	ARMATURE	SUNDRIES KIT	SWITCH OR SOLENOID	COUPLING
Austin-Healey	255728		256578	256495	270038			255463	256762	76445	
Austin-Healey Sprite	250691		251089	250412	250678			54250096	256762	76701	764428
Sprite MK II			251089	250412	250678			54250096	256762	76701	764428

HEADLAMPS

MAKE AND MODEL	YEAR	HEAD-LAMP	RIM OR DOOR	RIM FIXING SCREW OR CATCH	DUST EXCLUDER	LIGHT UNIT RETAINING PLATE	LIGHT UNIT	BULB-HOLDER or ADAPTOR BACK-SHELL	RUBBER GASKET	BULB
Austin Healey	1954-56	51509	554440	198898	552906	554872	555447	553724	554280	355
Austin Healey	1957-59	51957	556234	198898	552906	554872	555447	553738	554280	355
Austin Healey	1960-61	58569	54520673	198898		554179		553738	554178	
Austin Healey	1962	58776	54520673	198893		54520549		553738	54521487	
Austin Healey Sprite	1959	51533	554439	198898	552906	554872	555447	553724	554279	355
Austin Healey Sprite	1960	58563	54520651	198898		554179		553738	554227	
Sprite MK II	1961-62	58775	554440	198898		54520549		553738	54521487	

FRONT & REAR FLASHER LAMPS SUNDRY LAMPS

MAKE AND MODEL	YEAR	REAR FLASHER			FRONT FLASHER			TRUNK	PANEL	MAP OR ROOF
		LAMP	LENS	RIM	LAMP	LENS	RIM			
Austin Healey-100	1954	See Stop			See Side					
Austin Healey	1955	See Stop			See Side					
Austin Healey	1956	See Stop			See Side					
"100-6" "3000"	1957-60	See Stop			See Side					
Austin Healey Sprite	1959-60	53600	576109	572734	See Side					
Sprite MK II	1961-62	See Stop	54572490		See Side					

PARKING & FLASHER LAMPS

MAKE AND MODEL	YEAR	LEFT HAND	RIGHT HAND	RIM OR DOOR	RIM FIXING SCREWS	LENS
Austin Healey	1954-55	52162	52162	572734		572715
Austin Healey	1956	*52240	*52240	572734		572715
Austin Healey	1957-60	*52338	*52338	572734		576983

PARKING & FLASHER LAMPS

MAKE AND MODEL	LENS FIXING SPRINGS	RUBBER BEAD OR GASKET	INTERIOR	BODY	SEATING BASE	BULB
Austin Healey			552101	575003		380
Austin Healey			552101	572728		380
Austin Healey			552101	576105		380
Austin Healey Sprite			552101	576105		380
Sprite MK II		576288	573828			380

LICENSE PLATE LAMPS REFLEX REFLECTORS

MAKE AND MODEL	YEAR	LICENSE PLATE LAMP	LENS	RIM OR COVER	REFLEX RE-FLECTOR	LENS	RIM
Austin Healey 100	1954	53836	572596	572603			
Austin Healey	1955	53836	572596	572603	57052	574749	573801
Austin Healey	1956	53836	572596	572603	57052	574749	573801
"100-6", 3000	1957-60	53836	572596	572603	57050	574749	573801
Austin Healey Sprite	1959-60	53836	572596	572603			
Sprite MK II	1961-62	53836	572596	572603			

STOP TAIL LAMPS BACK-UP LAMPS

MAKE AND MODEL	STOP TAIL LAMP LEFT HAND	STOP TAIL LAMP RIGHT HAND	STOP TAIL LAMP LENS LEFT HAND	STOP TAIL LAMP LENS RIGHT HAND	RIM	BACK-UP LAMP	BACK UP LENS	BACK UP RIM
Austin Healey 100	53178	53178	54570664	54570664	572734			
Austin Healey	53178	53178	54570664	54570664	572734			
Austin Healey	53178	53178	54570664	54570664	572734			
"100-6", 3000	53564	53564	576109	576109	572734			
Austin Healey Sprite	53330	53330	574635	574635	574636			
Sprite MK II	53916	53916	54572411	54572411	54572304			

SWITCHES & KNOBS

MAKE AND MODEL	YEAR	PETROL	KNOB	REVERSE	STARTER PANEL OPER-ATING	KNOB	STOP-LAMP	WIPER	KNOB	TERMINAL BLOCK
Healey 100	1954	*76605			31363		34765	31434	317530	
Healey 100	1955-56				31363		34765	31434	317530	
Healey 100-six	1957				31363		34765	31434	317530	
Healey 100-six &	1958-59				31363		34765	31434	317530	
Healey 3000	1960				31318					
		*Battery Master Switch						* Later		

SWITCHES & KNOBS

MAKE AND MODEL	DIPPER	BOOT OR INTERIOR	FOG-LAMP	KNOB	HEATER	KNOB	Lighting Starting and/or Interior	KNOB	LIGHT-ING	KNOB	PANEL	KNOB
Healey 100	31284						31403		31126	316129	31140	
Healey 100	31284				78261	768473	31403		31126	316129	31140	
Healey 100-six	31284				78359	54332086	31403		31126	316129	31140	
Healey 100-six &	31284						31403		31126	316129	31140	
Healey 3000	31284						31403				31140	

SWITCHES & KNOBS

MAKE AND MODEL	YEAR	PETROL	KNOB	REVERSE	STARTER PANEL OPER-ATING	KNOB	STOP-LAMP	WIPER	KNOB	TERMINAL BLOCK
Healey Sprite	1958-60						34765	31434	312872	
Sprite MK II	1961-62						34542	34426		

SWITCHES & KNOBS

MAKE AND MODEL	DIPPER	BOOT OR IN-TERIOR	FOG-LAMP	KNOB	HEATER	KNOB	Lighting Starting and/or Interior	KNOB	LIGHT-ING	KNOB	PANEL	KNOB
AUSTIN – *Continued*												
Healey Sprite	31284						31270	316285	31837		31140	
Sprite MK II	31800						34387		31837		31140	

HORNS HORN RELAYS MIRRORS WARNING LIGHTS

MAKE AND MODEL	YEAR	HORNS: HORN LOW NOTE	HORNS: HORN HIGH NOTE	HORN RELAY	MIRROR	WARNING LIGHTS: MAIN BEAM	CHOKE OR PETROL	IGNITION	FLASHER	INDI-CATOR SWITCH
Healey 100 (including '3000')	1954-60	069448	069474						38067	
Healey Sprite	1958-60	70141	70141							31743
Sprite MK II	1961-62	70159	70159			54944812		319408	38177	31743

AMMETER FLASHER UNIT FLASHER RELAY JUNCTION BOX FUSE BOX

MAKE AND MODEL	YEAR	AMMETER	FLASHER UNIT OR TRAFFI-CATOR	FLASHER RELAY	JUNCTION BOX OR TERMINAL BLOCK		FUSE BOX: FUSE BOX	COVER	FUSES	
Austin-Healey	1954-60		35010	33117-			033240		188218	188219
Austin-Healey Sprite	1958-60		35010				033239		188218	
Sprite MK II	1961-62		35020				033283		188218	

WINDSHIELD WIPERS

MAKE AND MODEL	ARMATURE	GUIDE WHEEL OR SHAFT GEAR	GEAR AND SPINDLE	FIXING PLATE AND STUDS	SUNDRIES KIT	ARM LH	ARM RH	BLADE
Austin Healey 1954	739731	738908	736056	741628	741596	737571	737571	738724
Austin Healey 1955	739731	738907	736056	741628	741596	737571	737571	738724
Austin Healey 1956-57	743029	743943	740955	743176	743049	745083	745083	738724
Austin Healey 1958-62	743029	743943	740955	743176	743049	745083	745083	738724
A.H. Sprite 1958	743029	743172	740955	743176	743049	745076	745076	737910
A.H. Sprite 1959	743029	744536	740955	743176	743049	745076	745076	737910
Austin Healey Sprite later 1959-60	743029	744742	740955	743176	743049	745076	745076	737910
Sprite MK II	743929	54713764		743176	743049	745076	745076	737910

WINDSHIELD WIPERS

MAKE AND MODEL	YEAR	MOTOR	WHEEL BOX OR CLUTCH HOUSING	LIMIT SWITCH	CROSS HEAD AND RACK	COVER MOTOR	BRUSH GEAR	BRUSH SET	COIL
Austin Healey	1954	75150	72629		738764	741556	733661	729367	739734
Austin Healey	1955	75144	72629		738764	741556	733661	729367	739734
Austin Healey	1956-57	75214	72674	743080	743221	743070	743171	729367	743173
Austin Healey	1958-62	75297	72744	743080	743221	744015	743171	729367	744009
Austin Healey Sprite	1958	75296	72674	743080	743221	744015	743171	729367	744009
Austin Healey Sprite	1959	75213	72674	743080	743221	744015	743171	729367	744009
Austin Healey Sprite later	1959-60	75213F	72674	744325	743221	744015	743171	729367	744009
Sprite MK II	1961-62	75452	72744	744325	743221	745768	743171	729367	54712958

OVERDRIVE EQUIPMENT

MAKE AND MODEL	YEAR	CONTROL	GEAR SOLENOID	CENTRI-FUGAL SWITCH	RELAY	THROTTLE SWITCH	INTER-RUPTER SWITCH	KICK DOWN SWITCH
AUSTIN								
Healey 100	1955	31452	76515	76108	33157	31402	31542	
Healey 100	1956	31452	76515		33157	31402	31542	
Healey 100-6	1957		76515		33157	31402	31542	
Healey 100-6	1958		76515		33157	31402	31542	
Healey 100-6	1959		76515		33157	31402	31542	
Healey 3000	1960-62		76525		33157	31402	31849	

Part numbers are very handy when rummaging through tables at swap meets.

Don Hardie

MARKING TOP DEAD CENTRE

The first thing to do is remove the generator and fan belt. This will reveal the crankshaft pulley and make it a lot easier to do the job.

Replace the timing chain cover bolt directly opposite the outer edge of the pulley with a 5/16" BSF beheaded bolt with its end tapered into a timing pointer (**See Fig 1**).

TDC is found by: -

1. Bringing No 1 piston up to just before TDC, by looking through the plughole.
2. Then screw a spark plug body (with a thread tapped through the middle) into No1 cylinder (**See Fig 2)** and a then screw the threaded rod into it to touch the top of the piston and lock in position.
3. Mark the crankshaft pulley in line with the pointer then turn the piston away until it again touches the threaded rod again (nearly a full revolution) and then mark the pulley again. TDC should be half way between the two marks.
4. Do this twice more with the threaded rod in slightly different positions, to check the accuracy of the first attempt.
5. File a notch at TDC and a second one clockwise for 6 Degrees before TDC. To calculate the distance between the two marks, use the formula below.
6. Put some white paint in the 6 Deg. notch and you have an accurate mark for both static and stroboscopic timing.

FORMULA

Distance between the two marks = Pulley diame x $\frac{22}{7}$ x $\frac{6}{360}$

Fig 1.

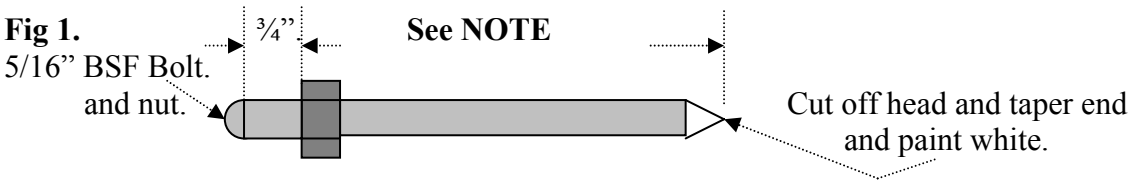

NOTE: - This is the distance from the timing cover flange to the pulley, this may vary depending on the pulley fitted.

Fig 2.

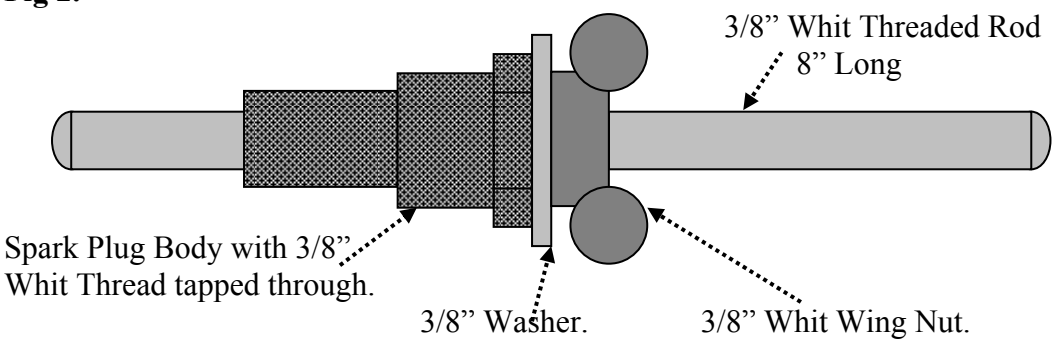

See update next page

UPDATE 20/09/09

“How to find the firing point on No. 1 - Barrie, Victoria, Australia

Hello, I used to work at Longbridge starting in 1948 in the rectification dept.

The way we used to find the firing point on No1 on an A40 was to put a 2 thou feeler in No7 valve, turning the engine until it was just gripping the feeler and that was just right for No 1 firing.”

Taken from an A40 Forum

****

Hi

I don`t know whether anyone has responded to your query dated 8th August, but the valve timing for the Devon is as follows :-

Based on a clockwise direction of rotation

Inlet opens -5 degrees TDC

Exhaust valve closes +10 degrees TDC

Exhaust valve opens +120 degrees TDC

Inlet closes +225 degrees TDC

This information taken from the A40 Devon Service Manual, a must for anyone owning a Devon. Secondhand copies of which are available from The Austin Counties Car Club Spares Secretary , Ray Dawes.

If you want to save 10% on the cost of the manual plus any spares you may require then why not become a member of the Club. A Membership Application Form is available on the website.

Regards
Dennis Robinson
ACCC Membership Secretary

****

As the 100 inlet valve also opens 5Deg before TDC The above method of finding No1 firing point is a way of checking your finding.

100 TECHNICAL
METAL FOLDER

1. Recess 45mm at both ends of the base angle and weld on the 50mm x 1/2" pivot pins leaving 12mm protruding. **The centre line of the pivot pins must be in line with the right angle edge of the angle iron.**

2. Weld the vice clamping plate to the centre of the bottom of the base angle.

3. Recess 45mm at both ends of the folding angle (to clear the pivot pins when assembled) and clamp it to the base angle with the horizontal faces in line.

4. Place the hinge plates over the pivot pins and weld them to the folding angle.

5. While still clamped together weld on the two pipe connectors. **Keep heat to a minimum to prevent distortion.**

6. Recess 45mm at both ends of the clamping angle and grind / file the fold edge to an angle of about 60 deg.

7. Clamp the clamping angle to the base angle with the fold edge 1mm behind the the front edge of the base angle, drill the two 1/2" holes, install the two bolts, spacers and nuts and weld the bolt heads to the underside of the base angle.

8. You are now ready to go afolding.

To make an end folds when both sides have been folded, use a piece of square section tube or bar slightly higher than the side folds and slightly shorter than the distance between, under the clamping angle e.g. When folding the ends of the Bead Blasting Cabinet, fold both sides, then the bottom, then with a piece of 30mm square bar just under 200mm long between the clamping angle and the cabinet side, fold the top flange first, then the angled door flange.
All sorts of refinements could be made - bushes, wear adjustments etc. - but at a cost of $12 for the three pieces of angle when the pivots wear or the angle bends or warps, you throw it away and make another. Mine has folded the Bead Blasting Cabinet and a lot of other work without any appreciable wear.

PARTS LIST

40 x 40 x 6 mild steel angle	2 off 800mm....1 off 803mm
Hinge plates	2 off 50x50x6mm
Vice clamping plate	1 off 150x50x6mm
Hinge pins	2 off 50x1/2"dia. round.
Bolts and nuts	2 off 3 'x1/2"Whitworth
Spacers	2 off 2"x1/2"Int. dia.
Folding handles	2 off 1/2" pipe x 300mm
Pipe connectors	2 off 1/2" pipe

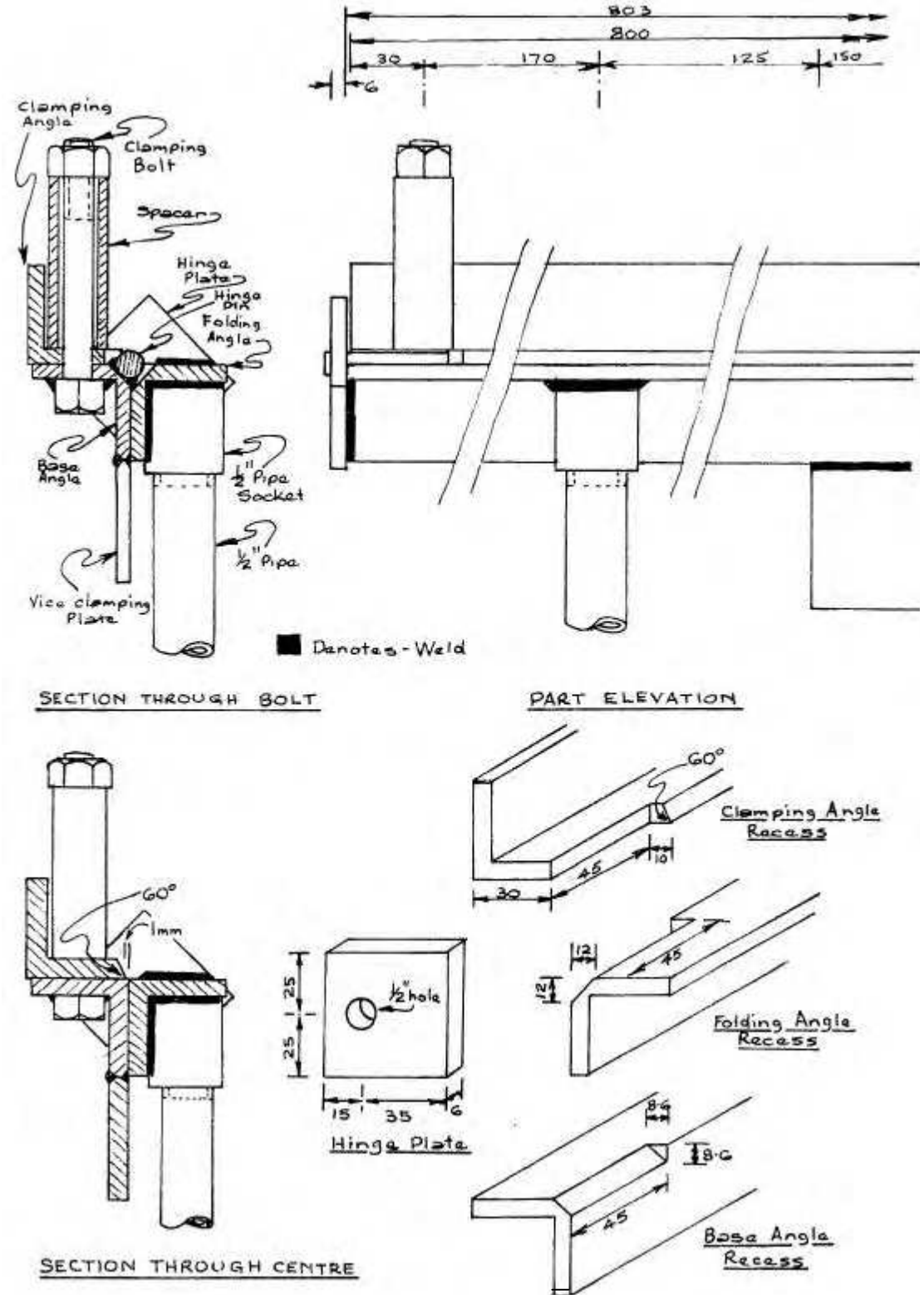
803
800
30
170
125
150
6
Clamping Angle
Clamping Bolt
Spacer
Hinge Plate
Hinge Pin
Folding Angle
Base Angle
½" Pipe Socket
½" Pipe
Vice clamping Plate
Denotes - Weld
SECTION THROUGH BOLT
PART ELEVATION
60°
Clamping Angle Recess
10
45
30
60°
1mm
12
45
12
Folding Angle Recess
25
25
½" hole
15
35
6
Hinge Plate
8·6
8·6
45
Base Angle Recess
SECTION THROUGH CENTRE

HARDTOP HOIST AND STORAGE (January 2014)

The completed assembly is shown below.

Upper lift point: 2x4 with hangers nailed between two roof rafters with a metal strap bent into a “U” and placed over the support. A bolt through holes in the strap connects a spring snap link to a two pulley sheave. Support not drilled for bolt so as to not weaken it.

Lower lift point: two sheave pulley with a spring snap link. Two 1-1/2 wide straps were sewn up, with 1-1/2” welded rings on each end, and wrapped around the hardtop. The current strap design may damage the hardtop seals but this is not a concern for the un-restored hard top.

The pulleys are rated at 400 pounds. It is easily operated with one hand. Parts cost about $50 and were purchased at ACE Hardware.

COMPLETE ASSEMBLY

AUTHOR UNKNOWN

UPPER LIFT POINT

LOWER LIFT POINT

HARD TOP SOCKETS

MG B hard top sockets fitted to secure hard top.
Left Hand shown.

REAL HEALEY NATTER
NARROW FAN BELT
&
HARMONIC BALANCER

N.S.W. AUSTRALIA Austin-Healey OWNERS CLUB FLAT CHAT

APRIL 1995

I was right last month when I said the narrow fan belt might not be far in the future. Again within a month I suffered the indignity of being manhandled (I'd rather be womanhandled).

First the grill and then the bonnet, this was easy as previously the hinge rivets had been replaced with 1/4 inch stainless bolts (with sufficient unthreaded portion to go through the hinge) and self locking nuts, so it could be removed without changing the adjustment. Next was the radiator, which on closer inspection showed horrendous repairs covered up by false fins, so off it went to Sydney Wide Radiators at Brookvale who made and fitted a new core with 70 more tubes and closer fins.

A 6 cylinder harmonic balancer fitted exactly in place of the old crankshaft pulley, but first the chain cover bolt directly opposite the outer edge of the balancer pulley was replaced by a 2 1/2 inch 5/16 BSF nut and beheaded bolt with its end tapered into a timing pointer. TDC was found by bringing No 1 piston up to just before TDC (by looking through the plug hole), then a spark plug body (with a thread tapped through the middle) screwed into No1 cylinder and a threaded rod screwed into it to touch the top of the piston. The crankshaft pulley was marked in line with the pointer then turned until the piston again touched the threaded rod and this position marked on the pulley, TDC should be half way between the two marks. This was done twice more with the threaded rod in slightly different positions, to check the accuracy of the first attempt, which proved it to be correct. A notch was filed at TDC and a second one clockwise 8.3 mm away for 6 Degrees Before TDC (6 1/4 inch dia pulley).

The next job was to remove the generator pulley and replace it with a narrow one from a 6 cylinder reversed (i.e.. with the long boss to the outside) and a 5/8 inch washer against the generator fan because of the pulleys concave face. The nut was fitted with Loctite as there wasn't enough thread to refit the spring washer. There was plenty of adjustment in the slotted holes in the generator bracket to align the pulley with the crankshaft pulley using a 3-foot straight edge.

The 6 cylinder water pump pulley was the biggest job. As suggested by John Dowsett, a 3/8-inch long spacer was made and fitted to the pump shaft. Then 1/4 inch turned off the fan end inner boss of the new pulley and the pulley fitted (with Loctite on the nut as before). Alignment to the crankshaft pulley was checked with a straight edge and found to be correct, but could have been adjusted by shimming or shortening the spacer.

Eric Rudd has a way of modifying a wide pulley using an MG B pressed steel one and David Wesley screwed the outside of a narrow pulley onto the body of a wide one. But you will have to see them about those ways.

The 1/4 inch spacer fitted with my Texas Cooler on the wide pulley was left off but if you are fitting a standard aluminium air stirrer you may have to turn 1/4 inch off the fan mounting face of the pulley to maintain sufficient clearance from the radiator.

I have since found that The Texas Kooler cannot be removed due to its closeness to the radiator. 1/4" or possibly 1/2", if there is sufficient thread left for the 4 fan mounting set screws, should be removed from the fan mounting face of the pulley if you think it is possible that you may one day have to remove the fan without having to remove the radiator.

Fitting a 10A-1225 Fan Belt and refitting radiator, bonnet and grill completed the job.

The water pump and generator are now turned 1.2 times faster, due to the larger crankshaft pulley, but I will probably have to wait till next summer to see if this, combined with the better radiator and Texas Kooler, cures or at least helps my hot bloodedness. Also the Harmonic Balancer should stop any delirium tremors.

DMH-000
(THE HARDIE'S 100-4)

PS Margo has always reckoned Don's middle initial 'M'
stands for Modification.

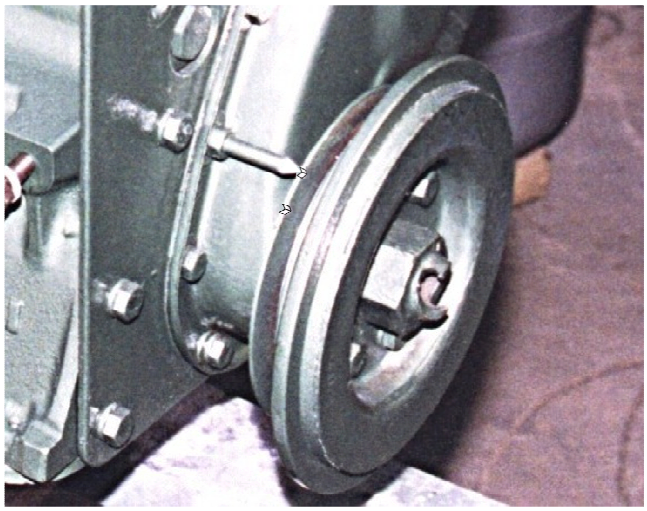

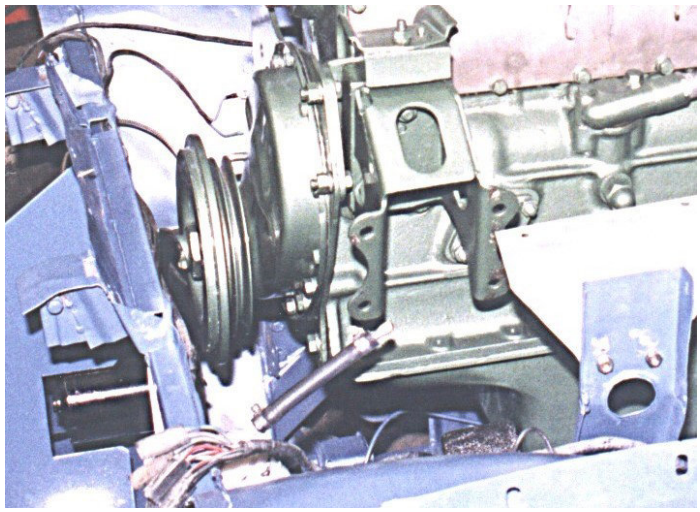

Beheaded bolt and timing mark

NO BRAKE LIGHT TIP

This has turned out to be one of those quirky little problems that some times come the way of a Healey owner.

Start with the brake light switch of course, and the multimeter shows a connection between the terminals when the pedal is in and 12v at the outlet side.

Following the circuit along takes us to the stop light/indicator override relay which is that strange little box of electric gubbins which allows you to use stoplight as an indicator and vice versa. This device is found in all 100/4 and 100/6 models. A couple of hours cleaning terminals, measuring air gaps and checking wires suggested that this too was working as the Prince of Darkness intended so on to the wiring loom various bullet connectors and eventually to the lights at the back. Nothing I did could convince these brake lights to do their thing.

To cut a long story short (and I mean a loooong story), we eventually found that the brake light switch was indeed faulty. Clearly it had enough of a connection to carry voltage but not the current draw when connected to a bulb. My dad always swore by a little test light he made up with alligator clips on it. It was using this simple bit that I eventually traced the problem. I have never come across this problem before.

Reprinted from Healey Torque, Queensland

Lifted from HEALEY TORQUE – AHOC NZ – November 2002

HEATER

Clayton heater modified with a better fan and more powerful motor and cabin tap above heater. As you can imagine it's only used for demisting the windscreen

Fitted 17/04/96.

HIGH LEVEL BRAKE LIGHT

Eleven years ago I fitted blinkers into the reflector pods because I was worried that the then drivers wouldn't realise what the blinking stop light meant and after years of thinking about it, I have finally fitted a High Level Brake Light as the current drivers seem to have to be shown at eye level what is going on in front of them.

The 24 LED one I fitted is available at most parts places, there was a 36 LED one, but I thought that was a bit of overkill.

To secure it without drilling any holes in my shiny paintwork I used two Eclipse magnets of 2 Kg holding power with electrical tape on the bottom to protect the aforesaid paint. I found that on very rough roads with Healey suspension the light moved on the boot lid and ordered some 5Kg pot magnets from http://stores.ebay.com.au/Frenergy-Magnets , these hold very firmly.

Wiring was reasonably easy with connectors just near the light so I can remove it when parking. As I don't use the stop lights as blinkers any more, connection was made to the wiring in the boot. If you are still using them as blinkers you will have to run your wires up front to the stop light switch or terminal 5 on the flasher relay. Remember that if you are still Positive Earth that the red wire goes to earth.

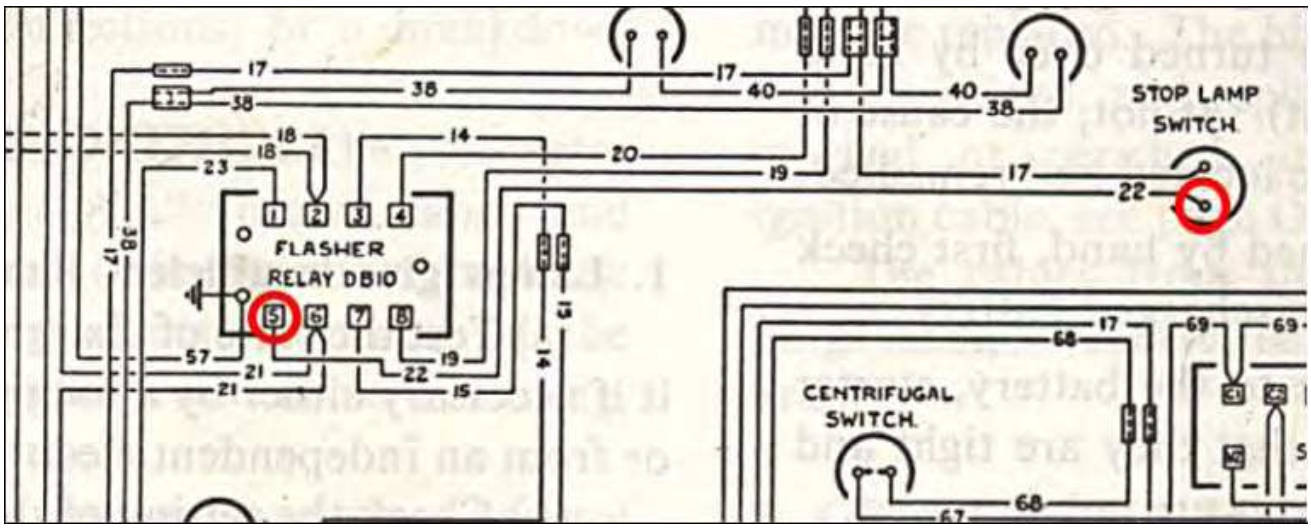

NOTE

I have found that the new magnets have left rings on the boot lid paint and have had to find another place to mount the light.

On the Tonneau Cover I have replaced the two pieces of aluminium sewn into the rear that clip into the retainers on the shroud, with a piece of steel bar 20wide x 3thick x 570long. The magnets attach firmly to this.

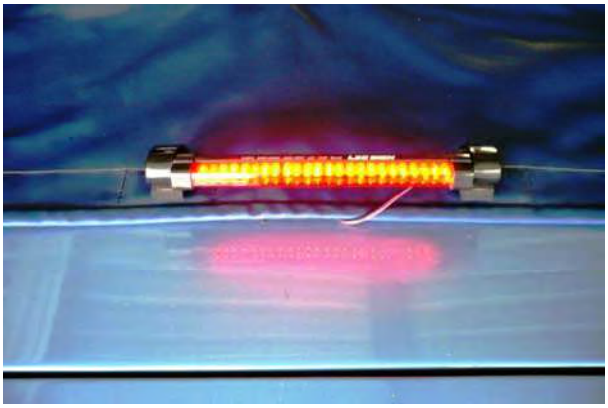

The magnets attach firmly to the existing steel bar at the back of the hood.

In the hard top two small steel brackets screwed into the wood surround of the back window which is fiber glassed into the shell hold the light firmly.

I have travelled over 1,500 miles since these modifications with the light attached in all three positions and it never looked like coming loose or moving.

Best of luck – Don Hardie – healeynut@hotmail.com 13/07/07 Updated 02/10/08

BJ8 MASTER CYLINDER FITTED TO A 100

John Bantoft in Tasmania had problems restoring the original master cylinder and fitted a BJ8 one at the suggestion of Steve Pike of Marsh Classic Restorations in Victoria.

A bracket was fabricated to line it up with the brake pedal and the cylinder was then fitted and plumbed into the hydraulic system.

Don Hardie 2013

AH100 Dragging Brakes - Faulty TRW Master Cylinders
William Obrien
to Don Hardie <healeynut@hotmail.com>;9:26 AM
PhotosDocuments
Hi Don,

You helped me get a copy of your AH100 Tech collection about a year ago.

I'm afraid I might have a new addition for you and a warning on an AH100 part being sold world-wide.

After my car was fully restored in June 2013, I began to notice occasional brake drag after about 6 months. No amount of rod adjust or individual shoe adjust could correct. Drag is uniform on front wheels when car jacked up, brakes pumped strongly & wheels spun by hand....no clean release either side. Increased temperature has a strong negative effect. My front brakes were used up in ~ 700 miles.....

In our *British Car Forum*, several others had same exact problem.....see attached. I contacted 100M owner M, Runci asking how problem was fixed & got response below in red

As for the brakes my recollection is that we swapped out MC's twice until finally finding one that didn't cause the brakes to lock up. I think (?) we rebuilt an original NOS MC to avoid that build problem. I really never got a satisfactory answer as to the remedy of the problem in the new units. In any case the problem didn't recur so I put it all out of my mind.

A nearby friend, Walt, restoring a 1954 BN1 let me borrow his original MC which I carefully took apart & compared with internals of my car.....a new TRW unit purchased in 2012 installed by restorer BRC. This unit has **TRW** on left casting side; **BMC 10** on the right. The BN1 original has 6 internal casting bleed holes of 0.0890" diameter (#43 Drill Bit). The TRW unit has 6 holes significantly smaller. 0.0595". The bleed washers are signiicantly different also. See attached for MC internals photos,

At same time I talked to my local Moss parts dealer who had 2 original AH100 MCs along with 2 Girling MC rebuild kits from 1990s. He gave me these & at same time I ordered from him a Moss supplied 2016 TRW MC for AH100. Also talking to my restorer, BRC, they were having a dragging brake problem with other AH100 restorations. They gave up after 6 TRW units & adapted a 3000 MC system with client approval. They gave me 3 recent TRW rejects from their junk pile for forensic study.

A photo of my collection is attached.....All original units have 0.0890" bleed diameter....all TRW units have 0.0595" diameter....

This reduction of bleed hole diameter has a remarkable impact on pressure driven bleed hole flow rate,,,,,Hagen-Pouiselle solidly established ~ 1840.....see attached.....

A secondary (???) contributing effect is the unstable materials/thickness of the bleed washer.

Washer measurements new/unused vs used/problem MC suggest mechanical/geometric instability with the mysterious **0.0105"** original to 2016 **0.0055** thickness reduction. .

Rest of the attached tell the story better than additional words.

Not a happy addition to your collection....but important one I/m afraid.

I encourage anyone world wide to buy a TRW unit, disassemble & compare #s with original

I don't recommend road testing.....let parts rep know what's up.....they suffer with **BAD NEW Parts** (**BNP**) as well.

Thanks again for your AH100 Tech collection,,,,I also passed earlier version of this MC alert to Roger Swales. 100M Registry FC-133

Bill Obrien

Pictures etc. Below.

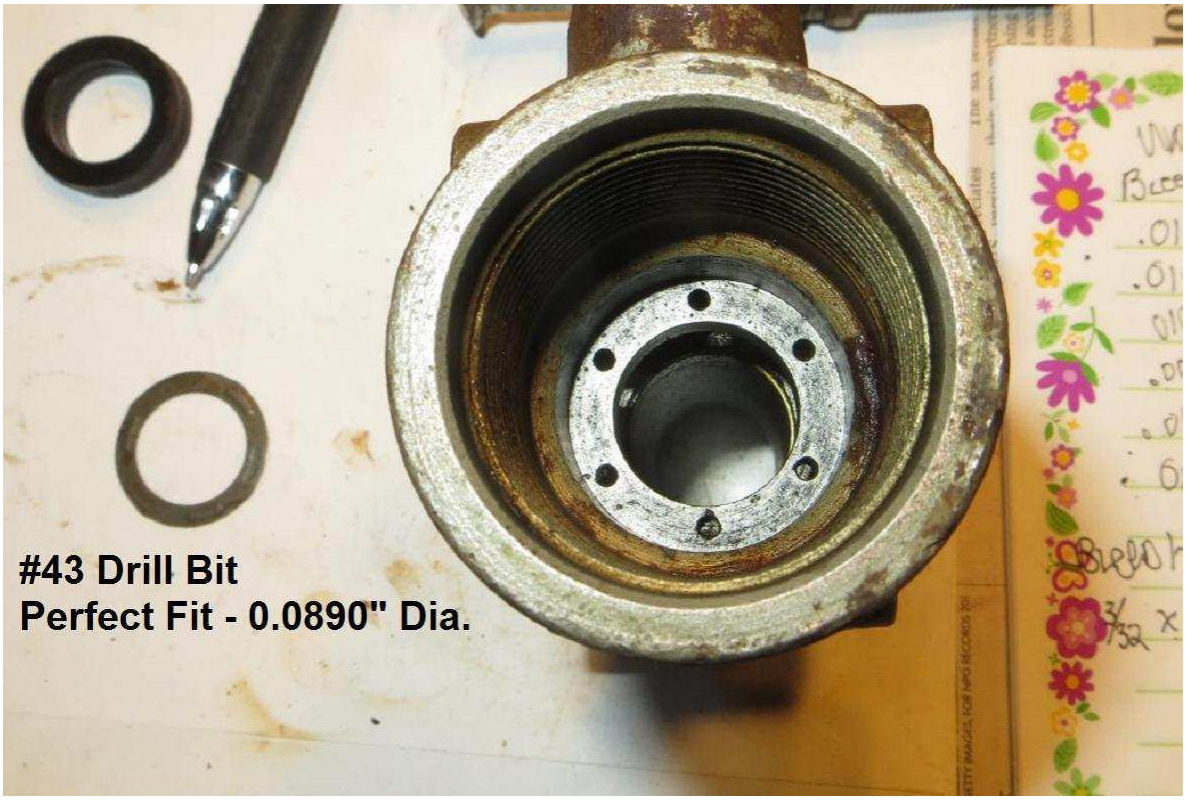

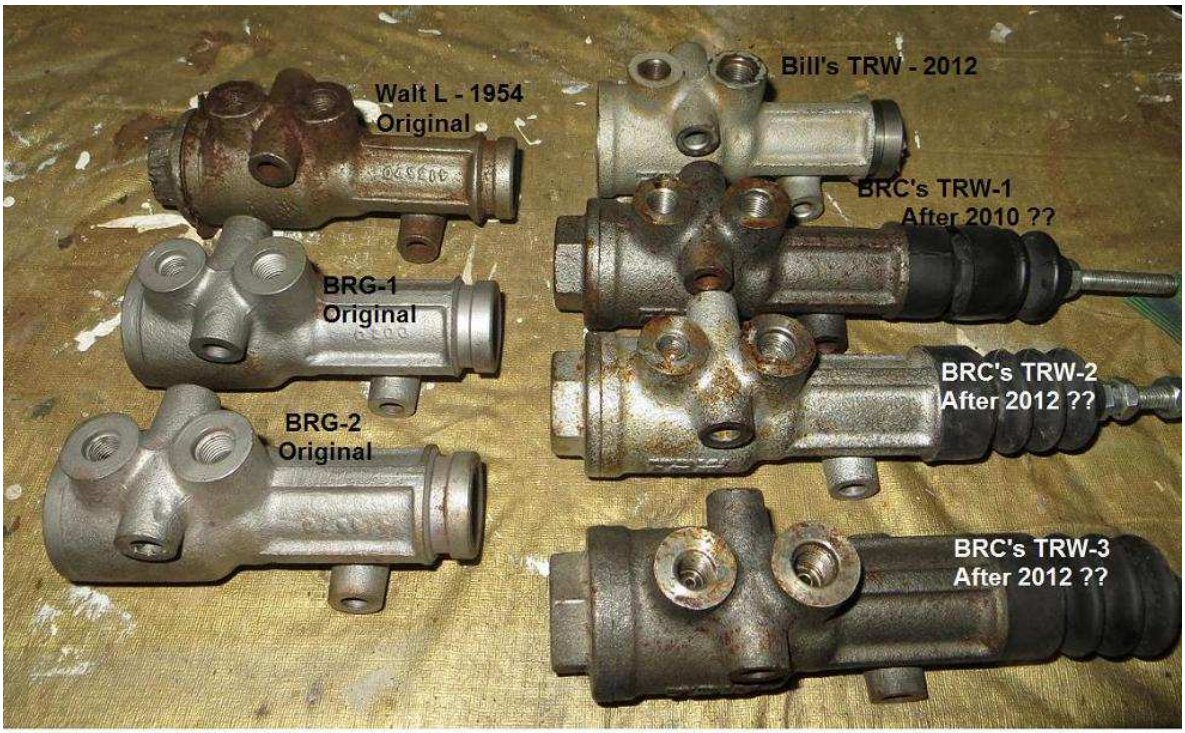

Note Bill's TRW - 2016 measured & returned due to small bleed holes identical to TRW 2012. Traded in for the 2 BRG originals measuring same larger bleed holes as Walt L/1954.....

FROM THE BRITISH CAR FORUM

Healey 100 Master Cylinder Failures

Friends:
I have replaced three master cylinders over the course of the last year in my BN2. In each instance the symptoms are identical: even under light use, free play in the pedal progressively diminishes until the brakes effectively seize as the pedal remains glued to the floor. When the brakes are allowed to cool, normal free play of the pedal returns and for a time the brakes will operate normally. Each is a new Lucas/TRW unit which I chose since he car has been restored to AH concours standards.
Now I have read elsewhere of problems over the last several years with MGA units of the same manufacture, which reportedly have return springs that are overbuilt and do not release brake fluid as required because they maintain relief pressure too high. I presume this may be the problem with my units as well. I have also read of problems with units of other manufacture which are widely available on which there are reports of internal rubber component failure.
Oddly I haven't read of similar reports on the performance of either of these units in Healey BN2's - I may have just missed it since I've spent so much time parked on the side of the road.
Can anyone shed light on this problem, and ideally, on a solution. Periodic roadside stops to allow the release of brake fluid pressure could be enjoyable on a scenic country route, but are hardly practical on today's roads with lots of impatient fellow drivers.
Matt Runci

Re: Healey 100 Master Cylinder Failures

Mine has original drum brakes with about an inch of free play at the pedal. Beyond the free play, the pedal is rather firm, feels like it hits a brick wall. I do set the linings rather tight at the wheels, so there is a little drag when I turn each wheel by hand.

As per my post, you can test the opening of the brake fluid return path by applying the brakes partially with one drum removed. Let the pedal snap back and the linings and wheel cylinder should slowly retract fully pushed by the brake return springs. If they don't retract, your master cylinder is either not fully retracted or the bleed ports in the m/c are plugged. OR SMALL DIAMETER ??? bill o
The upward pointed front wheel cylinders on the 100's are also prone to corrosion. If the boots are bad, water can collect and migrate into the bores. This can lead to sticking brakes too, but a sticking wheel cylinder should not cause the pumping up problem you describe. So I think your problem is at the m/c, probably the actuating rod set too long. Make sure the return spring on the pedal is working also.

There should be nothing to prevent the m/c from bottoming out against the "off" position.
Good luck, let us know how it turns out..

Bill Sullivan
Albuquerque, NM

Brake Issue on BN2

Went for the first ride of the spring yesterday. The 100 ran great until we couldn't avoid one of Pennsylvania's ubiquitous potholes. Front right took a shot and we immediately heard an intermittent metallic noise from the front right. Sounded like bearings to me (had plans to rebuild both front hubs this week) so headed for home, luckily only about 3 miles away. About 1 mile from home, the brake pedal became rock hard but I could still stop the car. When we get into the garage, all 4 brake drums were very hot and the wheels almost locked. After cooling off, the brake pedal softened and the car rolled easily. I am assuming that heat from whatever occurred in the front right caused this issue but any other thoughts on what to look for? Have not pulled any wheels yet.

Re: Brake Issue on BN2

Mike:

The brake actuation rod and brake pedal linkage must allow the master cylinder piston to move back all the way to expose a tiny bleed port that lets the brake fluid return from the wheel cylinders to the master cylinder reservoir. Without the bleed port, the brakes pump up a bit with each actuation until they finally won't release the shoes from the drum.

Make sure the external brake return spring is present and working. If so, adjust the screw so to shorten the rod just a tad. Chances are this will fix the problem. I did have one non-Healey where the bleed port managed to plug up from debris in the brake fluid. If that's the case, you may have to remove and clean the master cylinder very thoroughly to fix the problem.

If the port is open, you can pump the brake repeatedly and the pedal should not pump up.

Bill.

Bill Sullivan
Albuquerque, NM

Re: Brake Issue on BN2

The Master Cylinder was the culprit. The return spring missing didn't help either. I could not get the master apart to see what was wrong inside but it did not "plunge" smoothly and got hung up. Decided to pull the hubs

while I had the drums off to check the brake lining. Good thing I did,

there are no bearing spacers on either front axle. Good time to replace the bearings . . . . there's always something.

Thanks for the guidance.

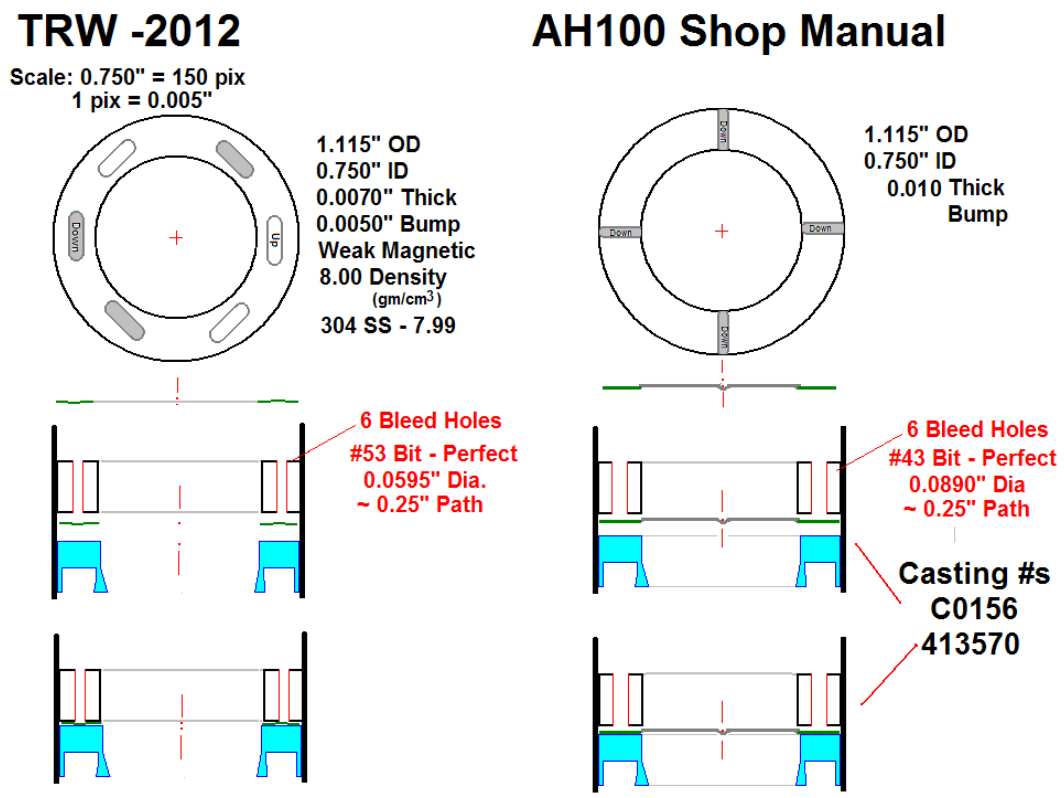

Unit	Bleed Holes	Bleed Washer Material	Bleed Washer Base Thick	Bleed Washer Max Height
Walt - Original	#43 Drill - 0.0890"	Steel - Strong Magnetic	0.0103"	0.0187"
BRG1 - Original	#43 Drill - 0.0890"	Steel - Strong Magnetic	xxxxxx	xxxxxx
BRG1 - Original	#43 Drill - 0.0890"	Steel - Strong Magnetic	xxxxxx	xxxxxx
TRW - 2012 - WGO	#53 Drill - 0.0595"	Stainless Steel - Weak Magnetic	0.0076	0.0188"
TRW - 2016 - Moss - Unused	#53 Drill - 0.0595"	Steel - Strong Magnetic	0.0060" to 0.0055"	0.0259"
TRW - BRC Reject1 - Used	#53 Drill - 0.0595"	Stainless Steel - Weak Magnetic	0.0074"	0.0228"
TRW - BRC Reject2 - Used	#53 Drill - 0.0595"	Steel - Strong Magnetic	0.0060" to 0.0055"	0.0142"
TRW - BRC Reject3 - Used	#53 Drill - 0.0595"	Stainless Steel - Weak Magnetic	0.0074"	0.0198"
Girling Rebuild Kit1- 1995	xxxxxx	Steel - Strong Magnetic	0.0105"	0.0195"
Extra Washer - Kit1 -1995	xxxxxx	Steel - Strong Magnetic	0.0105"	0.0189"
Girling Rebuild Kit2- 1995	xxxxxx	Steel - Strong Magnetic	0.0105"	0.0227"

Hagen-Poiselle Flow - 1839

Well established result relating flow rate of viscous liquid through a capillary driven by pressure difference.....

$$Q = \pi \Delta P R^4 / 8 \mu L$$

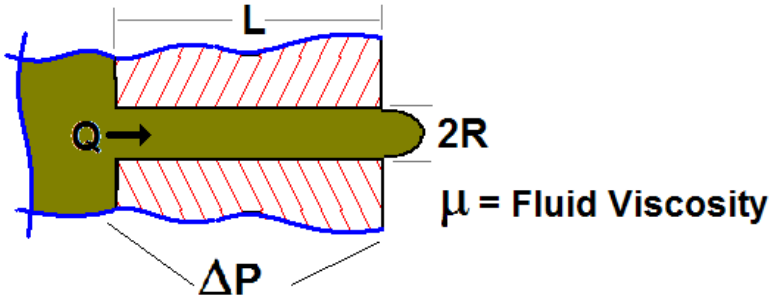

Holding pressures, length, viscosity constant, changing R has major effect on flow Q.

$$Q_1/Q_2 = R_1^4 / R_2^4$$

For 1954 to 2012:

$$Q_{1954}/Q_{2012} = R_{1954}^4 / R_{2012}^4 = (0.0890/2)^4 / (0.0595/2)^4$$

$$Q_{1954}/Q_{2012} = 5.006$$

Brake Relax Flow Reduced 5X


AH100
Shop
Manual
1954
2012
2016

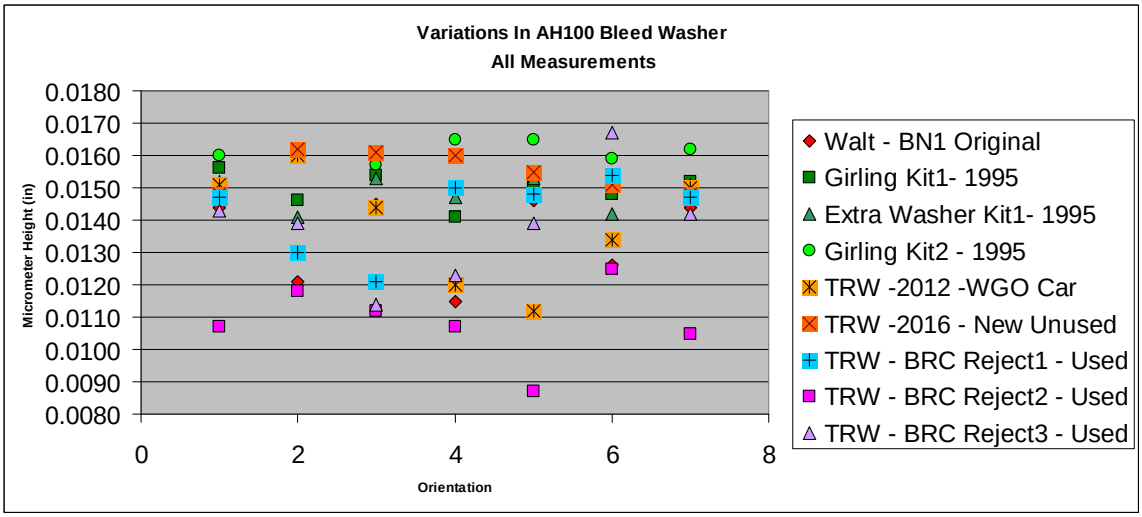
Variations In AH100 Bleed Washer
All Measurements
Micrometer Height (in)
0.0180
0.0170
0.0160
0.0150
0.0140
0.0130
0.0120
0.0110
0.0100
0.0090
0.0080
0
2
4
6
8
Orientation
Walt - BN1 Original
Girling Kit1- 1995
Extra Washer Kit1- 1995
Girling Kit2 - 1995
TRW -2012 -WGO Car
TRW -2016 - New Unused
TRW - BRC Reject1 - Used
TRW - BRC Reject2 - Used
TRW - BRC Reject3 - Used

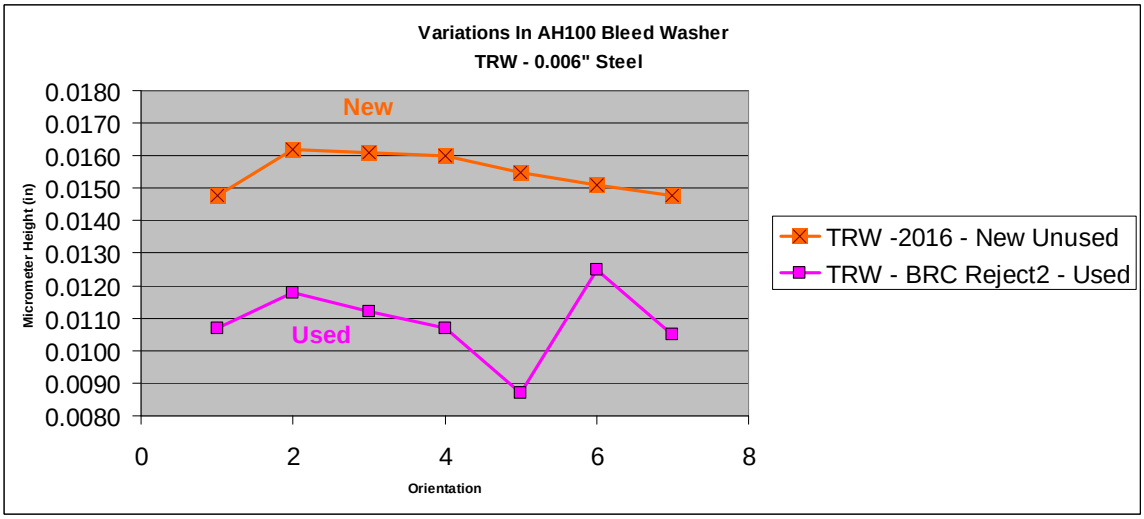
Variations In AH100 Bleed Washer
TRW - 0.006" Steel
Micrometer Height (in)
0.0180
0.0170
0.0160
0.0150
0.0140
0.0130
0.0120
0.0110
0.0100
0.0090
0.0080
New
Used
0
2
4
6
8
Orientation
TRW -2016 - New Unused
TRW - BRC Reject2 - Used

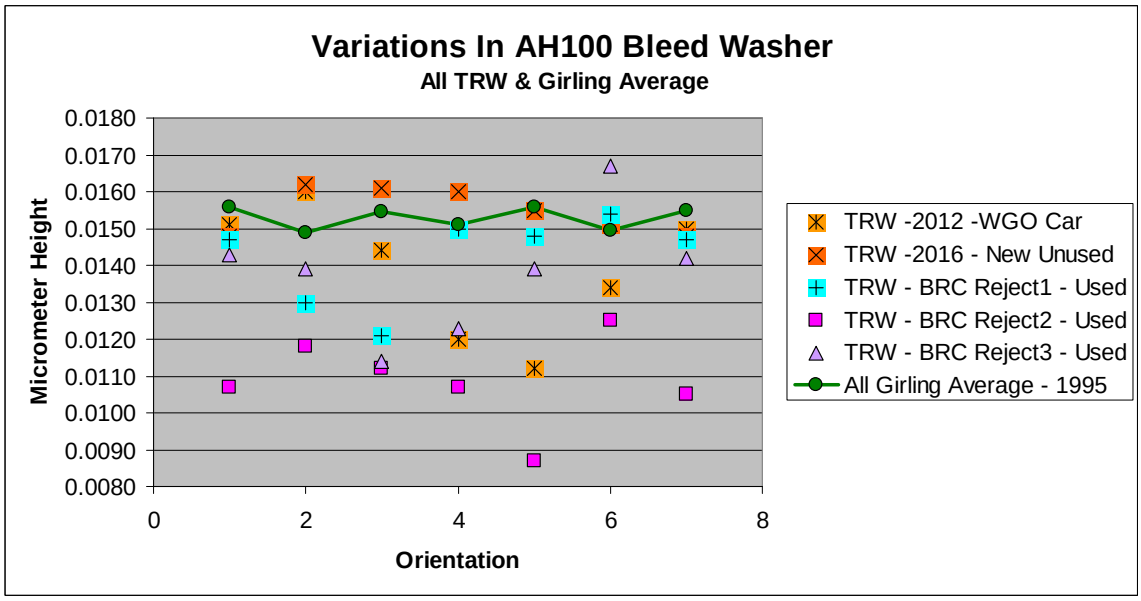
Variations In AH100 Bleed Washer
All TRW & Girling Average
Micrometer Height
0.0180
0.0170
0.0160
0.0150
0.0140
0.0130
0.0120
0.0110
0.0100
0.0090
0.0080
0
2
4
6
8
Orientation
TRW -2012 -WGO Car
TRW -2016 - New Unused
TRW - BRC Reject1 - Used
TRW - BRC Reject2 - Used
TRW - BRC Reject3 - Used
All Girling Average - 1995

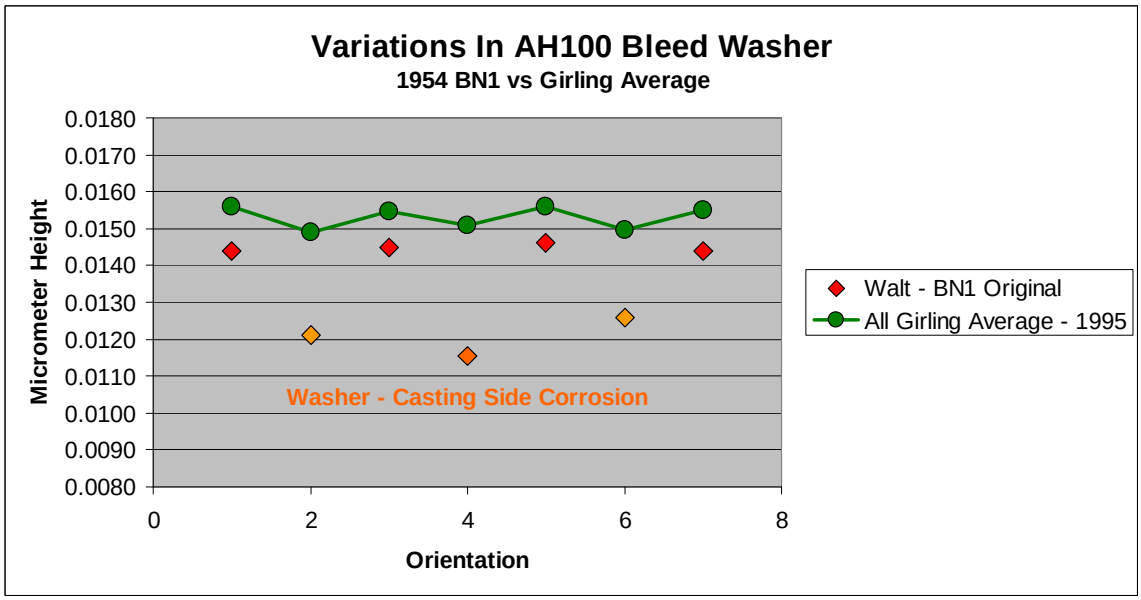
Variations In AH100 Bleed Washer
1954 BN1 vs Girling Average
Micrometer Height
0.0180
0.0170
0.0160
0.0150
0.0140
0.0130
0.0120
0.0110
0.0100
0.0090
0.0080
Washer - Casting Side Corrosion
0
2
4
6
8
Orientation
Walt - BN1 Original
All Girling Average - 1995

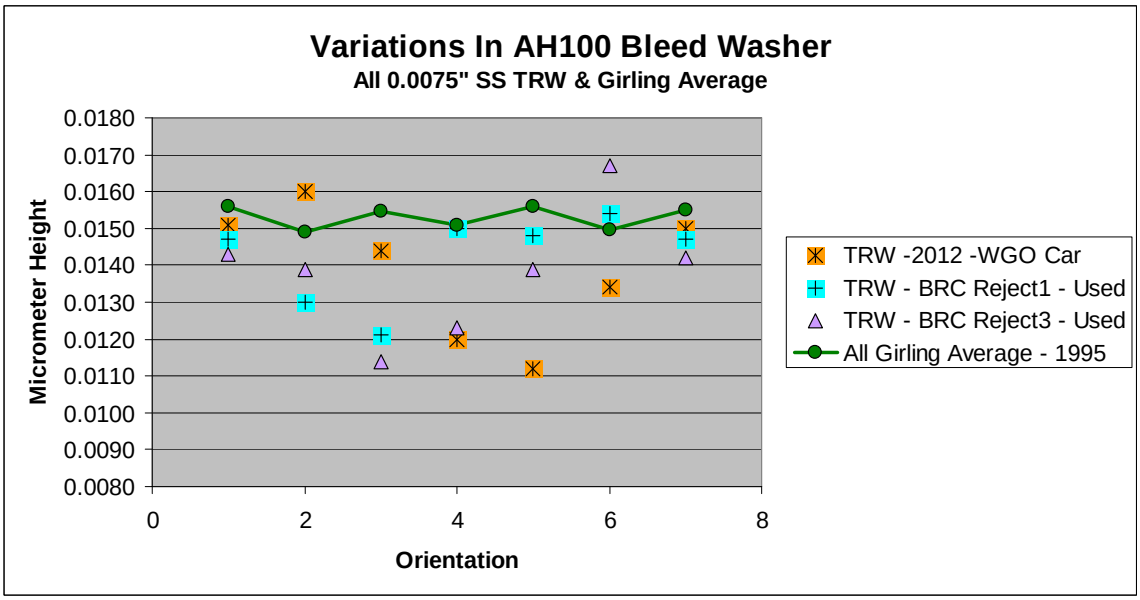

++

Thanks Bill,

I've heard so many complaints about modern replacement parts, but this one is astounding. A friend in Tasmania ended up fitting a BJ8 master cylinder as the new 100 one he bought gave so much trouble, maybe this was the same problem.
I'm lucky I still have an original master cylinder in my 100. When I bought it 1987 it I was given receipts that showed a Master Kit PBR K66X kit had been installed in 1983. When I dismantled it in 1995 to install a new kit I found that the master cylinder had a brass lining installed and the piston had been fitted with a brass sleeve, this was normal in the 1960/80s when new ones weren't available. I don't know if Brake Service Companies still do the later stainless steel sleeveing.
I've replaced the rubbers about every 5 years, (before any leaks or troubles occurred), in the 29 years (and 87,000 miles) I've had the car and haven’t had any trouble with the brass sleeveing.
I will certainly add this info to my PDF and will send the new version the John Simms to update on his website.

Thanks again,

Don Hardie

Laycock de Normanville Overdrive
A/D Type J Type & LH Type
OIL PRESSURE GAUGE TEST SET

Specifications:
Hydraulic Oil Pressure Test Gauge Set - A & D type, J, or LH type Laycock de Normanville Overdrive, functionally equal to / better than Churchill L.188, and Churchill adapter L.188-2, [BL tool 18G251 and 18G251E (LH)] which have long been out of production and very rare.

The gauge set consists of:

- Custom machined steel fitting to replace the operating valve plug. (A & D Type)
- Custom fabricated steel fitting to connect to the test port near the solenoid (J Type)
- Custom fabricated steel fitting to replace the relief valve plug (LH Type)
- 0 > 600 PSI - 2 inch diameter pressure Gauge - liquid (glycerin) filled, which helps absorb vibration and pressure spikes, increasing the service life of the gauge. The dampening action of the liquid also reduces pointer flutter and lubricates the internal parts of the gauge. The allowable operating/ambient temperature range for the glycerin is -4F to 140F (-20C to 60C). Gauge: 304 stainless steel case, polycarbonate window, black finished galvalume pointer, galvalume dial (white background with blue and black markings), brass movement, phosphor bronze bourdon tube.
- Associated brass connecting fittings. (A & D Type)
- High pressure 3000 psi hose and brass connecting fittings (J & LH Type)

The A & D Type gauge set allows the overdrive oil pump to operate while indicating oil pressure since the custom machined steel fitting duplicates the standard operating valve plug, while providing oil pressure connection to the
gauge. The J Type gauge set connects to the overdrive case at the test port, the LH Type gauge set connects to the overdrive case by replacing the relief valve plug.

The oil pressure gauge is the key tool for Laycock de Normanville Overdrive problem diagnosis and repair.

Price List and How to Order:

part no: 1001 A/D Type Oil Pressure Gauge Set complete $49.50

part no: 1002 J Type Oil Pressure Gauge Set complete $49.50

part no: 1003 LH Type Oil Pressure Gauge Set complete $49.50

part no: 1004 Any two Types (specify) Kit (one 0-600 psi gauge) $89.00

Type A/D & J

Shipping:

Within the U.S.A., via Priority Mail, is $5.50 per gauge sets no 1001,1002 & 1003, $6.75 for the kit no 1004. Domestic shipping cost will be calculated and included by the shopping cart.

International (beyond the U.S.A.) Add $6.00 surcharge to domestic shipping cost for shipping via Air Mail.

If postal insurance is desired, please contact me.

ADD International Shipping Surcharge $ 6.00

Payment can be made by credit card via PayPal or by sending your check / money order (payable in US$ through the US banking system) to:

James R. Holekamp * 133 Danada Drive * Wheaton, Illinois 60187 1010 * USA

For further information contact:

email me

TEL: +1 630 653 0610 FAX: +1 248 479 5271

TECHNICAL REPORT

OVERDRIVE PROBLEM

In this, my first report as your new Technical Officer for the Year 2001, 1 would like to start by expressing appreciation for the contribution of previous Technical Officers. I trust I can continue to assist you in the maintenance and trouble-free running of your beloved vehicles. Please do not hesitate to phone or write to me regarding any problems you may have, and I will do my best to help you. The only proviso is that, you and/or your problem (and hopefully solution) may be quoted as an example in my future articles!

Two interesting examples have recently come to light.

Problem 1: Overdrive works fine, but won't come back to normal.

Cause & Remedy: - The relief hole in the valve operating plunger was blocked by swarf, or some rubbish in the gearbox/overdrive unit, thus preventing the built-up hydraulic pressure from being relieved when switched from overdrive to normal. Removal of the plunger and cleaning out the blockage cured the problem.

Problem 2: OVERHEATING

Car had been running fine, with recently rebuilt engine, but for no apparent reason was starting to overheat.

Cause & Remedy: - There are many possible reasons for an Austin Healey to overheat (or for that matter any other car) and this problem alone could be the subject of a complete article.

However, because the car had, until recently, been running quite cool, a simple reason was looked for. As part of the recent re-build, a new set of contact points had been fltted to the distributor, and adjusted to the specified points gap of .014" to .016". During the first 5OOkms or so of running the plastic pad, which rubs against the distributor, cam lobes had worn, causing the points gap to be reduced to almost zero. As well as reducing the quality of spark, this also had the effect of retarding the ignition - resulting in the overheating problem encountered. The simple re-adjusting of the point's gap restored the engine to its previous condition.

Moral to this story is that whenever new points are fitted, it is a good idea to check and if necessary re-adjust the points gap after an initial settling-in period of say 300-500 kms.

Finally to follow up on Ian Howard's comments regarding potential problems from modern non-leaded fuels, including Optimax, I have also experienced some problems and will review later as further information comes to hand.

Happy Healeying,

John Dowsett.

N.S.W. AUSTRALIA Austin-Healey OWNERS CLUB FLAT CHAT

February 2001

[Healeys] An odd OD problem

From: **healeys-bounces@autox.team.net** on behalf of **Healey Bruce** (healeybruce@roadrunner.com)
Sent: Friday, 3 July 2009 3:06:44 PM
To: Healey Mail Group (Healeys@autox.team.net)

Norman Nock suggested I post my experience, as someone might find it useful. Here's the story:

My OD was intermittently engaging, sometimes not at all, and recently not at all period. On some occasions, it would cycle in and out rapidly, "chattering" in the process. In fairness, the first time if failed, I had a fried relay, and I purchased a used replacement from the Nocks. The OD worked fine for awhile. In trying to track down the recurring problem, I also purchased from the Nocks and replaced the gear selector switch and solenoid, since it acted like the solenoid was not strong enough to hold it in engaged. I also disassembled and renewed the points and adjusted the throttle position switch, replaced the dash switch and adjusted the solenoid engagement lever per Teck Talk. But I still had no OD engagement.

Finally, I put the car (a BN7) on jacks and proceeded to test and trace the entire circuit, including ground connections. The meter showed that the relay and throttle position switch functioned as they should--a relief. I had power to the gear selector switch and leaving the gear selector switch. So I started the car and tested it. First test the OD engaged. Second test it did not, so I hooked up a meter to the gear selector switch, and had no power on the downstream side with the lever in 4th. I flipped the dash switch off, depressed the throttle to open the relay, then flipped the dash switch on and the OD chattered. A friend (an electrician--I needed all the help I could get) who was helping me saw the lever on the right side of the OD jumping up and down. I immediately reached for the gear lever to pop it out of gear and when I grabbed the lever the OD engaged. I turned off the engine and reconnected the meter to the downstream side of the gear switch. Wiggling the gear lever caused an intermittent break in the circuit. If I held the lever firmly to the right in 3rd or 4th, I had current and the OD engaged. If I jiggled it to the left WHILE STILL IN GEAR, I had an open or rapidly intermittent circuit--which explained the chattering. The problem? The fiber washer on the gear selector switch gave just that much too much clearance to prevent the switch from being firmly closed by the gear lever when in the 3rd/4th slot.

I don't know if anyone else has had a similar problem, but I removed the fiber washer and used a generous amount of Teflon tape on the threads of the switch and it tested perfectly. So I hope I've contributed to the collective knowledge base. Thanks for both your (Norman's) input by phone and the info in Tech Talk.

Bruce Steele ©
1960 BN7
Brea, CA

This is for a centre change gearbox, but it may help tracing similar faults on the BN1 & 2 gearboxes.

Don Hardie

REAL HEALEY NATTER

OVERDRIVE EXTRA RELAY

If any BN 1 owner out there still has the overdrive centrifugal switch connected, then here is a modification that may help you. As most know this switch is prone to disconnect the overdrive at high speed, this problem hapened to me some time ago and on checking the points inside the switch they were found to be burnt and pitted. They were cleaned up and a relay used to take the heavy load off them, all they do now is operate the relay with a very low amperage so they shouldn't burn again.

This seems to have cured the problem as I have travelled over 7,000 miles since and it hasn't surfaced again.

WIRING DIAGRAM

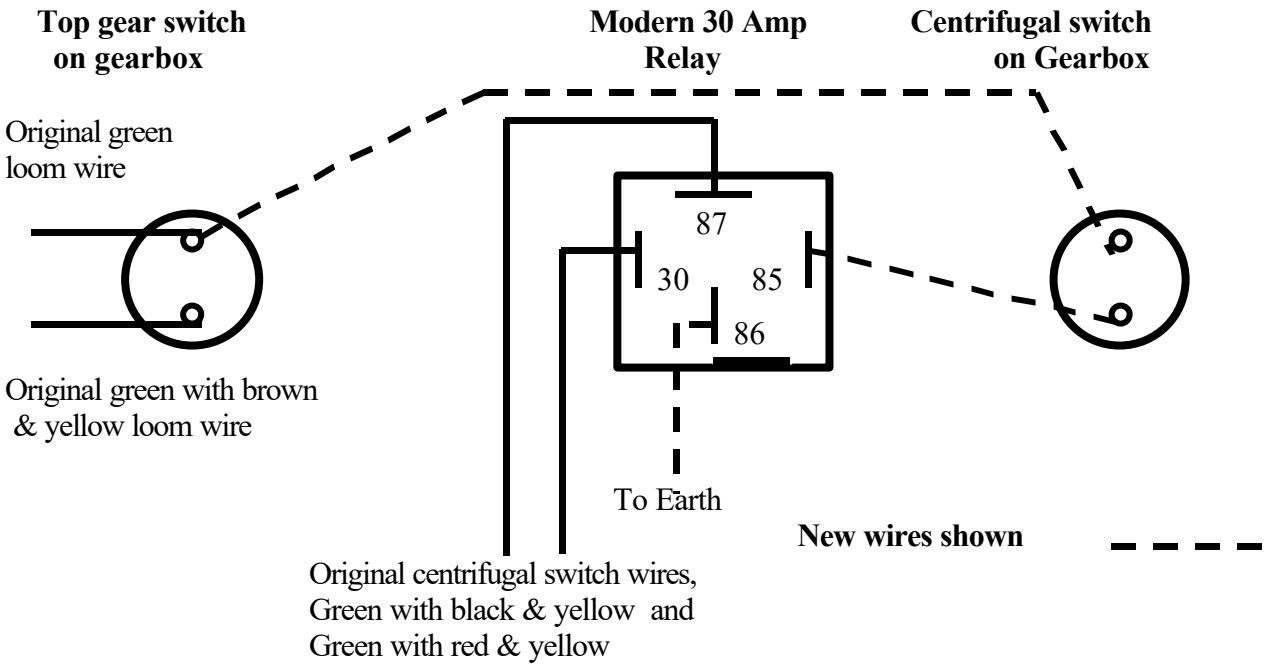

062
(THE HARDIES 100)

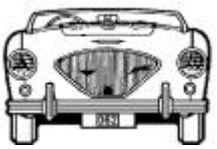

PS. Give it a try and if at first you do succeed try not to look surprised.

INTERNET DOWNLOAD
OVERDRIVE HANDBOOK

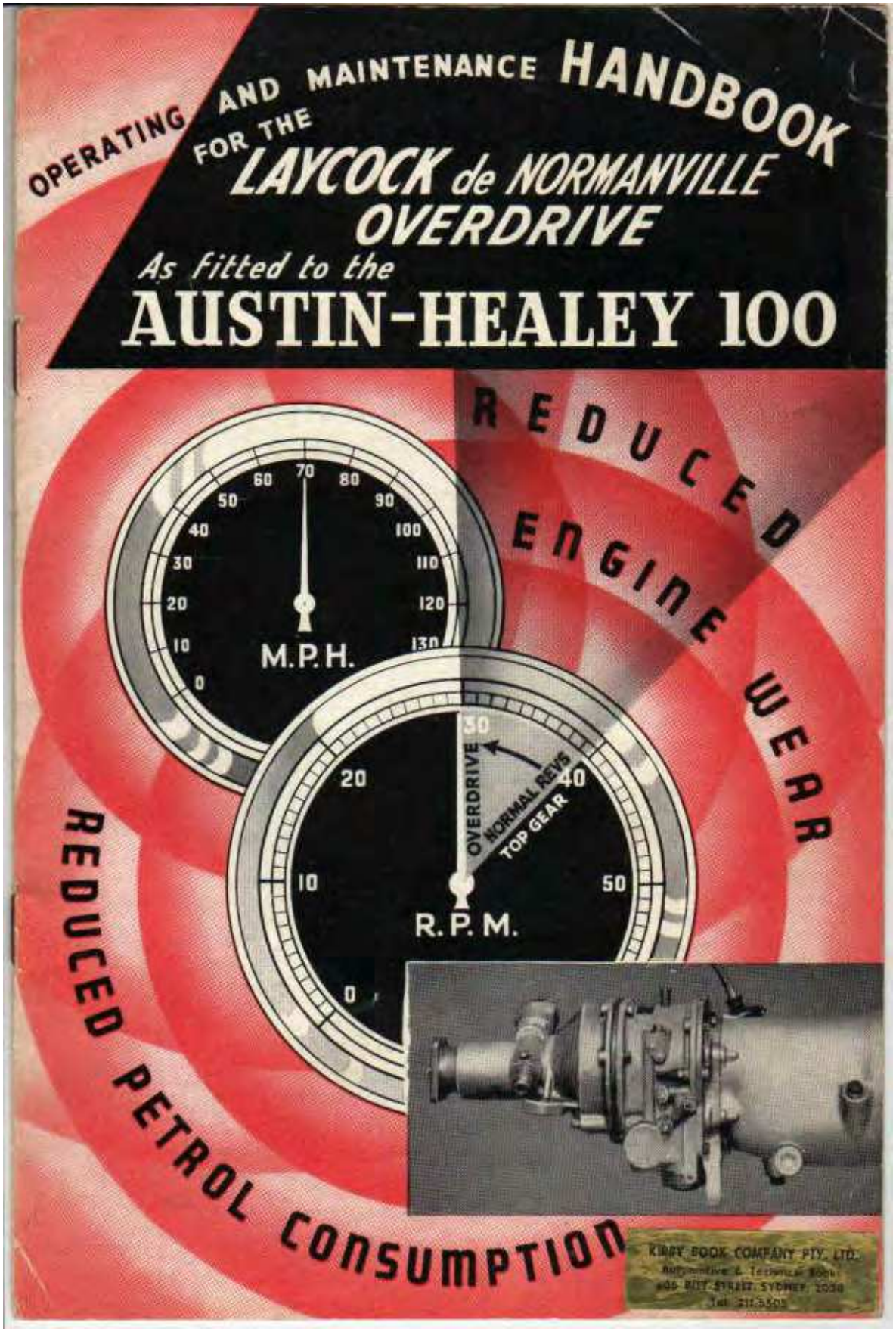

The Laycock-de No

"tops" the top gear—giving higher cruising spe

DESCRIPTION

The Laycock-de Normanville Overdrive unit comprises a hydraulically controlled epicyclic gear, housed in a casing which is directly attached to an extension at the rear of the gearbox.

When brought into operation, the overdrive reduces the engine speed in relation to the road speed. This permits high road speeds with low engine revolutions resulting in considerable fuel economy and reduced engine wear.

OPERATION

The overdrive operates in 2nd and top gears and is brought into operation automatically at approximately 40 m.p.h. (64 k.p.h.) by an electrical centrifugal governor and solenoid. On deceleration the overdrive remains in engagement but at speeds below 30 m.p.h. (48 k.p.h.) automatically disengages when the throttle is opened for acceleration. A further switch operated by the gear lever prevents engagement of the overdrive when either 1st gear or reverse is required.

Manual Switch.

Manual Switch. A switch mounted centrally on the fascia panel provides a means for the driver to override the automatic control at speeds in excess of 30 m.p.h. (48 k.p.h.) providing the throttle is more than one-fifth open.

DRIVING.

For **normal cruising** in open country the manual switch should be placed in the DOWN position to allow the overdrive to come into operation.

To meet any **sudden power demand** (such as for hill climbing or overtaking), when the overdrive is in operation, the manual switch can be placed in the CENTRAL position to bring the car into the normal top gear ratio.

The following table gives the relationship between engine revolutions per minute to road speed in miles and kilometres per hour for the various gears ; the top gear column is divided to show the comparative engine revolutions with and without the overdrive in operation.

rmanville Overdrive

eds, or reduced r.p.m. for a given road speed.

ROAD SPEED		ENGINE REVOLUTIONS PER MINUTE				
K.P.H.	M.P.H.	1st	2nd Norm.	2nd +OD.	Top Norm.	Top +OD.
16	10	1250	790	—	558	—
32	20	2500	1580	—	1116	—
48	30	3750	2370	—	1674	—
64	40	5000	3160	2460	2232	1735
80	50		3950	3070	2790	2170
96	60		4790	3680	3348	2605
112	70			4290	3906	3040
128	80			4900	4464	3475
144	90				5022	3910
160	100					4345
176	110					4780

MAINTENANCE

The lubricating oil for the overdrive unit is common with that in the gearbox. To check the oil level, take out the inspection panel in the right-hand side of the gearbox cover when the filler plug will be accessible.

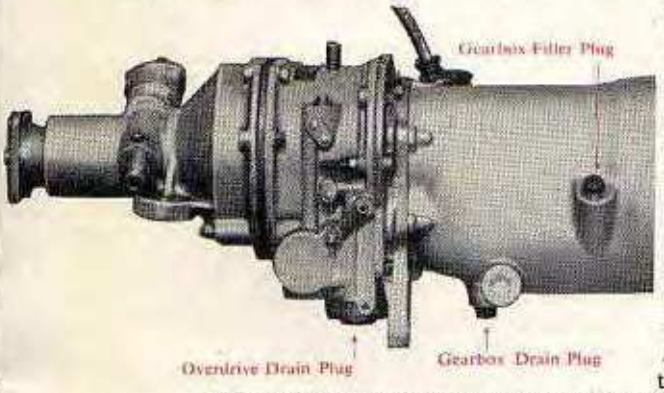

Every 1,000 miles (1,600 kilometers) check the oil level of gearbox and overdrive, and if necessary top-up to the base of the filler plug threads with the recommended grade of oil.

Every 6,000 miles (9,600 kilometres) drain and refill the gearbox and overdrive units. Two drain plugs, one for the gearbox and one for the overdrive unit, are situated at the base of their respective casings. Drain when the oil is warm, after a run, and refill to the level of the filler plug with new oil.

After refilling the gearbox and overdrive with oil, re-check the level after the car has been run, as a certain amount of oil will be retained in the hydraulic system of the overdrive.

Every 6,000 miles (9,600 kilometres) after draining the oil, remove the overdrive oil pump filter and clean the filter gauze by washing in petrol. The filter is accessible through the drain plug hole and is secured by a central setbolt.

RECOMMENDED LUBRICANTS.

	Vacuum. Mobiloil. A	Wakefield Castrol. XL.	Shell. X-100 30.	Esso. Essolube. 30.	B.P. Energol. Energol. 30.	Duckham's N.O.L. "Thirty"	S.A.E. Viscosity. 30.
				Imp. Pints.	U.S. Pints.		Litres.
Gearbox and Overdrive-oil capacity				4½	5.35		2.55

Important.

It is most essential that absolute cleanliness is exercised when filling the gearbox and overdrive units with lubricating oil, as any foreign matter that enters may seriously affect the hydraulic operation of the overdrive.

The oil in the gearbox and overdrive units must always be kept " topped up " to the correct level, otherwise the operation of the overdrive will be affected.

The Laycock-de No

How it

Fig. 1

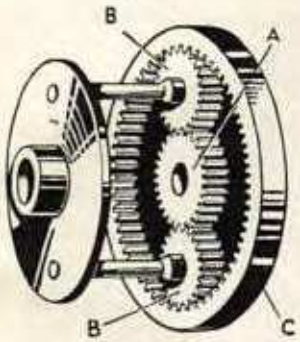

The principle of operation of this unit is simple. Basically it comprises an epicyclic gear train ; see Fig. 1, consisting of a sun wheel (A), planet wheels (B) which revolve around the sun wheel, and an outer ring, the annulus (C) cut with gear teeth on the inside. Also there is a hydraulic pump, a hydraulic accumulator or pressure storage chamber, and a uni-directional roller clutch.

This clutch operates as follows. The driving shaft from the gear box carries the inner member on which are cut a number of inclined surfaces. The annulus or outer ring of the epicyclic gear train, which is attached to the propellor shaft carries the outer member.

Between the two are a number of rollers.

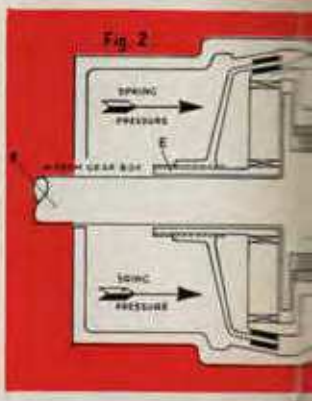

When in direct top gear (see Fig. 2) the overdrive is, of course, inoperative. The drive from the gearbox to the propellor shaft is taken through the rollers (A) from the gearbox main driving shaft (B) to the outer member of the uni-directional clutch (C), and so direct drive is transmitted.

It will be remembered that the Roller Clutch drives in one direction only, and therefore if the car were to over-run the engine, the rollers would be pushed down the inclined surfaces away from the annulus or output member and the drive broken, leaving the car without engine resistance to assist braking. This problem is overcome by means of a cone clutch (D).

rmanville Overdrive

works

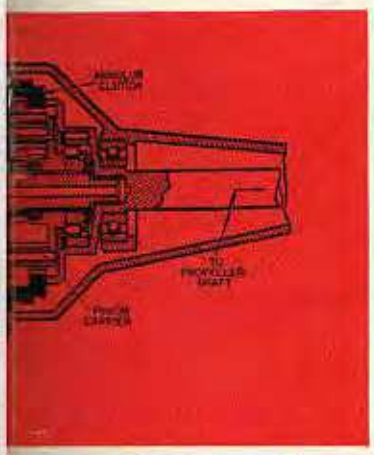

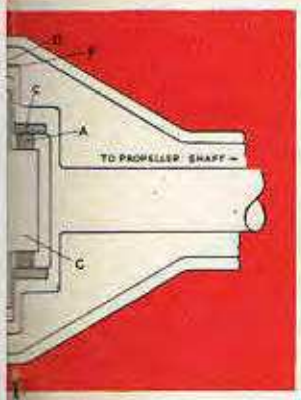

This clutch slides on the sun wheel splined extension (E) and it is pushed by springs to engage with the corresponding cone of the annulus (F). This, therefore, locks the sun wheel to the annulus. Between the annulus and the sun wheel are the planet wheels which are carried by the Planet Carrier (G) (Fig. 2) which is mounted on the Driving Shaft (B). The planet wheels are therefore also locked and resistance to over-run is provided by the engine through the gear box and main drive shaft to the planet wheels.

When overdrive is engaged a valve in the unit is opened. Hydraulic pressure contained in the accumulator is thereby applied to two pistons. These pistons operate on the cone clutch member, overcoming the spring pressure and pushing the cone member away from the annulus and against a conical brake ring (A) Fig. 3, built into the main casing.

The sun wheel carries the cone clutch (B), Fig. 3, and is free to rotate on the mainshaft. Therefore, when the cone clutch makes contact with the brake ring (A) it brings the sun wheel to rest and holds it stationary.

The planet carrier and planet wheels are now driven round the stationary sun wheel, causing the annulus to be overdriven at a higher speed than the driving shaft.

In overdrive the outer member of the free wheel over-runs the inner member. Engine braking is provided by the sun wheel being prevented by the cone clutch from rotating in either direction.

The Laycock-de No

Detailed Techn

On these two pages we show a cut-away drawing of the Overdrive and a more detailed technical description of its working.

It will be seen that the input shaft (D) carries first of all a cam (C) operating a plunger type hydraulic pump (G) which builds up pressure against a spring loaded piston (F) in an accumulator cylinder placed across the bottom of the main casing (H).

Further back on shaft (D) there is a sun wheel (O) in one piece with a splined sleeve (M) which is free to rotate on shaft (D). Immediately behind the sun wheel and splined to the shaft (D) is a planet carrier (N) in which are mounted the planet wheels (T).

Finally, also splined to the shaft (D) is the inner member (S) of a uni-directional roller clutch which is the driving member in direct gear. The drive is via the shaft (D) the inner member (S) rollers (P) which are forced by spring pressure up inclined faces (R) and wedge between the inner member (S) and the outer member (W) the latter being attached to the combined annulus (U) and output shaft (Q).

Slidably mounted on the splined sleeve (M) is a double cone clutch (K) which, under the influence of springs (V) is pushed to the rear so that its inner lining (L) is in contact with the corresponding cone on annulus (U) thus preventing a freewheel condition when the car tries to overrun the engine. Engine braking is, therefore, always available.

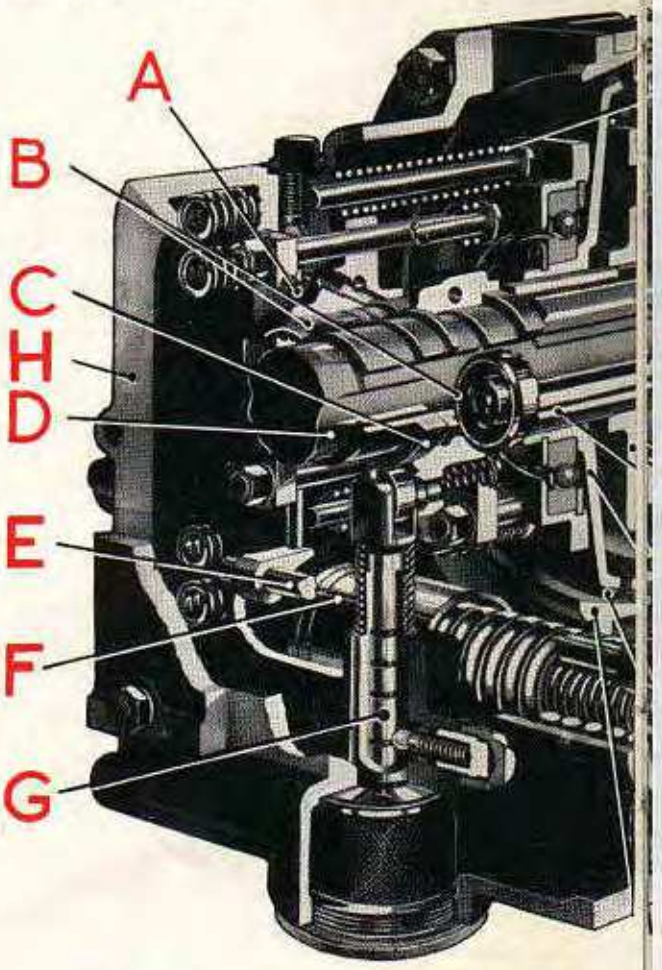

In addition the clutch (K.L.U.) drives the car when in reverse gear which obviously the uni-directional roller clutch cannot do.

To change into overdrive, the operating shaft (E) is rotated a small amount by the operation of the solenoid. This lifts the operating valve (A) allowing the

rmanville Overdrive

ical Description

stored hydraulic pressure in the accumulator to be applied to two pistons (B). These pistons (B) now move the clutch (K) forward away from the annulus (U) overcoming the springs (V). During the forward movement of the clutch (K) the drive from the engine to the wheels is maintained by the roller clutch.

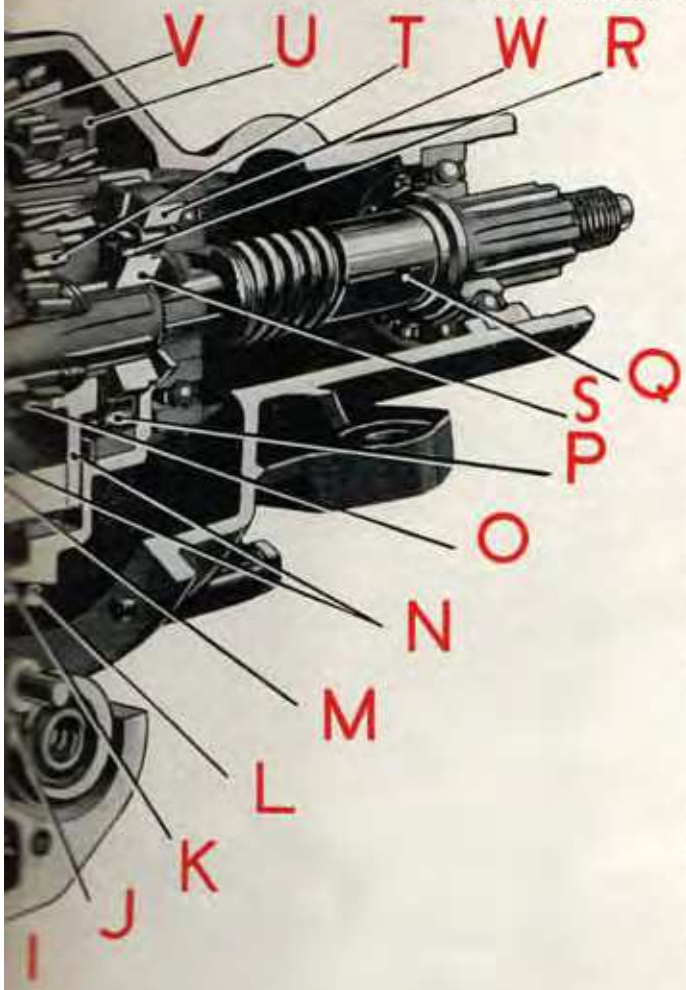

On completion of its forward movement, the outer lining (J) of the cone clutch (K) contacts the brake ring (I). Pistons (B) exert pressure not only sufficient to overcome springs (V) but also to bring clutch (K) together with sunwheel (O) to rest. Note that clutch (K.J.I.) being oil immersed comes to rest perfectly smoothly without shock.

The drive is now via shaft (D) to planet carrier (N) which by rotating the planet wheel (T) round the stationary sunwheel (O) causes the annulus (U) and output shaft (Q) to be driven faster than the input shaft (D). In this condition the outer member (W) of the roller clutch overruns the inner member (S). Because the sun wheel can move neither backwards or forwards there is always engine braking available in overdrive gear.

To change down to direct gear for acceleration, the accelerator pedal is held depressed and valve (A) released. This cuts off the hydraulic pressure to pistons (B) and springs (V) again take charge breaking the contact of clutch (K.J.I.). The load on the engine is therefore relieved and it is consequently able to accelerate until the inner member (S) of the roller clutch reaches the speed of the outer member (W) and direct drive is taken up in perfect synchronisation. Finally the contact of clutch (K.L.U.) is completed so that engine braking is available when required.

The Only Clutchless Sustained Power Overdrive has come to stay

Here is evidence of efficiency——

Extract from

" MOTOR " Road test 8/52 May 28/1952, of a current production car of 2,088 c.c.

FUEL CONSUMPTION.

	Direct top	In overdrive
	M.P.G.	M.P.G.
Car driven at constant 30 m.p.h.	29.5	33 = 11%
" " " " 40 m.p.h.	27.0	31.5 = 16½%
" " " " 50 m.p.h.	24.0	29.5 = 23%
" " " " 60 m.p.h.	21.0	25.0 = 19%
" " " " 70 m.p.h.	17.5	20.5 = 17%

Here is evidence of Stamina :—

AUSTIN HEALEY 100 broke 117 International and American Stock Car Records at Bonneville Salt Flats, U.S.A., September 1953. Highlights—24 hours continuously at 104.3 miles per hour. Petrol consumption 21 m.p.g. Measured Mile 142.6 m.p.h. Laycock de Normanville Overdrive was used continuously on these runs.

WHAT THE CUSTOMER SAYS :—

Mr. Barney Clark writing in the American Motoring Journal " Auto Sport Review " BUT THE REAL DELIGHT IN THE AUSTIN-HEALEY IS THE LAYCOCK-DE NORMANVILLE OVERDRIVE. Unlike anything in America, this unit is controlled by a toggle switch on the dashboard and is absolutely under the driver's command. Set at ' Overdrive ' position it shifts itself up or down—instantly—at road speeds of about 40 m.p.h. But at any time the driver can pop the switch back to ' Normal ' and get it—instantly—with throttle wide open or shut and without using the clutch. The shift is really instantaneous and there is NO free-wheeling effect in either ratio. Here's an example of how it works :— You are pottering along the highway in overdrive at about 50, trailing another car. A hole opens up in the on-coming traffic and you give it the gun, throttle right into the floor. As you start swinging out, you flick the switch into ' Normal ' and—bam!—you're in another gear and the revs start climbing like a rocket. As soon as you have a healthy supply of r.p.m., you flick the switch back up into ' Overdrive ' and—bam!—you're back in top ratio and those extra revs hit the rear wheels like a mule's kick. There is no ' clunk ' as the shifts take place and the only indication you have is the sudden change in ratio. Real good ! This works in 2nd and top gears so you actually have five speeds forward.'

Laycock-de Normanville Overdrive

MANUFACTURED BY

LAYCOCK ENGINEERING Ltd., MILLHOUSES, SHEFFIELD 8, ENG.

Under exclusive licence from
AUTO TRANSMISSIONS LTD., COVENTRY.

Phone : Sheffield 74411
Grams : " Invention," Sheffield

JOHN HARPER'S ARTICLES
No 9
Feedback

I get a fair number of requests for information and assistance from owners of six cylinder cars. Whilst I will make every effort to help where I can I feel it necessary to remind readers that this series of articles is about four cylinder BNl and BN2 100s, and the reasons why I can only give limited help with the six cylinder cars are:

I don't own any model other than the four cylinder 100.

I have not specifically set out to create a library on other models.

Last, but by no means least, there are many owners of other models around with considerably more knowledge and experience than I have.

If you need technical assistance with a 100/6 or 3000 then you would be best advised to do what was suggested on page 52 of the April Rev Counter, and contact your Centre Technical Secretary or National Register Secretary.

Overdrive Solenoid

The Lucas operating solenoid fitted to the side of the 100 overdrive assembly has two windings. The heavy one takes approximately 20 amps to move the armature and hydraulic valve against a spring. This then allows the oil under high pressure to enter the main operating cylinders and thus make the unit function in overdrive mode.

The second coil takes only two or three amps and is there solely to hold the armature in the fully engaged position. The heavy current coil is disconnected as soon as the armature is fully engaged by a switch located in the top of the unit.

A problem that is often encountered on all but the early 100s is that the armature drops down too low for the heavy current coil to produce sufficient magnetism to lift it. It therefore "sticks" in the low position, sometimes occasionally and sometimes every time. If it is left in this condition too long it will over heat and possibly burn out.

The usual reason is that a small rubber buffer fitted into the side plate as a lower stop for the armature has either perished, been deformed or fallen out. This design is rather poor and this open, non-adjustable arrangement was presumably a cost cutting measure, which didn't really succeed. Early 100s and later "A" type overdrives, such as those fitted to 3000s and Triumph 2000s had an enclosed system and a positive adjustment mechanism.

JOHN HARPER'S ARTICLES
No 9

The compromise that I have found effective is to tap out the hole where the rubber buffer is located and fit a set screw and locknut. The screw should be adjusted to give approximately 150 thousandths of an inch clearance when the armature is fully engaged, hence the armature is always well within the influence of the magnetic field produced by the high current winding. There is a further improvement that could be made. The original solenoid type TGS1 part number Luc-as 76505 or 76510 had a Y2" diameter armature (plunger). Later versions type 11S part number 76515 have a 9/16" diameter armature, and are that little bit stronger and open the hydraulic valve just that bit quicker. Obviously solenoids and armatures of different diameter cannot be mixed.

Propeller Shaft

The propeller shaft as used on the 100 is described technically as a double Hooke's joint. The significant point about this type of drive shaft is that the rotational speed of the centre portion fluctuates twice per revolution. The extent of the fluctuation depending on the angle between the driving and driven shaft. This fluctuation is cancelled out by the second joint so long as the rear axle pinion shaft Ls parallel with the overdrive shaft and the propeller shaft joints are "in phase". The first point depends on the correct fitment of the rear axle as detailed in the April Rev Counter. The second is not a problem if the propeller shaft is the original and assembled correctly. To make this easy the manufacturers have added pointers on the fixed and sliding parts of the splined area. These must be aligned to point directly at each other. If they don't the output speed of the shaft will fluctuate at twice per revolution as explained above. This in turn will cause unpleasant vibration, which, if not corrected, can cause damage.

As a rough check, the two end flanges must have their yokes in exactly the same plane. These points only apply if the propeller shaft is original. The shaft is manufactured as a matched unit and it is unwise to try and fit say a female splined end from another shaft. The phasing may look alright if the two parts of the spline are aligned to position the yokes in the same plane, but this may not be accurate and vibration may still occur. During manufacture the propeller shafts are balanced as an assembly. If subsequently a different end is fitted, the whole unit may be out of balance creating yet another potential source of vibration.

Balance should not be upset if you are only replacing the joint bearing assembly with a reputable manufacturers' part. However, a worn joint is quite likely to show first a vibration problem and it should not be left too long before being changed as the yokes can easily become worn or damaged in these circumstances.

The replacement joint should have a grease nipple fitted, but if a sealed type is all that is available then this can be used without much concern. The sealed versions are recommended on later cars as replacements in situations where the shaft "flexes' in use, but not on virtually straight running applications. Don't ask me why!

JOHN HARPER'S ARTICLES
No 9

Three different propeller shafts were fitted during the production of the 100. In most cases the Austin/BMC part number is stamped on the smooth part of the shaft into which the fixed part of the spline is machined. This is the same area as one of the alignment pointers mentioned above. By rights the correct propeller shaft should be fitted as detailed in the parts list. In practice it may be possible to fit one of the alternatives to a given car. It is important however, to first check that in the normally fitted position, there is about the same free movement along the spline both forward and backward. If not don't risk it as problems could be encountered.

DISCLAIMER: Whilst every effort is made to check the information incorporated in this series, no responsibility can be accepted for errors. However, corrections, improvements, suggestions & additional information will be very welcome (in writing please).

 To contact the author please write to him at: 7 Cedar Avenue, Ickleford, Hitchin, Herts. SG5 3XU. or Telephone 0462-51970.

.

Adapting an MGB Rack & Pinion Steering into a Healey 100-4.
This design will adapt to a 100-6 with minor modifications.

Sketches by Greg Greathouse ©

RACK AND PINION STEERING FOR AUSTIN HEALEY 100-4

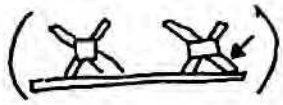

1. REMOVE LOWER RIGHT HAND "X" BRACE FROM UPPER FRONT CROSSMEMBER (VIEWED FROM FRONT OF CAR).
2. REMOVE STEERING BOX AND FRAME SECTION WHICH SECURES IT.
3. REMOVE IDLER ARM ASSEMBLY AND FRAME SECTION WHICH SECURES IT.
4. WELD SHORT STEEL TABS ONTO EACH FRAME SUSPENSION TOWER TO SECURE BRAKE FLEX/RIGID UNIONS
5. INSTALL RACK & PINION BRACKETS WITH RACK ATTACHED. BRACKETS ARE SLIGHTLY LONG WHERE THEY ATTACH TO FRAME (CUT/GRIND FOR FIT). STEERING SHAFT IS POSITIONED SO IT JUST CLEARS THE UPPER CROSSMEMBER AND ANGLES TOWARD THE DRIVERS SIDE INNER FENDER PANEL. OBTAIN A SUITABLE U-JOINT (3/4" I.D) AND PILLAR BLOCK TYPE BEARING SUPPORT WHICH MOUNTS ON INNER FENDER PANEL WITH ALUMINUM SPACER TO FIT. DRIVERS SIDE TIE ROD ARM WILL BE SHORTENED AND PASSENGER SIDE WILL BE LENGTHENED. AFTER RACK BRACKETS ARE WELDED IN, WELD A SHORT BRACE (1/8" x 1" STRAP) TO FRONT CONTROL ARM BRACKET ON EACH SIDE.
6. REMOVE STEERING ARMS FROM SPINDLE-UPRIGHT ASSEMBLIES; CHOP AND RAISE EACH ARM UP 2". MAKE CUT IN STEERING ARM 3" IN FROM FRONT EDGE. AFTER CUT/WELD ARMS SHOULD BE RE-HEAT TREATED.

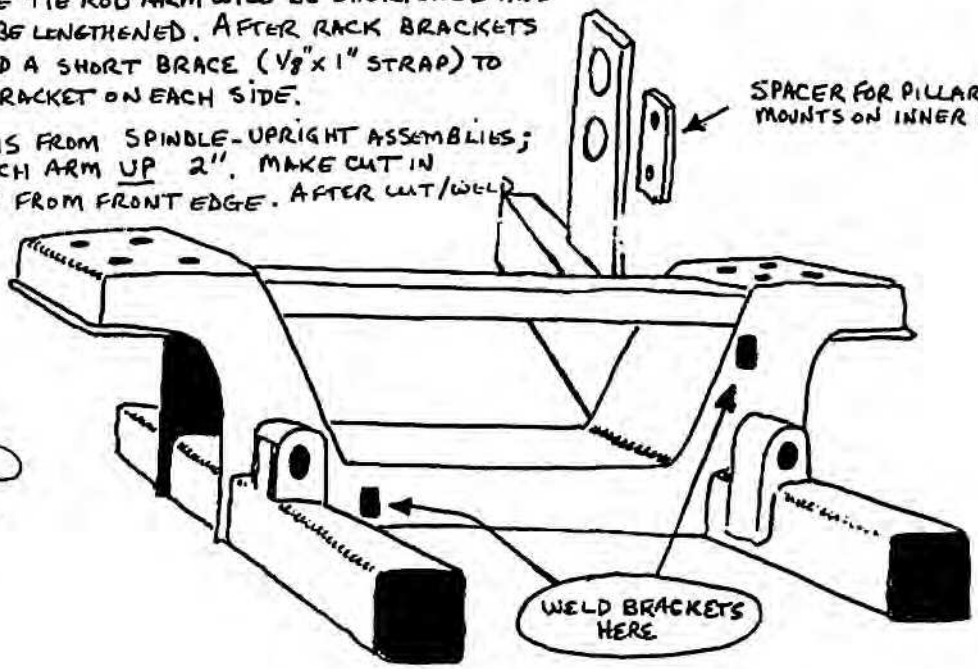

Fabulous work for a crafty car too
Mr Minnie
Greg

USE MGB RACK & PINION ASSEMBLY

THIS UNIT HAS THE STEERING SHAFT AT AN ANGLE TOWARDS THE INNER FENDER PANEL. TIE ROD ENDS WILL FIT THE HEALEY STEERING ARMS. STEERING SHAFT WILL BE SHORTENED TO APPROXIMATELY 9 1/2 INCHES. MGB SHAFT IS SAME DIAMETER AS THE HEALEY INNER SHAFT - 3/4" O.D.

NOTE: - Remember this design is for LHD you will have to work out to adapt it to RHD

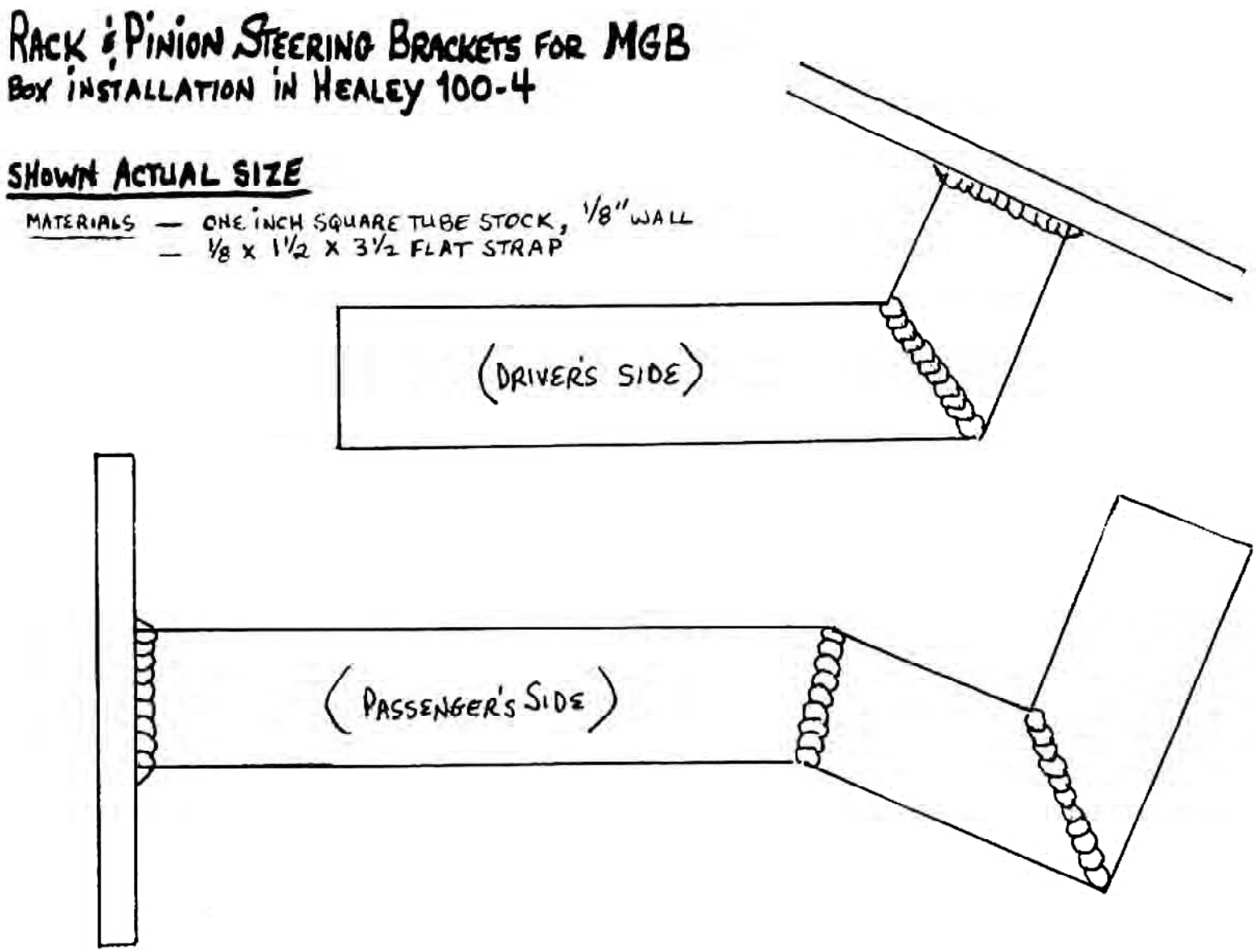

NOTE: -This diagram has been copied from the Internet and probably is way out of scale. The square tube is 1" x 1" so it should be easy for you to work it out

TECHNICAL REPORT

Overdrive Throttle Switch Adjustment

By Roger Moment

Problem:

My 0/D engages fine, but doesn't want to disengage either for several minutes after the switch is flipped or until I cut the ignition for a second.

Answer:

Your overdrive may be working exactly right!!! The purpose of the overdrive throttle switch is to PREVENT the overdrive from shifting out unless you have about 1/3 throttle. Thus, if you flip the 0/D switch with your foot off the throttle, the 0/D should stay engaged, as you depress the throttle you should have it kick out. If you bypass or misadjust the throttle switch so that you kick out of 0/D with your foot off the gas (i.e. with the engine braking using compression), you risk breaking the internal unidirectional clutch in the 0/D and, because this consists of hardened steel rollers and bits, if it breaks the metal bits will thoroughly trash out much of your 0/D internals including the transmission /0/D drive shaft, gears, rear 0/D output rotating gear/shaft etc.

Read the shop manual carefully about how to adjust the throttle switch. An ohmmeter helps, along with a good ear and patience. The switch box actually contains a cam, which is rotated by the lever that shows outside the switch box. **You can rotate the cam too far so that its action is reversed from what it should be.**

If you loosen the lever clamping screw and turn the shaft with a screwdriver (I strongly suggest turning the battery switch off since power to the ohm meter will trash it and you will be working close to the fuse block and risk shorting to it with your screwdriver) you should see the resistance go from infinite to zero to infinite as you turn the screw counter clockwise. With the throttle off, and the lever at its top position, you should have low resistance (actually zero if you disconnect the two wires to the switch). As the lever moves downward (in response to applying the throttle) there will be a point where the resistance jumps to infinite indicating breaking of an internal contact. This position should coincide with about 1/3 throttle and the clamp should be tightened onto the shaft.

You can check the setting by having someone depress the throttle and note the amount of travel when the ohmmeter indicates breaking contact.

I would guess that I have seen only one in ten 0/D switches set correctly and that almost all failures of internal parts can be traced to cars shifting out of overdrive under engine braking because the switch was set wrong.

TECHNICAL REPORT (Part)

OVERHEATING

Car had been running fine, with recently rebuilt engine, but for no apparent reason was starting to overheat

Cause & Remedy: - There are many possible reasons for an Austin Healey to overheat (or for that matter any other car) and this problem alone could be the subject of a complete article.

However, because the car had, until recently, been running quite cool, a simple reason was looked for. As part of the recent re-build, a new set of contact points had been fltted to the distributor, and adjusted to the specified points gap of .014" to .016". During the first 5OOkms or so of running the plastic pad, which rubs against the distributor, cam lobes had worn, causing the points gap to be reduced to almost zero. As well as reducing the quality of spark, this also had the effect of retarding the ignition - resulting in the overheating problem encountered. The simple re-adjusting of the point's gap restored the engine to its previous condition.

Moral to this story is that whenever new points are fitted, it is a good idea to check and if necessary re-adjust the points gap after an initial settling-in period of say 300-500 kms.

Finally to follow up on Ian Howard's comments regarding potential problems from modern non-leaded fuels, including Optimax, I have also experienced some problems and will review later as further information comes to hand.

Happy Healeying,

John Dowsett.

N.S.W. AUSTRALIA Austin-Healey OWNERS CLUB FLAT CHAT

ebruary 2001

TECHNICAL REPORT

OVERHEATING

With summer just around the corner, this month I thought I would talk about possible causes and remedies for engine overheating. Like many mechanical problems, there is no single remedy, or "magic bullet"; rather there are a number of key areas that should be investigated.

Before rushing out to get a new or re-conditioned radiator, or fitting a "Texas fan", the first thing to do is to check the general tune of your engine. Remember, an inefficient motor will convert less of the heat value or the fuel into usable energy, and the remaining heat has to be got rid of by the cooling system, which in an Austin Healey is marginal at best.

Check the following: -

1) **Engine Compression -** Should be reasonably equal across all cylinders, with a maximum variation of about 10 psi. Typical values are usually from 150 psi to 170 psi, sometimes higher on competition engines. One or more cylinders with significantly low compression could indicate broken rings, burnt valves, or even a blown head gasket,

2) **Ignition System -** A well set-up ignition system should deliver an adequate spark at the spark plug at precisely the correct time over a fluctuating range of engine speeds and loads.
Check -Points gaps, spark plugs, ignition timing, mechanical and vacuum advance systems and condition of high tension wires.

Also, just by driving the car, you should be satisfied that the engine is pulling evenly, with no pinging, hesitation, or misfiring.

FUEL SYSTEM

The purpose of the fuel system is basically straightforward; to deliver the correct amount of fuel/air mixture to each cylinder, properly atomised, ready for ignition. A lean mixture from one or more carburettors can cause overheating by generating excessive heat in the combustion chambers and in extreme cases can even cause valves to burn and piston tops to melt.

A lean mixture is usually caused by faulty carburettor adjustment, but can also be due to fuel supply problems, or air leaking into the system at manifold gaskets, cracks or holes in manifolds etc.

Check the following: -

1 Good, adequate fuel supply - fuel pump in good condition, no fuel line blockages, no leaks etc.
2) No air leaks in manifolds.
3) Correct fuel level in float bowls.
4) No excessive air leaks at butterfly shaft bushes.
5) Butterfly valves in all carburettors properly synchronised and adjusted to supply an equal amount of air at idle.
6) Suction chamber pistons clean and freely operating,
7) Carburettor jets adjusted to give proper richness at each carburettor - not too rich, not too lean.
8) Oil in dash pots.

More next month.

Happy Healeying
John Dowsett

N.S.W. AUSTRALIA Austin-Healey OWNERS CLUB FLAT CHAT **October 2001**

TECHNICAL REPORT

OVERHEATING

Okay so you've checked your car thoroughly – mechanical condition, fuel system and ignition – and the rascal still overheats. What to do now?

Well. First of all, there are two common types of overheating - which is yours?

Possibly the worst condition is that whether you are cruising at speed, driving gently or just idling, the darn thing just wants to boil its head off or at least push the needle into the danger zone on the gauge. In this case the reason is most probably a dirty radiator there's no alternative but to remove your radiator and to get your friendly radiator man to clean and test it and in extreme cases to re-core it. If you do get a new core fitted, it's a good idea to spend a little extra on a 5 row core instead of the original 4 row one. This will give a little extra reserve capacity in future.

Unless your car is a concourse vehicle, you might consider fitting a new stem to take a modern short-stem radiator cap. Before removing the offending radiator from the car, drain the water, remove the cap, and look at the top of the core with the aid of a torch - you will probably see all sorts of rubbish, rust flakes etc sitting on top of the core and blocking the water flow. The reason I say the problem is most probably your radiator, is that on rare occasions the overheating can be due to a faulty water pump, or even a badly calibrated temperature gauge. I once fixed an apparent overheating problem by checking the actual water temperature finding that the gauge was reading some 40 degrees F high. I corrected the gauge and - bingo – the car no longer overheated!

The other common type of overheating is when the temperature is quite OK under normal operating conditions as long as it is moving - but as soon as you stop at a red light or are limping along in stop go traffic, the needle climbs rapidly into the "very hot" end of the gauge.

This usually indicates insufficient airflow over the radiator core when the car is stationary although sometimes it can be due faulty carburettor or ignition tuning at idle, or by dirty or blocked fins stopping the airflow.
However, I am still reluctant to rush in and fit a bigger fan when this problem happens, as I have generally found that a properly tuned car, with radiator and an engine in good condition will not overheat, even in extremely hot weather at traffic lights. Hence my boring insistence on checking and double checking the basic conditions before jumping to conclusions. It's too easy to just fit a bigger fan, whilst overlooking a more basic problem.

First thing to do, check your fan belt tension and make sure the fan is operating properly.

If all else fails, there are two easy ways to increase the air flow: -

1) Replace the standard fan with an after-market example with more or bigger blades.
2) Add an electric fan in front of the radiator core, which can be switched on manually or automatically when the water temperature rises.

On 6 cylinder cars, there is a third solution, which can be adopted which is cheaper, easier, and does not detract from the originality of the car. Simply remove the metal fan blades, put them in a vice, and increase the pitch of the blades slightly by twisting with a heavy shifting spanner or similar. Don't twist too much at a time - only a few degrees of additional twist or pitch may be enough to solve your problems.

One final point - now that you have a nice clean radiator and the car is running nicely, a filter in the top radiator hose will stop any loose rust flakes and dirt coming out of the engine block and clogging up your radiator again.

Happy Healeying,

John Dowsett

N.S.W. AUSTRALIA Austin-Healey OWNERS CLUB FLAT CHAT

November 2001

TECHNICAL REPORT
OVERHEATING

For those of you who were at the A.G.M., you will know that this is my last report as Technical Officer. Congratulations to Barry Campbell, and best wishes for the coming year (or two).
As we are coming into the hot summer period, this article will outline a simple modification, which may eliminate or at least reduce overheating problems when driving in slow traffic or idling at traffic lights in your Healey.
When your distributor is correctly timed, the throttle adjusting screws are adjusted to give an idling speed of about 600 - 800 r.p.m. Under extended idling conditions in hot weather, with only the fan blades to pull air through the radiator, the radiator sometimes struggles to get rid of the heat from the fuel being burnt to keep the engine running. One obvious solution is to reduce the amount of fuel being burnt, but how can this be done without stopping the motor?
One way to do this I have found is to better utilize the vacuum advance mechanism. By repositioning the vacuum take-off point in the carburetor, the vacuum to the vacuum advance mechanism can be significantly increased at idling speed, which will advance the ignition timing at idle, which will in turn increase the idling speed, which in turn enables you to back off the throttle adjusting screws, which of course means reducing the amount of fuel being burnt and the amount of heat being built up.

NOTE: No harm is done to normal running conditions, because as soon as you open the throttle to drive away, the vacuum is broken, and the ignition timing returns to normal.

The problem with the standard carburetor set-up on a Healey is that for some reason, known only to the original designers, the vacuum take-off is located right at the butterfly, so that when the butterfly is closed at idle, it covers the vacuum hole and prevents any vacuum reaching the vacuum advance mechanism. The solution is to re-drill this hole so that it is located on the engine side of the butterfly, so that full vacuum is available at idle. An easier alternative is to connect the vacuum line direct to the inlet manifold, rather than to the carburettor. This will ensure maximum idling vacuum at all times. (This is the way that the vacuum advance was set up on most modem cars before computer black box engine controls were introduced.)

Of course it would go without saying that this modification will only be successful if all other aspects of the engine and tuning are in good condition. It will not compensate for badly set-up tuning, worn-out engine, blocked radiator etc. Other side benefits are that the tendency for the engine to "run-on" when switched off will be reduced or eliminated. Also. a properly operating and adjusted vacuum-advance will give increased fuel-efficiency and cooler running at cruising speeds and part-throttle driving.

If you think this sounds all too simple, try it! I have done so, and I guarantee it works!

Happy Healeying and thanks for listening to me for the last 2 years.

John Dowsett

N.S.W. AUSTRALIA Austin-Healey OWNERS CLUB FLAT CHAT

Date ?

PART NUMBERS FOR BNI & BN2

Battery master switch Lucas ST330
Brake Bleed Screws PBR 1953 - 54 Front and rear P4389
1955 - 56 F-P4389, R-P4433
Brake Hose PBR 1953 - 54, 1955 - 56 Front and rear S96
1954 - 55 F-586 R-561
1953 - 56 F-3700622W, R-3710622W
Brake Master Cylinder Girling 3102303 Kit SP01975. PBR Kit K66x
PBR replacement P4931 - Kit K66x
Brake Linings Better Brakes GG/42/1 – F & R with 4 stud rear end.
Brake Wheel Cylinder Girling kit 1953 - 54 F & R SP01215
1954 - 55 F-SP02049, R-SP01215
1955 F-SP0204~9, R-SP02018
1955 - 56 F-SP01215, R-SP02018
PBR Kit 1954 - 55 Front P22
Rear P1499
Boots All BN 1 – PBR – P4343
Carburettors H4 – 1 ½", needle AH2 or QW. Air filter - Burgess
Clutch Borg & Beck 9" single plate - Clutch plate B191M
Pressure Plate 42652
Throw out bearing 46890
Control Box Lucas RB 106/1
Distributor Lucas DM 2P4 Points Repco/Lorimer L14, L14V Cap BD261
Rotor BD229 Condenser LC98A
Engine Bearings Repco Con rod 4B3095 or 4B2231AL
Thrust washer 2T3168
Mains 3M3097 or 3M2234
Cam 3C3270
Engine Valves Dufor Inlet S1416 Exhaust DX1294
Cotter M1514
Gudgeon pin P823
Valve Guides Inlet UG 294 Exhaust UG 295
Seat Inserts RD 019
Fan Belt Nasco V69 Dunlop V532 (Industrial belt C 44 can be used at a pinch)
Fog Lamp (accessory) Lucas SFT 576 or SFT 700
Fuel Pump Su HP type
Fuse Box Lucas SF6
Generator Lucas C45PV5 Lorrimer Type C4SPV/5 Brush Set No. 238061
Front Bearing 6203-2RS
Handbrake Cable PBR C1397 Austin Healey 1B7361
Head Gasket 1A 270 Payen
Headlights Lucas F700 Mk VI
Heater Smiths CHS 880/11
Horns Lucas WF 1748 high and low note

King Pin Set Dufor KX65
Master Cylinder Kit – PBR – K66x
Number Plate Lamp Lucas 467/2
Overdrive Laycock de Normanville WN1260 (32.4%) or WN1292 (28.6%)
Optional close ratio 22%
Propshaft Hardy-Spicer 21 1/8", 20 ¾" or 20"
Shock Absorber Front Armstrong 1S9/10R or 1S9/10RXP
Rear Armstrong DAS9R
Side Lights Lucas Type 488 - frosted lens
Solenoid Starter Switch Lucas ST950 Lorrimer ~SS7
Spot Lamp (accessory) Lucas SLR 576 or SLR 700
Starter Button SS5
Starter Motor Lucas M418PG Lorrimer Type M45G Brush Set No. 255659
Steering Box & Idler Seals PR 3189
" **Wheel** Bluemels 16 ½" diameter
Stop Light Switch PBR P1201A
Switches Panel 10A
Lights PPG1
Wiper PS7/2
Ignition S45
Steering column control~CC1
Dipper FS 22/1 Lorrimer DS 4
Tail Lights Lucas 488
Thermostat 73 Deg C
Tridon - TT 2028
Valve Regrind Gaskets VRS270H Payen
Water Pump Original kit WYLOOS4 Seal kit SK28
Wibroc kit WS521 Seal kit SG28
Bearings LJ 5/8 2RS
Wheel Cylinder PBR kit 1953-55 Front and rear 159S or K7145
1955 Front 155S, Rear 159S
1956 Front 155S, Rear 300S
Wheel Bearing – Front BN 1 Inner LJT 1 ¼ - Timken Cup 2523 Cone 2582 (FC 20)
Outer MJT ¾ Cup 1330 Cone 1351 (FC20)
Rear 4208
Seal 193 275 37 or TC 12147
Windscreen Wiper Motor CRT15 - BN1, DR2 - BN2 (self parking)
Wire Wheels Dunlop 4J x 15-centre lock 42W, 48 spoke,
Maximum lateral and radial eccentricity - 3/32"

PART NUMBERS FOR MY 100

WHERE I GOT MINE OR THE MANUFACTURER

ENGINE

VRS Gasket Set.....1 off 524-012 (Healey Factory)
Head Gasket.....1 off 021-056 (Healey Factory)
Manifold Gasket.....1 off 529-043 (Healey Factory)
Engine Enamel.....1 off 031-233B (Healey Factory)

HEAD

Rocker Post – W/out Tpd Hole .....3off 021-357 (Healey Factory)
Exhaust Valves .....4 off Chev 283-499 1.5 (KC's Hd/Sv)
Valve Seats .....4 off Welltite (KC's Head Serv.)
Valve Guides.....4 off S&F K-Line (KC's Head Serv.)
Valve Collet Seals .....8 off BS 203 (O'Ring) (C/Coast Brgs)
Head nuts.....11 off 310-840 (Healey Factory)
Rocker Box Rubber Seals .....2 off 682-080 (Healey Factory)
Repair External Crack .....(Metalock NSW Bankstown)

BLOCK & CRANK

Pistons .....+20 Leyland (Club Spares)
Rings.....+20 Included with pistons
Bearings

Con rod .....4B3095 -20 (Paul Corey B'Hills)

Mains .....3M3097 -10 (" " ")
Cam .....4C3270 (6 Cyl set – one not used)

Six Cylinder Harmonic Balancer (Narrow fan belt).....1 off (John Newman – Picton)

ENGINE OIL SEALS

Timing Cover.....1 off TC 12145 (C/Coast Bearings)
Rear.....1 off CR 3094 Holden (")
Tachometer Drive .....1 off C6416 (Central Coast Bearings)
CLUTCH SPIGOT Bush.....1 off 021-360 (Healey Factory)
ENGINE MOUNT – Front .....2 off 021-341 (Healey Factory)
- Rebound Rubber.....2 off 021-342 (Healey Factory)

LUBRICATION

Spin-on Filter Adaptor.....1 off 635-840 (Healey Factory)
Spin-on Filter .....1 off Z 10 Ryco

IGNITION

Ignitor Electronic Kit.....1 off LU-142
Distributor Cap.....1 off GL 267- Bosch
Coil .....1 off 12-Volt Lucas

CARBURETTORS

SU HS 6 .....2 off Rover V8
Jet .....1 off AUD9148 (Midel SU)
Jet .....1 off AUD9149 (Midel SU)
Spindle Kits.....2 off WZX1178 (Midel SU)
Needles OA8 .....2 off AUD1278 (Midel SU)
Gasket Kits .....2 off AUE812 (Midel SU)
1 ½" - 2 Hole Insulators .....2 off 372-620 (Healey Factory)
Manifold Gasket.....1 off 529-043 (Healey Factory)
Air box.....1 off Made up in the home workshop
Air box Plaque .....1 off 806-000C (Healey Factory)
4" Copex Tubing (1 Meter) .....1 off 456-130 (Healey Factory)

CABLE THROTTLE See article
3” Aluminium pulley .....1 off – Machined by Butler & Rudd
2” Aluminium pulley.....1 off – “ “ “ “ “
Rear carby bracket.....1 off Made up in the home workshop
Outer cable socket .....1 off Made up in the home workshop
3/8”W x ¾” Bolt, spring & flat washers.....1 off each
Outer cable adjuster .....1 off Pushbike brake one did nicely.
Inner and outer cable (Abt. 1M Long).....1 off Rear pushbike brake cable.
Cable clamp .....1 off AUE 34 (Midel SU)
Springs.....2 off AEC 2075 (Midel SU)
Spring bracket.....1 off Made up in the home workshop

EXHAUST
Manifold Gasket.....1 off 529-043 (Healey Factory)
Front Rubber Hanger……..1 off A1248 (Tweed Valley Auto)
Centre & Rear Rubber Hangers .....2 off MB 252856 (Mitsubishi)
Spacer Tubes.....4 off MB 059938 (Mitsubishi)
DE Exhaust Wrap.....1 off3389010102 (Revoln Racegear)
DE Locking Ties.....6 off 3389010201 (Revoln Racegear)
Muffler.....1 off H122(SandyCortis Muff B/vale)
Tail Pipe.....1 off (Healey Factory)
FUEL PUMP SU
Diaphragm Long HP (Fitted as reserve) .....1off AUB6099 (Midel SU)
For original pump -Points Dual.....1off AUB6106 (Midel SU)
- Pedestal.....1 off AUB6034 (Midel SU)
- Spindle (Pin) .....1 off AUA1435 (Midel SU
FUEL PUMP POSI-FLO
FEP 06SV……2 off (Supercheap Auto)

COOLING & VENTALATION

WATER PUMP
Bearings .....2 off RLS5–2RS (Central Coast Brgs.)
Mechanical Seal.....1 off 6E.3/4 (Wyong Brg & Seal)
Thermostat.....1 off TT 2028 - Tridon
6 Bladed Fan (Texas Cooler).....1 off 634-880 (Healey Factory)
Temperature Sender for Electric Fan.....1 off CTS 700 (Trade Parts B/vale)
6 Cylinder Pulley.....1 off (John Newman)
In-Line Blower for Cold Air Trunk.....1 off 9019 (Whitworth Marine)

CLUTCH

Spigot Bush.....1 off 021-360 (Healey Factory)
Cross Shaft Bushes.....2 off 330-460 (Healey Factory)
Clutch Plate Linings .....2 off Club Spares

GEARBOX & OVERDRIVE

Gear Lever Boot..... 1 off 680-910 (Healey Factory)
..... Or SC 222 (Southern Carbs)
Gasket Set ..... 1 off 021-054 (Healey Factory)
Bearings ..... 1 off 6206 (ABC Bearings)
..... 1 off 6308 with circlip groove
..... 1 off MJ 1¼ (ABC Bearings)
..... 1 off LJ 1¼ (ABC Bearings)
Overdrive Bearing..... 1 off 98210 (ABC Brgs B/vale)
Front Oil Seal..... 1 off PR 2229 (ABC Bearings)
Selector swivel Oil Seal..... 1 off PR 3283 (ABC Bearings)
..... Or TC 12013
Rear Oil Seal..... 1 off 520-070 (Healey Factory)
..... Or TC 12117
Rear Mounts..... 2 off 011-146 (Healey Factory)

TAILSHAFT

Universal Joints..... 2 off K5L4R (Wyong Bearings& Seals)

REAR AXLE

Pinion Seal ..... 1 off P 3066
Pinion bearings .....15250X Cup with 15100S Cone
.....3120Cup with 3188S Cone
Carrier .....2 off 140ACD (40x80x18)
Rear Hub Bearing ..... 2 off 4208B (FAG Bearings F/Forest)
Seal .....2 off P3156
..... Or TC 12147
Rear Hub bolts.....Now - BJ8

BRAKES

MASTER CYLINDER Kit..... 1 off K 66X (C/Coast Clutch/Brake)
VH 44 PBR BRAKE BOOSTER..... 1 off (A gift from a club member)
125MM X 100MM ANGLE BRACKETS ..... 2 off (Local hardware shop)
5/16” WHIT X 1” BOLTS & NUTS..... 2 off (“ “ “)
5/16” UNF NUTS..... 2 off (In stock)
5/16” SPRING WASHERS..... 4 off (“ “)
3/16” STEEL BRAKE PIPE ..... 2 METRES (Repco Wyong)
11/16” BRAKE VACUUM HOSE ..... 1 METRE (Pirtek Wyong)
NO P3 1/8” TAIL X 1/8” BSP FITTING..... 1 off (“ “)
NO 62W 3/16” PIPE X 3/8” INVERTED FLARE FITTING..4 IF REQUIRED(“ “)
NO 58S 3/16” PIPE INVERTED FLARE STEEL NUTS……4 IF REQUIRED(“ “)

FRONT DISC

DBA 138 - DISC ROTORS .....2 off (Cooper Spares Allambie Hts)
JB CAMIRA CALIPERS .....2 off (Brookvale Wreckers)
K606S CALLIPER KITS .....2 off (Cooper Spares Allambie Hts)
H1040 - BRAKE HOSES .....2 off (Warringah Brakes Brookvale)
CALLIPER BRACKETS .....2 off (Made by Daltex Ind. B/vale)
CAD PLATING CALLIPER BRACKETS ETC..... (Cremorne Plating Brookvale)
3/8" x 3" ZINC PLATED HT BSF BOLTS…..4 off (Classic Fasteners Welland Sth. Aust.)
3/8" x 2" " " " " ….4 off (")
DBA 1075 DISC PADS .....1 off (Cooper Spares Allambie Hts)
3/8" BSF NUTS.....8 off (In Stock)
3/8" SPRING WASHERS .....8 off (In Stock)
3/8" FLAT WASHERS .....8 off (In Stock)

REAR DRUM

Wheel Cylinder Cups.....4 off P 22 (C/Coast Clutch & Brake)
Wheel Cylinder Boots.....4 off P4343(Warringah Brake/Clutch)

STEERING

Moto Lita steering Wheel.....From a short of cash Jaguar owner
Boss for Moto Lita steering Wheel.....454-347 (Healey Factory)
Worm & Peg.....Club Spares
Felt Bush for top of column.....Mini Rack Felt Bush
Oil Seal - Steering Box.....1 off PR 3189
- Idler.....1 off PR 3189
.....or TC 12027

CHASSIS

FRONT SUSPENSION

Rebound Buffer.....2 off 031-279 (Healey Factory)
Fulcrum Pin –Upper.....2 off 263-440 (Healey Factory)
Bushing Upper Link .....2 off 282-310 (Healey Factory)
Bushing Lower A-Arm Inner.....8 off 021-187 (Healey Factory)
Bush Sway Bar.....2 off 682-140 (Healey Factory)
Clamp Sway Bar Bush.....2 off 263-430 (Healey Factory)
Front Wheel Bearings Outer.....2 off MJT3/4 RHP (ABC Bearings)
Timken.....2 off Cup 2523 Cone 2582 (FC 20)
Front Wheel Bearings Inner.....2 off LJT 1 ¼ RHP (ABC Bearings)
Timken.....2 off Cup 1330 Cone 1351 (FC20)
Front Wheel Bearing Seals .....2 off PR 5145 (ABC Bearings)
Or TC12162

REAR SUSPENSION

2 New Main leafs & Leaves Reset .....(Dumbrells Newcastle-(gone 2014)

REAR SHOCKABSORBER SEAL.....1 in each CR6729
Telescopic.....4 GABRIEL GUARDIAN GAS 81464

ELECTRICAL

ALTERNATOR.....1 off Lucas 18 ACR (Brookvale Wreckers)
Bearings.....2 off 6202LLU(Wyong Beargs/Seals)
Brushes.....2 off (Wyong Auto Electrical)

BODY

Bonnet Support Rubber ..... 6 off SC 211 (Healey Factory)
" " " Rivet ..... 6 off SC262 (Healey Factory)
Chrome Screw – Door Catch ..... 8 off SC 3162 (Southern Carbs)
Door Lock –RH With Knob..... 1 off 803-785 (Healey Factory)
Door Lock –LH With Knob..... 1 off 803-775 (Healey Factory)
Door Catch..... 2 off SC 145 (Southern Carbs)
Piping – Door Blue ..... 2 off SC 242C (Southern Carbs)
Bullet Door Mirror..... 1 off LA8879(Sportsparts Thornleigh)
Reflector Pod to Body Seal..... 1 Pair SC 207 (Southern Carbs)
Front Bumper..... Second Hand (Healey Factory)
Wiper Blades..... 2 off J 80926(Sportsparts Thornleigh)

TRIM

Tenax fasteners ..... (Classic Fasteners - see catalogue)
" " ..... (Nolan O'Rourke, Newcastle)

SEAT BELTS

Inertia Reel with 300mm Stalk..... 2 off (Cooper Spares)
Eye Bolts, Plates with Nuts ..... 2 off each (Revolution Racegear)

WHEELS & TYRES

Front Tyres..... 2 off Falken 165x15 (Peppers Tyres)
Rear Tyres..... 2 off Toyo 165x15 (
Front Wheel Bearings Outer ..... 2 off MJT3/4 RHP (ABC Bearings)
Timken..... 2 off Cup 1330 Cone 1351 (FC20)
" " " Inner..... 2 off LJT 1 ¼ RHP (ABC Bearings)
Timken..... 2 off Cup 2523 Cone 2582 (FC 20)
" " " Seals..... 2 off PR 5145 (ABC Bearings)
Or TC12162

DON HARDIE

SEE NEXT PAGE FOR NOLTEC URETHANE BUSH LISTING.

INTERNET DOWNLOAD

NOLTEC PARTS LISTING - AUSTIN HEALEY

AUSTIN HEALEY			Front/Rear	Bush/Kit	Part No.	Kits per Vehicle	Comments	
100/4,100/6, 3000	'54-68							
Upper control arm - outer			F	2	N51339	1	Shock link/ Incl. crush tubes	
Lower control arm - inner			F	4	N51340	1	Incl. crush tubes	
Sway bar - mount - 14mm			F	2	N21341	1	measure bar size	
Spring - front eye			R	2	N71342	1	Incl. crush tubes	
Spring - front eye			R	2	N71344	1	3000/ Incl. crush tubes	
Spring - rear eye			R	2	N71343	1	Incl. crush tubes	
Spring - rear eye & shackle			R	8	N71345	1		
Spring - sandwich pad			R	4	N71346	1		
Tramp rod			R	4	N61974	1	Incl. crush tubes	

REAL HEALEY NATTER

FEBRUARY 1997

At the barbecue in December, a request was made for details of my rear flasher modifications, they are as follows:-

Honda Civic (mid 80's) amber front mudguard repeater flashers (Part No 34300 SBO 601) were fitted to the reflector pods. A hole was drilled and filed to shape in the pod rear face for the Honda light to clip into, then a 1/2" hole drilled through the shroud just in front of the pod mounting holes and a rubber grommet fitted. The two wires were taken through and connected one to earth and the other to it's respective loom wire, which were disconnected from the stop lights. See wiring diagram alterations and photos for more detail. A new wire was required from the flasher/stoplight changeover relay on the left hand front inner guard to the stop light connectors in the boot. Norman Nock uses the existing White with Black loom wire from distributor to battery switch, see page 132 of his Tech Talk.

You may have to change the flasher unit to a modern electronic one, as the globes in the Honda flasher repeaters are only 5 watt and may not operate the original Lucas unit correctly. Barry Campbell has fitted modern innards to an original Lucas outer, see him for details.

Correct Lucas push in connectors are available at most Swap Meets, but if you are doing this conversion you aren't really interested in concourse originality, so you can use the Blue GMH type male and female (I hope no one will report me for using this non politically correct terminology) crimp on connectors which will fit the Lucas ones. The reflectors were remounted under the rear bumper bar on modified and chromed Kilmartin BJ 8 reflector brackets, Part No AH 313 R & L. Things can easily be returned to original by reconnecting the wires to their old positions and refitting the reflectors to the pods using a large washer inside to make up for the enlarged hole.

Barry Campbell commented that the 5 watt globes are hard to see in bright daylight so Quartz Halogen 5 watt BA 9s base globes have been fitted and our friendly spares supplier Tony Cooper of Cooper Spares Allambie Heights is on the track of some 10 watt ones. 20 watt are available but would probably be too bright and may be too hot for the plastic lenses. As the original globe holders were for wedge base globes these had to be changed to Motorgard MGPS19 sockets for the BA 9s base globes. The Honda body had to be relieved to allow the new holder to clip in and a portion of the plastic on the new holder was cut away for an earth wire to be soldered on. Do not handle the Quartz globes with your bare fingers, use a tissue.

DMH-000 (The Hardie's 100)

UPDATE 28 10 2002

I have just fitted 20W Quartz Halogen globes (Narva part no 17835 @ $9.95 each) and they are a lot better. I ran the blinkers for over 5 min and the plastic rear lenses didn' t get any hotter than the front glass ones, so there shouldn' t be any problem. D.H.

UPDATE 8 11 2010 - SEE LED FLASHER ARTICLE

I have now fitted LED globes and an LED Flasher Unit from http://autolumination.com/1156_1157.htm
An Eagle 5 1157Super bright at each front.
An 1895 super white ba9s bayonet base bulb at each rear.
An EFL-3 LED Flasher unit.

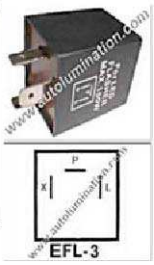

No more Lucas “candles” in the front parkers and flashers and the rear flashers are as bright as the 20W halogen globes.
D.H.

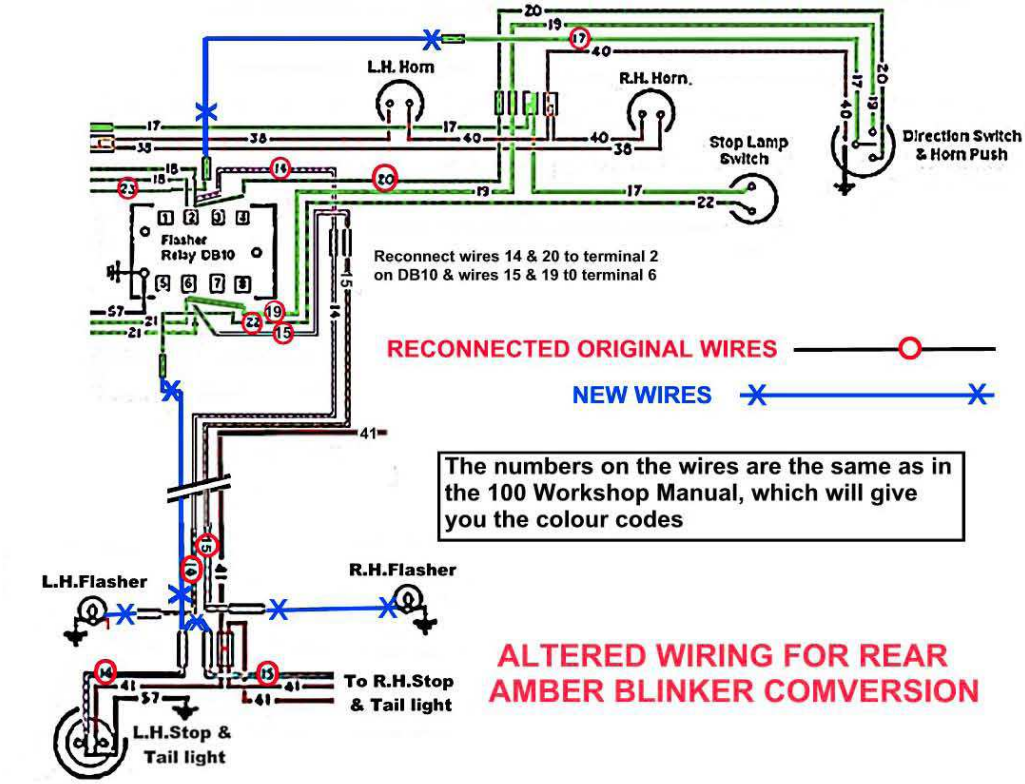
L.H. Horn
R.H. Horn.
Stop Lamp Switch
Direction Switch & Horn Push
Flasher Relay DB10
Reconnect wires 14 & 20 to terminal 2 on DB10 & wires 15 & 19 t0 terminal 6
RECONNECTED ORIGINAL WIRES
NEW WIRES
The numbers on the wires are the same as in the 100 Workshop Manual, which will give you the colour codes
L.H.Flasher
R.H.Flasher
To R.H.Stop & Tail light
L.H.Stop & Tail light
ALTERED WIRING FOR REAR AMBER BLINKER COMVERSION

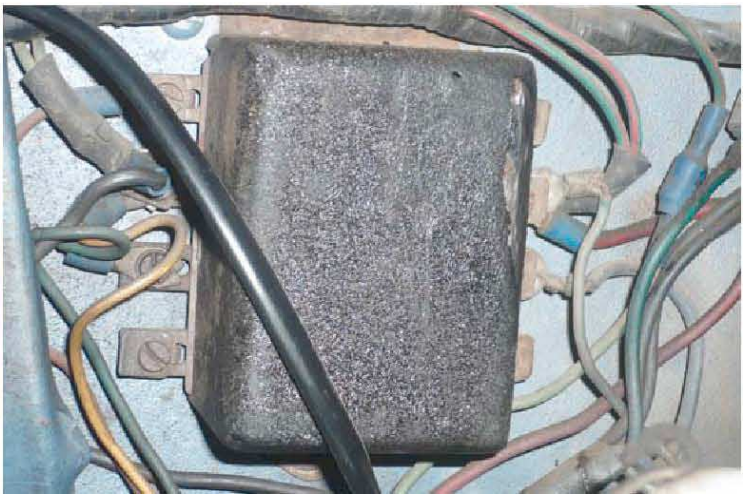

UPDATE

Below is a far simpler way of wiring up the rear flashers, which also leaves the stop lights operating as flashers. There are no alterations to the original wiring just two new wires going from the DB10 relay at the front to the flashers at the rear.

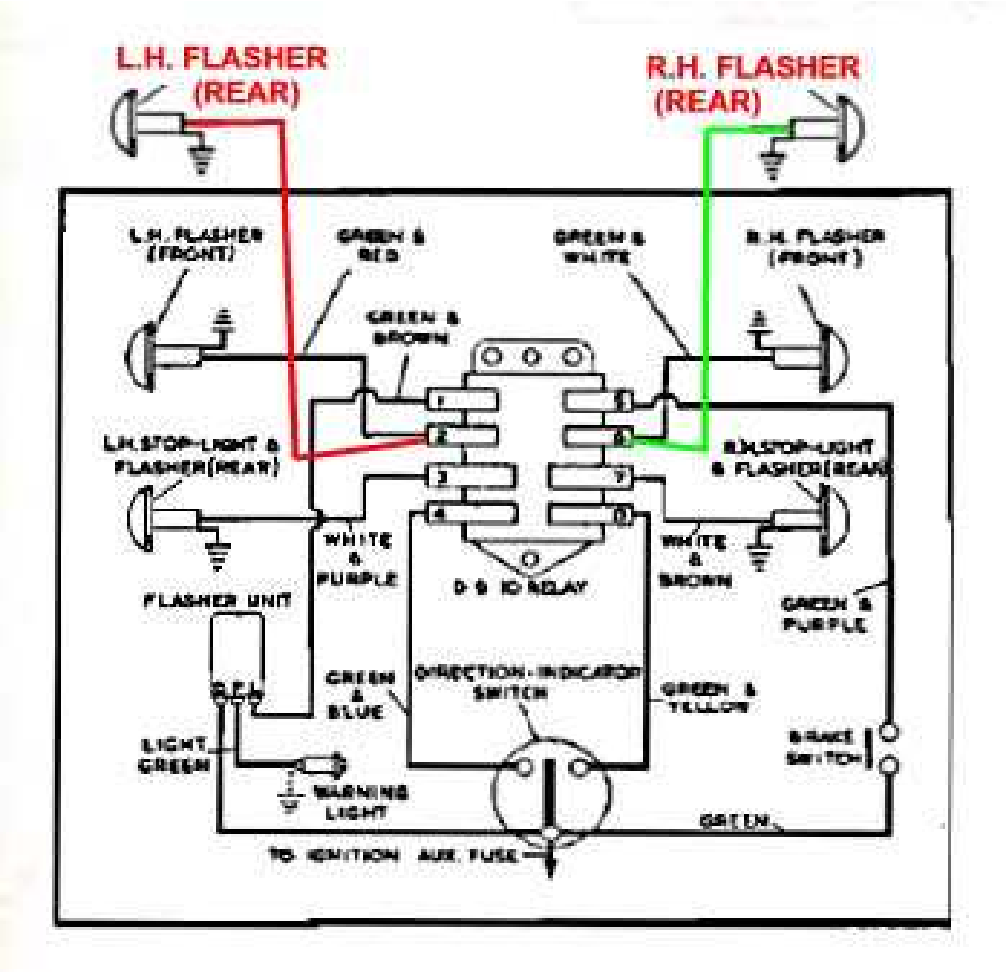

See John Simm's website (www.healey6.com/technical.htm) for conversion of the rear reflectors to flashers on 6 cylinder cars.

Don Hardie 23/07/12

L.E.D. FLASHER LIGHT RELAYS

2 Required - one for each side

I recently bought some 1157 Amber/White LED lights for the front Running/Flasher lights. Most were not bright enough or when the runnings were on the flashing amber was over powered by the white.
I finally found one that was supposed to turn the white off when the amber was flashing and the amber was very bright. When installed both worked ok when used separately, but if the white was on the amber wouldn't flash just stayed on as long as the flasher switch was on.
I got in touch with the supplier and he said he tested the ones he had in stock and said they worked as advertised.
At first I disconnected the red wire just under the fuse box so I could use the bright amber flashers, but I like to use the white running lights when it is dull and not turn on the Head Lights. Also the regulations here say the running lights should work if fitted.

I installed 2 relays, wired them up as shown in the wiring diagram below and reconnected the red wire just under the fuse box. The blue crimp on connectors mate perfectly with the Luces ones.

When the amber is flashing the running lights don't light up as the gap between flashes is so small, but the flashing amber still looks the same as before.

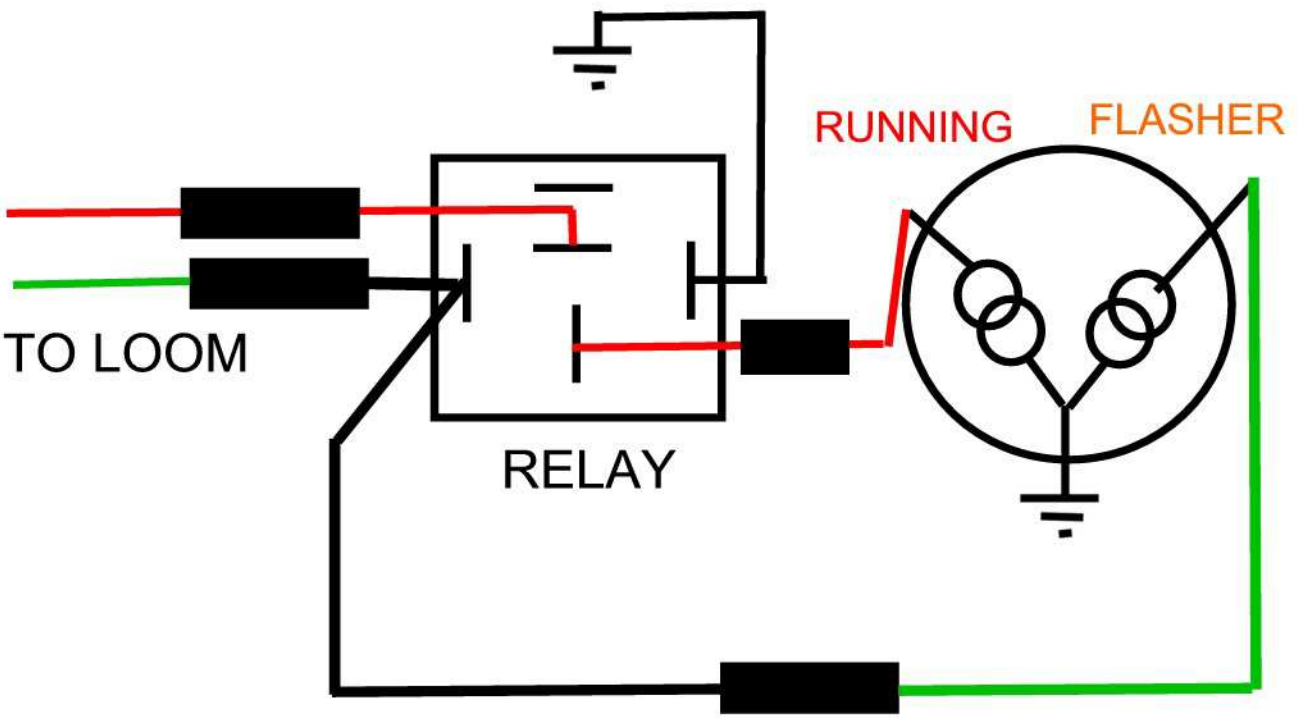

- Denotes connectors.

The right hand relay on the shroud support together with the Fog & Driving, Headlight & Horn relays.

The left hand relay on the inner guard, just near the DB10 Flasher relay.

Don Hardie 31/12/2014 healeynut@hotmail.com

FITTING LED GLOBES

I recently fitted 4 LED globes to my front Park/Blinkers and the rear Park/Stop lights. The globes I used are 1157 EAGLE EYE 5, from http://autolumination.com/1156_1157.htm , not cheap but worthwhile. They don't make one with Amber 5 Watt for blinkers and 4 Super Whites for the Parks, which would be good.

If you are fitting these to both front and rear your existing flasher can may not work as there is only a small draw of current from these globes, so you may have to fit Autolumination's EFL-3 LED FLASHER UNIT which is designed to work with any mix of LED and Incandescent or LED only globes.

http://autolumination.com/equalizers.htm

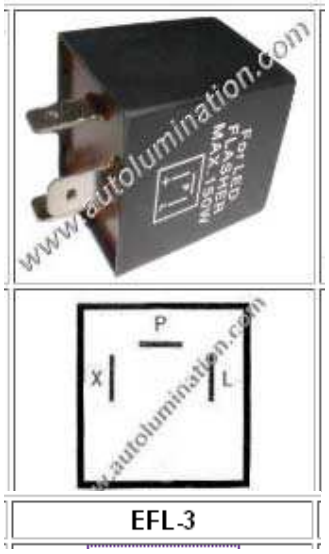

$14.99

The Lucas candles behind the clear lens on the left and the Eagle Eye 5 on the right and that's only the park LEDs!!!!!

While I was at it I fitted LEDs to the Dash lights.

http://autolumination.com/otherleds.htm

For the Speedo, Taco, Oil/Temp and Fuel gauges I used the BLUE E10 Superstar LED Bulbs.

You will have to check which type of base (screw or ba9s) and order accordingly.

For wedge bases - http://autolumination.com/906.htm

Don't forget that the above prices are US$ (at 2010) and shipping will be added.

I have read somewhere, not to use Bright White behind a coloured lens, use Red behind a red lens and Amber behind an amber lens. Something to do with a coloured lens affecting the brightness of a Bright White LED.

I had an after glow on the blinker warning light and fitted a 100 Ohm 5 Watt resistor (from Dick Smiths – 34 cents) across the wires going to the warning light. As there were already push in connectors on the wires I added connectors and insulated piggy back connectors to the resistor (see below).

Autolumination recommend a 10 watt resistor, but as the draw even at the maximum regulated voltage of 14.4 Volts of a Dynamo/Alternator is only 2.07 Watts I used a 5 Watt resistor even though a 10 Watt was available.

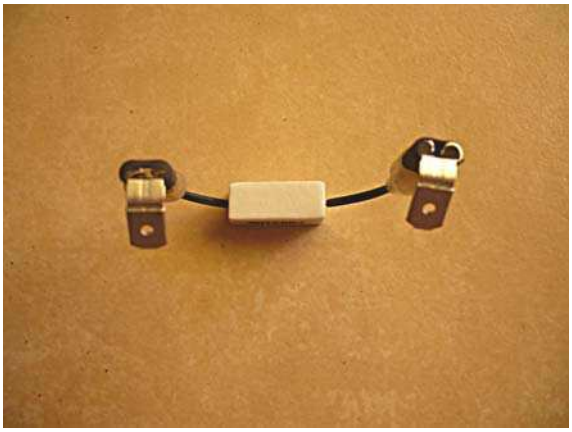

Don Hardie
08/06/11

Don Hardie

UPDATE 07/08/12

A friend recently had trouble fitting an Eagle Eye 5 to a Healey bulb holder, because of the different shape to the original incandescent bulb, he couldn't get the bulb in far enough to turn it to the lock position (I hadn't had this problem with my installation).
The answer was to relieve the holder for both pins, just enough to allow the bulb to turn, as shown below and the contact springs had enough spring to maintain contact with the globe.

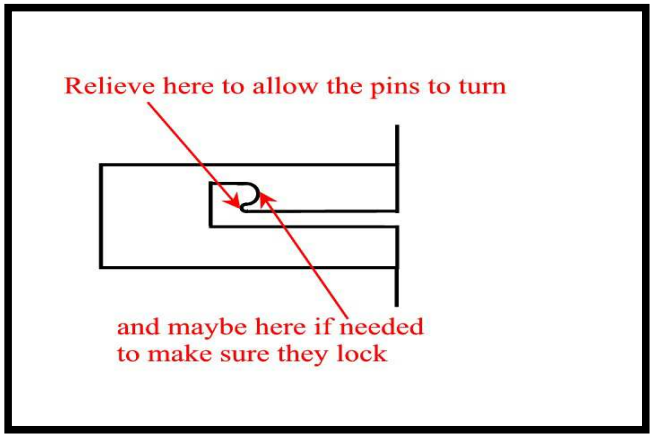

PLEASE NOTE

Autolumination are updating their stock regularly.
The one they recommend at the moment is the MATRIX II below, but it doesn't give the wattage. They are a lot cheaper $7.99 against $19.99 for the Eagle Eye 5 which are still stocked, but in a revised design.

D.H.

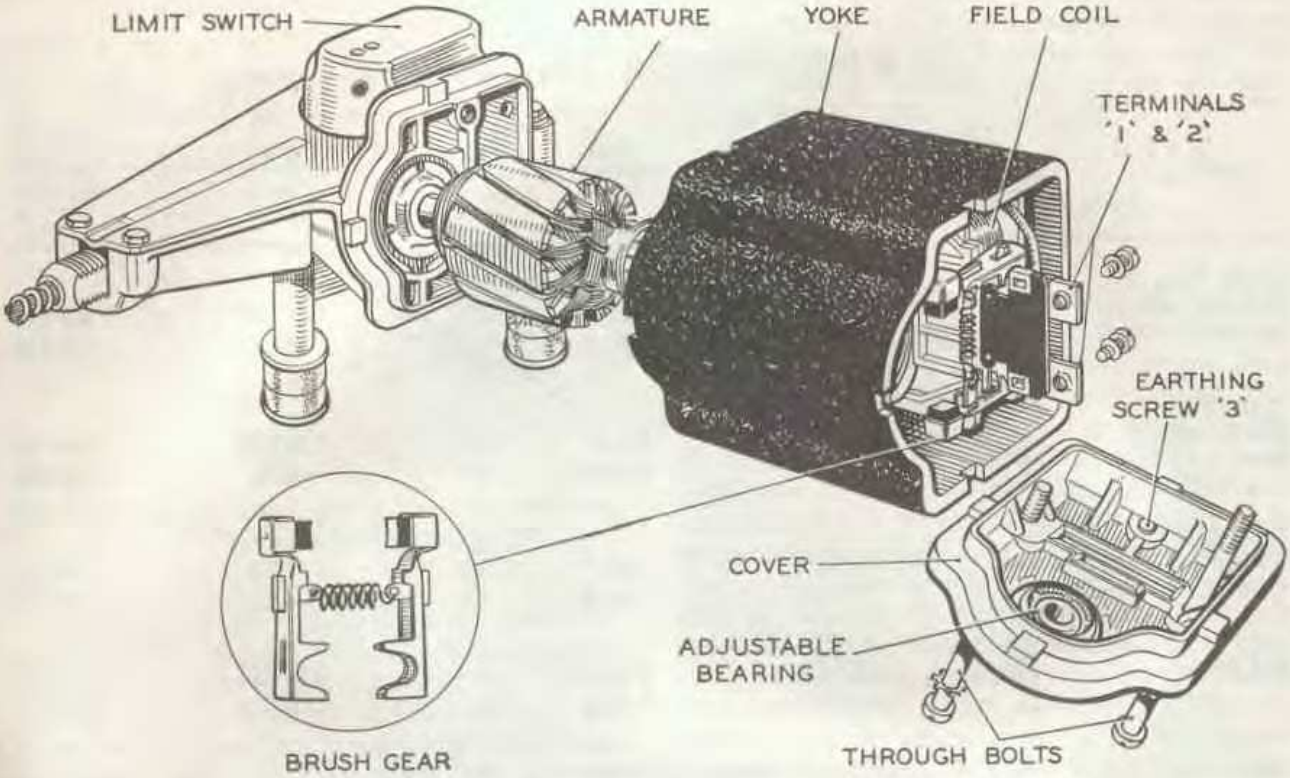

Parts of the Lucas electric windshield wiper.

BRAKE SWITCH OVERRIDE RELAY

An override relay is incorporated in some circuits to prevent simultaneous application of the brake and direction signal lights. When simultaneous application is made, the override relay operates to allow the proper stop light filament to flash and the other to remain steady.

Troubleshooting. In the event troubleshooting is necessary, check the bulb filaments. Turn on the ignition and measure the voltage at the flasher unit terminal B, which should be the same as the battery voltage; otherwise, use the wiring diagram to check the wiring leading to the relay. Connect the flasher unit terminals B and L together and operate the turn indicator switch. If the flasher lamps now light, the flasher unit is defective. If the lamps do not light, test the brake switch override relay as follows:

Troubleshooting the Brake Override Relay. Use a jumper wire to connect terminals 1, 2, and 3 together; the left-hand lamps should now flash. Use the jumper wire to connect relay terminals 1, 6, and 7 together; the right-hand lamps should now flash.

Installing a New Flasher Unit. When replacing a flasher unit, it is advisable to test the circuit to avoid damaging the new flasher unit. Join the cables normally connected to flasher terminals L, B, and P together and operate the direction-indicator switch. In the event there is trouble in the line or an incorrect conection made, the ignition auxiliary fuse will blow out but no damage will result to the flasher unit.

Adjusting the Relay Air Gaps. Each armature controls three pairs of contacts, two pairs being normally open and one pair normally closed. For setting purposes, the three contacts can be identified as follows: Inner pairs, next to the core, normally open; outer lower pairs, normally open; outer upper pairs, normally closed. When an inner pair

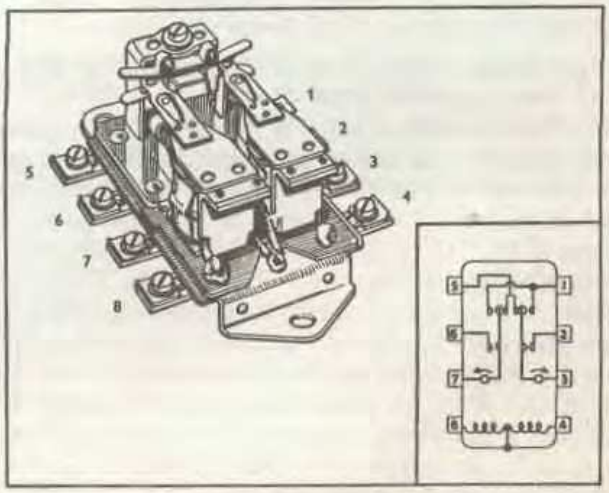

Lucas brake override relay and the wiring diagram.

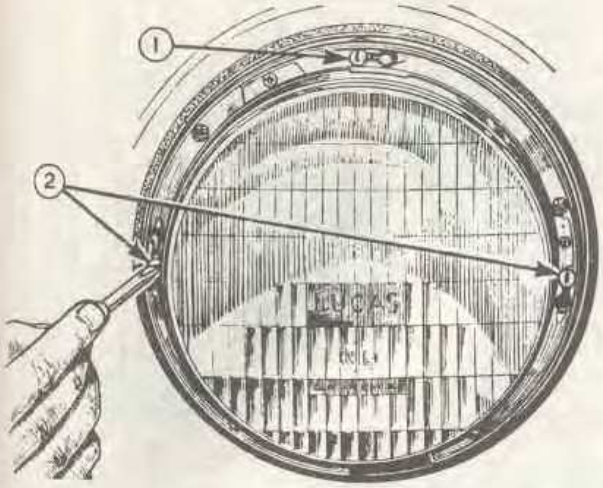

Headlamp aiming screws: (1) vertical adjustment, (2) horizontal adjustment.

of contacts is just touching, the relay should have an armature-to-core gap of 0.010"–0.015" (0.25–0.38 mm.). And when these contacts are separated by 0.007"–0.013" (0.18–0.33 mm.) gap, the outer lower contacts must be separated by 0.012"–0.018" (0.31–0.46 mm.) gap. Adjustments are made by bending the fixed contact carrier as follows: (1) Insert a 0.010" (0.25 mm.) gauge between an armature and its core. (2) Press down on the armature. (3) Adjust the height of the inner contact carrier until the inner pair of contacts is just touching. (4) Remove the gauge. (5) Insert the 0.010" (0.25 mm.) gauge between the inner pair of contacts and lightly press down on the armature. (6) Adjust the outer lower contact carrier until the outer lower contacts are just touching. (7) Remove the gauge. (8) With the outer lower contacts just touching, adjust the upper contact carrier until a 0.015" (0.38 mm.) gauge is a sliding fit between the outer upper contacts. (9) Remove the gauge and install the cover.

LIGHTING CIRCUITS

Lucas, who supplies the electrical equipment for all British manufactured cars, has standardized the

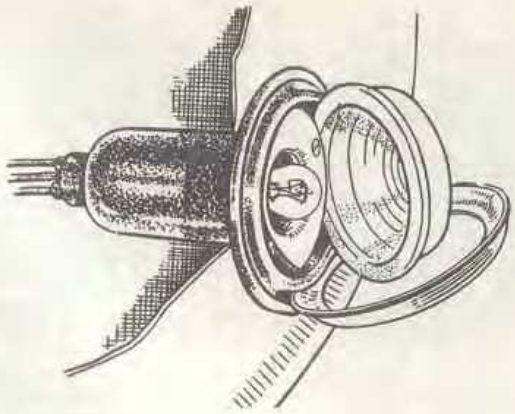

Rubber-secured lens. Peel back the rubber to release the lens.

wiring circuits in regards to cable colors for identification purposes and also uses the same basic circuits for all cars with identical equipment. The illustrated composite circuit chart is composed of all the conventional smaller circuits so that the mechanic need only study the general chart to familiarize himself with any British car's wiring diagram.

Cable Identification

With few exceptions, the electrical system of a motor vehicle can be considered as a series of basic circuits, each consisting of the component, its switch and three wires—feed wire, switch wire, and return. The return circuit is provided by the frame of the vehicle, although in the case of components insulated from the chassis, a ground lead is also necessary. Some variations are to be found, such as fuses, two-way switching, and so on, but the principle of feed wire, switch wire and return remains, and it is upon this principle that the Lucas color scheme is based. Feed wires carry a main color only, switch wires have the main color of the feed with a color tracer, while the return or ground leads are black. Where components are switched or controlled in the ground side, that is, with the switch wire on the return side of the unit instead of on the feed side, this is usually indicated by the use of a black tracer. Main colors, of which

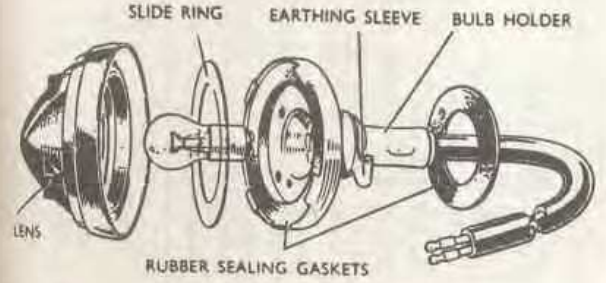

Typical bayonet attached lens. Press inwards and turn counterclockwise to release the lens.

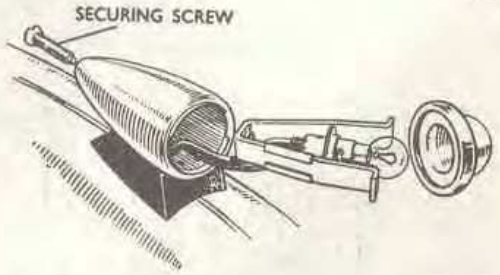

Some lenses are held by a screw from the back of the lamp housing.

JOHN HARPER'S ARTICLES
No 11B
Rear Main Bearing Oil Leaks

Oil leaks from the rear main bearing of the four-cylinder engine are a fairly frequent problem. If this leak is severe then oil can get into the clutch but fortunately this happens rarely and then only when the loose split pin in the bottom the bell housing stops moving around and the drain hole blocks. The design of the sealing arrangement is not that positive and relies on a archimedean reverse screw scroll cut in the crankshaft to move any free oil back into the engine as it rotates. The system normally works without oil loss if: -

l. The felt sealing "rods" in the main bearing caps are correctly fitted.
2.The scroll is clean and the rear-bearing cap is not damaged.
3.There is no restriction in the oil return route back to the sump.
4.The rear main is not so badly worn as to allow excessive oil flow.
5.There is no other leak in the area of the engine backplate.

Taking these points in turn, the two felt seals should be pushed well down into the holes formed between the main bearing cap and the block. They should not be shortened and should be forced in tight as the sump is bolted down. The top half of the rear oil catcher should be removed for cleaning and then fitted after the bearing cap with a new gasket and jointing material applied to the bottom face where it joins with the rear cap.

There is a possibility that if a rear main fails and the bearing material runs that the part of the crankshaft where the scroll is machined will touch the outer edge of the bearing cap. This should be checked before carrying out an engine rebuild because if the wear is serious there is not a lot that can be done. In this state there would have been very heavy rumbling from the mains but a previous owner could have ignored this. In normal circumstances however a careful clean by hand should be sufficient.

The cup on the back of the rear bearing cap feeds into a drain pipe. This must be cleaned carefully particularly if the engine had last been run before the days of detergent oils.

If an engine has done a high mileage then a crank regrind may be necessary to cure excessive bearing clearance which allows more oil to flow than the drain pipe and scroll can cope with.

Persistent leaks were often encountered from the area of the rear main to backplate joint, particularly on earlier engines. A variety of modifications were applied which included a step in the bottom rear edge of the bearing cap into which was fitted a square section length of cork. This only solved some of the problems. Later extra studs were added feeding through the backplate into new holes drilled and tapped into the rear bearing cap. This was effective in most cases as it clamped the gasket far more positively and stopped most of the leaks. It is possible with care to apply this modification to earlier engines but a later type backplate should be used if possible.

JOHN HARPER'S ARTICLES
No 11B

Copper washers were found to be necessary under the heads of these additional studs. It was found after the 100 production had ceased that oil could follow the stud thread. The copper washers sealed off this flow. I would advise fitting these washers to all later engines, as they were standard on later 2.2 litre petrol engines.

Before the production of the four-cylinder family of engines finally ceased in the early seventies a major change was made to incorporate a conventional oil seal behind the rear main bearing. Presumably the scroll type of "seal" continued to give trouble even after the above modifications were implemented. However my own experience and that of others who have had similar problems is that if attention is applied to the points above then most oil leaks can be cured.

DISCLAIMER: Whilst every effort is made to check the information incorporated in this series, no responsibility can be accepted for errors. However, corrections, improvements, suggestions & additional information will be very welcome (in writing please).

 To contact the author please write to him at: 7 Cedar Avenue, Ickleford, Hitchin, Herts. SG5 3XU. or Telephone 0462-51970.

Control Head (Trafficator) Rebuild for an Adjustable Wheel
July, 2005

Well, I have been putting off the task of rebuilding the control head to prepare it for installation in my Moto-Lita wood rim steering wheel. I rebuilt the original control head when I was in college and I don't recall it being a fun task. Although, back then I did so without any instruction. Today I have the benefit of helpful tips from Norman Nock, Michael Salter, Steve Byers, John Trifari and Tracy Drummond and others. The notes below and some of the images are "borrowed" from their work. Tracy's photos were particularly helpful. They may be found at:
http://www.wavewired.net/~tracy/trafficator/trafficator.htm or at
http://www.justbrits.com/articles.htm

For starters I now know that the way to begin is not to pry up the bent tabs at the back of the unit! Instead, the process is much simpler but less obvious. Turns out the whole job was not as bad as I had remembered.

In my case I needed to completely rebuild my control head because the signal lever was broken and because I needed to install new wiring. I also wanted to improve the finish of the Bakelite head which had turned a bit brown with age. If one only needed to replace the wiring the suggestions from Michael Salter proved to be very helpful. That was my first step.

Read through these instructions completely before starting the disassembly!! If you don't want to try this then I understand that Vic Wright (cv@spiritone.com) does a great job of rebuilding used units!

On the steering wheel, you will see three set screws on the steering wheel hub, forward of the spokes. Loosen (probably remove, to avoid losing them) the screws. The four wires that go to the control head need to be disconnected from the harness at the front of the car not far from where they exit the long stator tube at the steering box. The job is made easier if one simply cuts the bullet connectors off the wiring and then solders a wire or ties fishing line to the wire. Having the line attached to the wiring will make inserting the new wiring much easier than it would otherwise be. The line should just rest in the steering column until the replacement is ready to install. The control head with a short stator tube and the wiring can then be removed from the steering column by pulling straight out (not twisting). Neil Trelenberg suggests **http://www.healeys.ca/s_10.asp** drawing a line on the stator (short and long) tube with a felt marker as a guide for realigning later.

Now to the disassembly of the control head unit:
First, carefully pry the horn button trim ring away from the bakelite head being careful not to scratch it.

Once the horn button is loosened, the horn spring will be revealed. Its small diameter end faces to the bakelite head. The laminated blades of the horn switch secured by two brass screws also become evident.

Examine the entire assembly. On the back of the unit, viewed from the side, a small tab bent down into a slot can be observed.

The tab can be pushed up so that it slides on the flat plate and the unit can be rotated slowly. Doing so provides access through 3 holes in the base mount plate to 3 slotted screws.

Before removing the three screws, make a note or reference mark of how the two halves of the unit secured by the three screws goes together. Then remove the screws. The correct orientation of the turn signal lever is straight up, but if the two halves are oriented incorrectly, the turn signal lever will be either pointed down, or off to the side.

The stator tube, base plate, locating plate, the base mount plate and assorted washers and spring can then be separated from the bakelite mounting plate and head. This assembled unit does not need to be disassembled. It can be pulled off the wires and set aside for assembly later.

Examine the back of the mounting plate. There are six nuts visible. Three are for the turn signal switch, two are for the horn (one goes through the brass gound ring) and the one without an attached wire is to hold the head and the mounting plate together (It is barely visible in the photo under the wiring sheath). Make a drawing to illustrate the color code and where each of the wires should reconnect to its proper fitting.

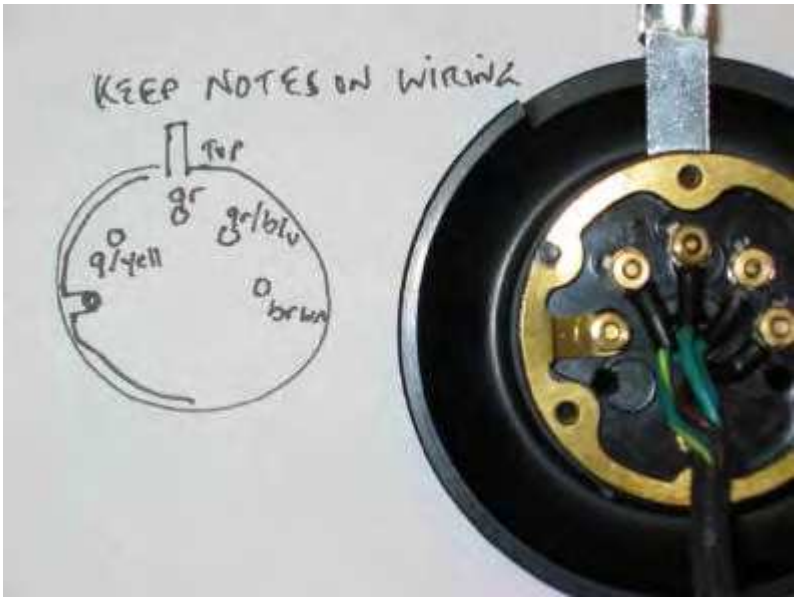

If your plan is to **install a new wiring harness only** and you do not wish to disassemble the control head to access the turn signal switch it is **IMPORTANT** to install the new wires onto the screws one wire at a time.
A. The screw on the right in the photo is accessed under the horn button. Hold it with a screw driver and loosen the nut holding the wire, remove the nut, change the wire, refit and tighten the nut.

B. The nut second from the right is held in place by a hex head screw recessed in the bakelite mounting plate. The turn signal lever must be moved so that it is aligned behind the screw/nut. It will hold the screw in place permitting removal of the nut and old wire, change the wire and refit and tighten the nut. **Do not let the turn signal lever slip while doing this procedure or you will likely be disassembling the complete unit!**

C. Reposition the turn signal lever to the center position and repeat B. above for the screw/nut located third from the right.

D. Move the turn signal lever behind the screw/nut located fourth from the right and repeat B. above.
If all you are doing is replacing the wiring you are finished. Leave the screw/nut to the far left, through the horn ground ring, alone.

Feed the wire through the base plate and the stator tube. Reinstall the three base plate screws with the trigger opposite the turn signal lever. I found it easiest to install the screws with the unit on its side. Don't forget to then reposition the thin plate with the locating tab to the slot and push it down. Reinstall the horn button, spring and chrome trim ring. Note that the button and ring have a locating notch that matches up with the bakelite head.

I recommend cutting the bullet connectors off the wires, solder the wire or tie the fishing line left in the steering column, to the new wires and slowly pull the new wiring harness through the stator tube and out the end of the steering box. The fit of the harness in the tube is tight so it might be best to tape the wire ends together as they are pulled through. The short stator tube fits down and into the longer stator tube in the column. The tubes go together in only one orientation, directed by the dimples found on the side of the short tube.

If you are installing the control head into a non-stock wooden steering wheel you may need to install a shim (I used the plastic top of a yogurt container) inside the hub between the hub and the control head to move the control head toward the driver slightly so that the turn signal lever does not contact the wheel ring. Then reinstall the three set screws to tighten the control head to the wheel hub.

Cleaning or repairing the turn signal mechanism.

Remove the two screws holding the laminated blades of the horn switch under the horn button. The horn switch will lift out. The third screw can then be removed and the bakelite head can then be separated from the mounting plate.

The turn signal lever is attached with one screw to the back of the bakelite mounting plate. Underneath it is a curved wire with a spring on each side of the lever.

There is another little spring and ball at the bottom of the turn signal lever.

If you carefully remove the single screw to separate the lever from the assembly, the springs and small parts should stay in place. Note how they should be reassembled, then take apart, clean and lubricate with a little lithium grease.

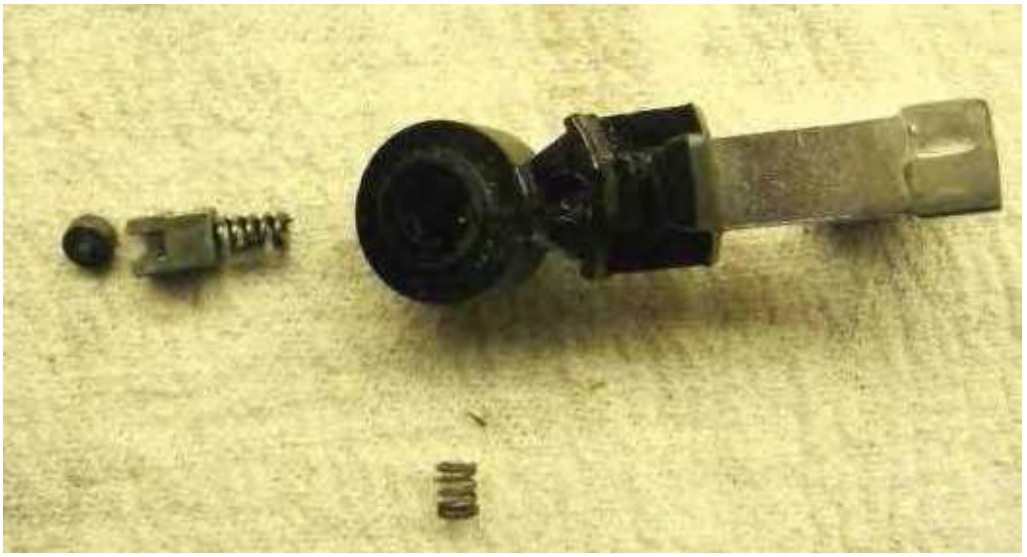

If you experience an explosion of parts, don’t be alarmed. It will all go back together! All components are identified in the photo below:

The proper positioning of the two hinges or "triggers" is important. They have angles on the end that fit opposite each other. They need to be placed as seen in the image and drawing for the canceling switch to work. Before reassembly of the complete unit, now is a good time to refinish the bakelite if it is needed.

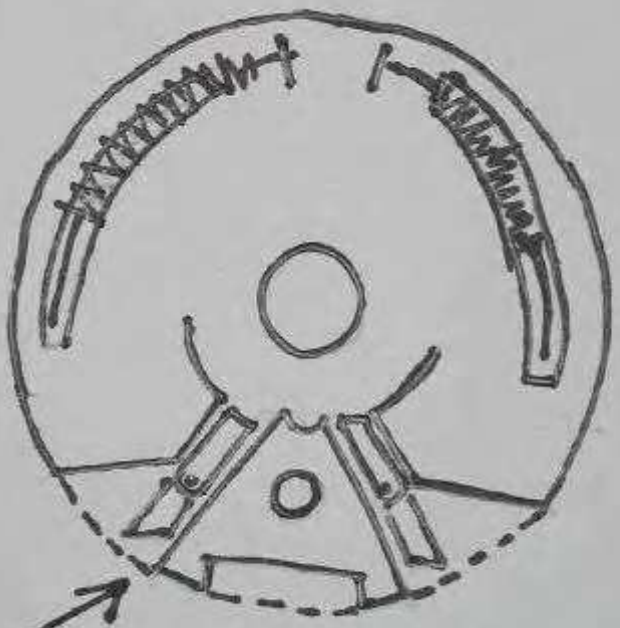

NOTE ANGLE OF
"TRIGGERS"

Refinishing the Bakelite Head

I have lost the source of these instructions or I would give attribution, but clean the head well and wipe with a liquid cleaner like the type used before spray painting metal. Then apply black India ink. I used two coats letting the first coat dry for about an hour before applying the second. Then use black paste shoe polish rubbed in well. Polish. Reapply paste and polish again. Finally, apply a coat of carnuba wax for protection and final shine. Be very careful to not drop the bakelite head! I recommend doing all the polishing over a carpeted floor in case the head is dropped. This should result in a control head that looks brand new.

Assembly
Carefully place the head and the mounting plate together pushing the spring at the end of the turn signal lever into the mounting plate. Holding the two pieces together install and tighten the single screw and nut at the bottom of the unit. This screw/nut will securely hold the two pieces together while the horn switch screws and nuts are inserted and tightened.

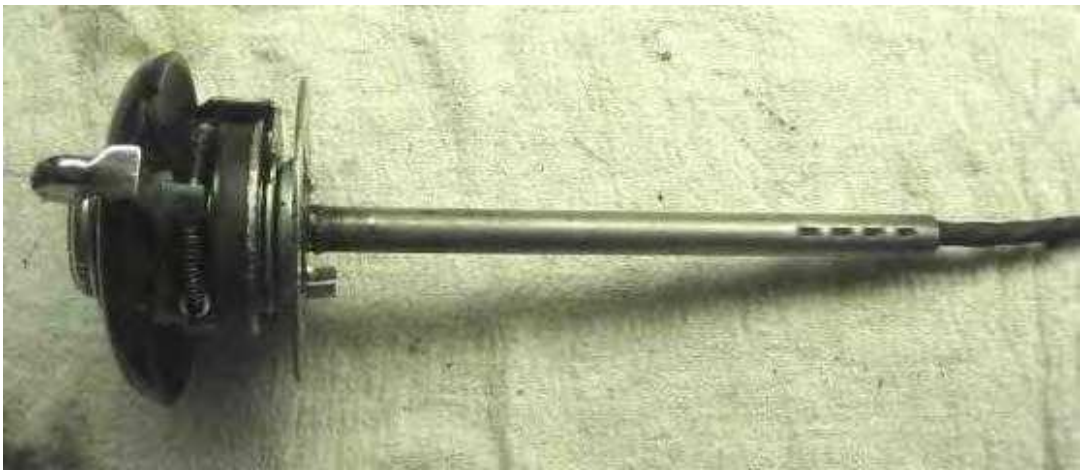

I recommend, based on the comments of others and my own experience, cutting the bullet connectors off the wires, solder the wire or tie the fishing line left in the steering column, to the new wires and slowly pull the new wiring harness through the stator tube and out the end of the steering box. The fit of the harness in the tube is tight so it might be best to tape the wire ends together as they are pulled through.

Steve Byers took a slightly different approach that certainly makes taking the wiring through the stator tube easier. He commented, "*although I have been able to pull the harness out of the column with the connectors installed, I have never been able to put it back in no matter how tightly I taped/wrapped the connectors together. The last time I did this, I installed a new steering column harness as a part of a general re-wiring. To make it easy on myself, I cut off all the bullets from the new harness (leaving about 3/4" of the wire attached to each), fed the harness through, and then soldered the bullets back on with a piece of heat-shrink tubing over the splice. The key is, I did not twist the wires together before soldering but soldered them together as they lay side by side. That way, next time the harness needs removing it will be easy to remove the bullets without damaging the wire, and that can be done many times without damage to the wires.*"

The short stator tube fits down and into the longer stator tube in the column. The tubes go together in only one orientation, directed by the dimples found on the side of the short tube.

If you are installing the control head into a non-stock wooden steering wheel (Moto Lita, Derrington) you may need to install a shim (I used the plastic top of a yogurt container) inside the hub between the hub and the control head to move the control head toward the driver slightly so that the turn signal lever does not contact the wheel ring. Then reinstall the three set screws to tighten the control head to the wheel hub. The job is complete! Now the control head (horn and turn signal control switch) will look and work as well as the rest of your car.

Happy Healeying and Cheers!
Lin Rose ©
1960 BT7
1959 Bugeye
July 7, 2005

Revised July 8, 2005

Photos of trafficator.

Here are the pics. I hope this helps out some of you who aspire to be watchmakers and will use your trafficator to get your apprenticeship. Mine was suffering from the failure to cancel in one direction.

Keep in mind that there are a dozen or so spring loaded little bits inside just waiting to be liberated. There is a great how-to by Steve Byers that should be referenced. Read this and cross check against the photos I uploaded. http://hometown.aol.com/bgahc/01_jwha_trafficatorremoval.html

Note that I never remove all the screws for the electrical connection throughout my inspection. DO NOT REMOVE THE SCREWS UNDER THE HORN ! PUSH BUTTON FIRST!! Here's the photos link:

http://www.wavewired.net/~tracy/trafficator/trafficator.htm

Tracy

Here they are


Keep notes!
gr
gr/blu
gr/wh
brn
ground
ring

Refinishing your Trafficator Head

Bakelite is a cross-linked polymer of phenol and formaldehyde. When it cures, there are no polymer chain ends to absorb the dye in shoe polish.

Thus, when you apply and polish with black shoe polish, you are seeing only the polishing effect of the wax in the shoe polish.

If you are going to use wax, beeswax will provide a fairly durable shine. You can also realize success with silicone waxes as they adhere to the bakelite somewhat better. The other choice is to prepare the bakelite surface and paint with epoxy paint. Do not try to roughen the surface, just remove any wax or oil before painting. If you wear through the thin top surface, you will be into the filler of the part, which is often wood dust or even asbestos dust.

Good luck with your project!

Copied fromWings March 2009, magazine of Austin Healey Owners of British Columbia USA

TECHNICAL REPORT

REAR HUB SPLINES

In my report of May, 20011 covered items to watch out for regarding wheels and splines. One of these items dealt with the rear spline. This is a flanged piece which bolts onto the rear wheel studs with tapered nuts, much the same as a conventional wheel on a modem car. Now you would think that these nuts wouldn't work loose, would you, any more than they would on a modem car. But occasionally they do, as one of our club members recently found to his misfortune, losing his complete wheel and hub assembly. So be sure to remove your rear wheel occasionally and check that these nuts are tight, and as mentioned in my previous report, if you want to be sure, remove the nuts, and re-fit them with some blue loctite.

I still occasionally come across a car with wheels that are loose on the spline due to the knock-on not being knocked on hard enough. Remember you must use a fairly heavy hammer for this job, the rule of thumb being "tight, but not ridiculous".

The original hammer supplied with the car was ideal for this job, having a copper face on one side and hide on the other. However the copper face does get work-hardened, and can damage the knock-on. Non-original lead hammers can now be obtained, which are just as effective without damaging the knock-on.

Also remember, while your wheel is off, rub a smear of grease on the tapered faces, the thread, and on the splines themselves. This will reduce wear and will help the knock-on to pull up snugly and hold your wheel in place.

Happy Healeying
John Dowsett

N.S.W. AUSTRALIA
Austin-Healey
OWNERS CLUB
FLAT CHAT

July 2002.

REPLACING STUDS IN A 4 STUD REAR HUB

It is not uncommon for the studs on a BN1 Austin rear hub to strip and /or shear. This has happened to me twice, first in 2012 and then again in 2017.

The first time Insurance repaired the mudguard and brake linings, replaced the 4 stud hub, muffler, tail pipe, brake backing plate and Alfin brake drum.

The second time the wheel didn't come off completly and we were able to get the 100 onto a tow truck and delivered home. I then did the repair myself.

The studs were replaced with bolts, I used BJ8 rear hub bolts, 7/16" unf wheel nuts and locknuts both fitted with Permanant Locktite thread locker

If the studs are still in the hub, drill the back of the stud (7/16") to free the factory swaging, (an attempt to stop them undoing) and then unscrew them.

Drill the threaded holes out to 11.6mm, press the bolts in from the rear and press the steel sleeves onto the studs.

All you have to do now is reassemble and you won't have a wheel come off as I did.

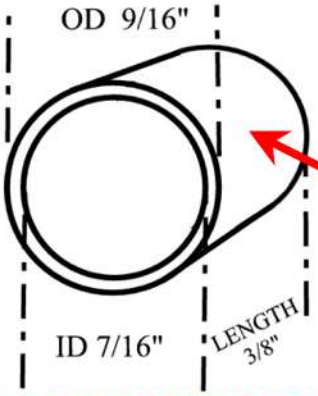

4 off STEEL SLEEVES FOR EACH HUB, PRESSED ONTO HUB BOLTS TO LOCATE AXLE & BRAKE DRUM

STUDS REPLACED WITH BJ8 7/16" HUB BOLTS PRESSED IN FROM THE REAR

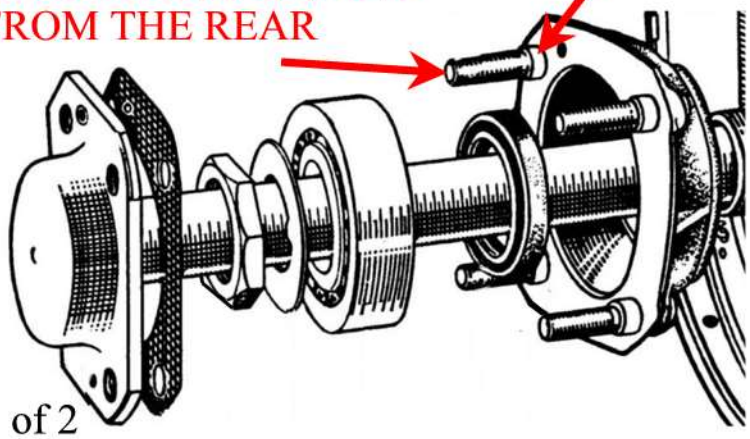

DON HARDIE
healeynut@hotmail.com

2017

BJ8 REAR
HUB BOLT

AUSTIN BROKEN
& STRIPPED STUDS

Austin-Healey 100 BN1 Rear Axle and Four-stud Hub Mounting.

I assume everybody has heard by now of the catastrophic failure that my 100 endured on the way to Adelaide for the 2011 40th National Rally. If not, here is a brief description:
Near Waikerie, about 200km from our destination the LH rear wheel came off, complete with the hub extension, when all four studs suddenly failed. The car dropped onto the brake drum, and my first reaction was to apply the brake. Without the wheel & hub extension, the drum came off and with it the brake shoes and the internals of the wheel cylinder and brake fluid.
So without brakes, we skidded along on the back-plate. When that wore away, the exhaust hit the road. The noise was terrible! Remarkably, I was able to steer and when we eventually slowed down, I was able to get the car safely off the road. I got out expecting to see a lot of damage to the bodywork, from both the departure of the wheel and the subsequent scraping along the road. I was amazed to see that a ruined brake back-plate and badly damaged exhaust were the limit of the damage. Helen, like me was shaken but thankful that we had not been injured by such a catastrophe. The support that we got from RACQ Ultracare was marvelous, and they arranged for the car to be towed to (South Australian club member) John Veale's home in Brighton.
We arrived at John's home by mid-morning. By midnight I was able to drive "PAN" to the Chifley on South Terrace and enjoy the National Rally. I can't thank John, John Read, John Hindson and Lyndon Rogers enough for their generosity and clubmanship in helping us out. Thanks to John Veale's mechanical ability and facilities, John Hindson's supply of parts and John Read's assistance, Helen & I were able to enjoy the Rally, when the previous day, all seemed lost as we waited forlornly by the side of the road for the tow truck.

Why did the studs fail? This failure used to be a common problem with the early BN1s because in the old days, when proper maintenance wasn't always done, the tension of the wheel nuts that hold the hub extension on may not have been checked regularly. They were often allowed to become loose. But since the clubs have been in existence, maintenance has improved, and it is rare to hear of such a failure. I have a check-list of things to do before taking on a long road trip & checking these wheel nuts is high on that list.
I can only presume that metal fatigue was the culprit. While I am proud of the fact that my Healey has never been de-registered in its whole life, the downside of that is that the car has probably done a lot more miles than most Austin-Healeys.
Since returning home from Adelaide I have obtained from Bruce Dixon in Melbourne, a pair of modified hubs. These hubs (the part that carries the wheel bearing, not the wire wheel) have been fitted with the same type of studs that are used on the later model Healeys. These splined studs have a mushroom head and are pressed into the hub from the inside, unlike the original studs which screw into the hub from the wheel side, and are then swaged over to lock them in place. With the new studs any load is taken in compression instead of in tension. It is simply a better design and I recommend that owners of BN1s that have the early type spiral bevel axle consider such a modification.

If you are interested, please contact me and I can arrange an exchange.

Alwyn Keepence
Queensland AHOC

TUBE SHOCK TOWERS FOR AUSTIN HEALEY

— MOUNTS BEHIND REAREND

REAR SHOCKS

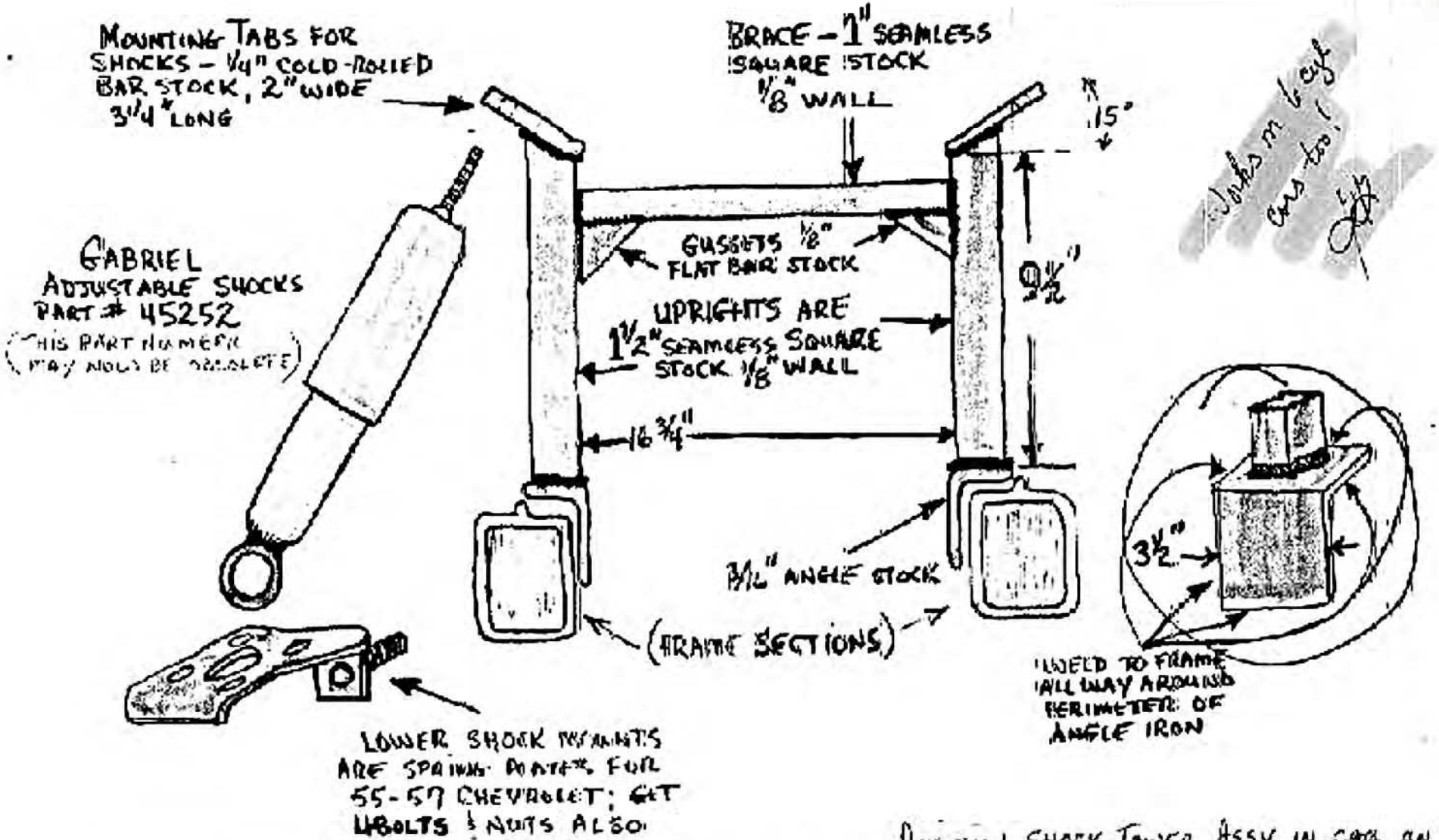

INSTALLATION NOTE — POSITION SHOCK TOWER ASSY. IN CAR ON TOP OF UNWELDED ANGLE IRON FOR FIT; GAS WELD ANGLE IRON TO FRAME SECTIONS THEN ARC WELD TOWER ASSY. TO ANGLE IRON

LOWERING BLOCKS

Lowering blocks were fitted as the car was sitting too high when the rear springs were reset on 25/05/2007.

I used two ½ inch blocks so I had room to move if the springs settled.

So far to date 31/01/2017, they haven't settled.

Don Hardie

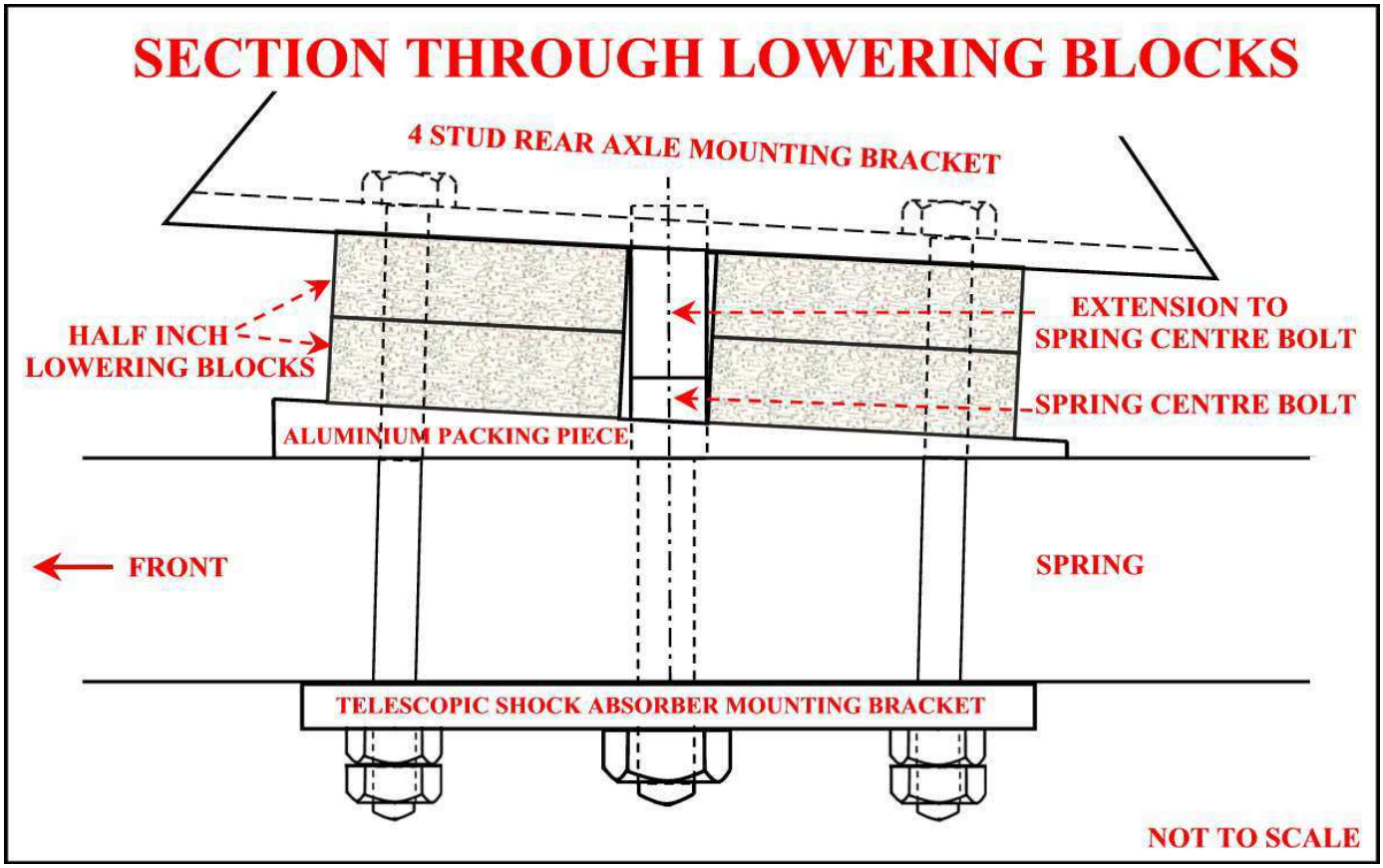

REAL HEALEY NATTER

SEPTEMBER 1996

REAR SPRING SPACERS

Barry Campbell passed on some technical articles on 100's. One interesting one was on Spiral Bevel Rear axle (Four stud ones that is) location and a vibration that can happen when the wedge shaped spacers between the rear springs and the rear axle casing are either left out or fitted the wrong way round.

As I have a vibration at speed when the throttle is held at the point between drive and overrun, my tail was unceremoniously hoisted up and the said spacers checked. They were both in place and the correct way round, that is with the thicker end facing the front of the car. Can anyone hazard a guess as to the cause of the said vibration. The universals and the tailshaft splines are ok. The engine and gearbox mounts have recently been replaced as some were 'US' but the vibration still persists.

DMH-000
(THE HARDIE'S 100-4)

P.S. These articles and others collected over the last few years will be bound (loose leaf to allow for updating) and placed in our Library as 100 TECHNICAL.

UDATE
TAIL SHAFT VIBRATION

Eventually the cause of the above vibration was found. The flange on the diff was just a fraction loose, but as the nut was on with Loctite there was no chance of it coming off. It was quite a job getting the nut of and cleaning the thread.

A useful tool was a piece of 50 x 6 x 300 steel with two 3/8" holes to line up to two on the flange. When bolted to the flange it rests on underside of the chassis to resist the loosening or tightening of the nut.

When the nut was done up the first time there was too much pre-load on the pinion bearings, so a shim washer (5 thou thick) was put in front of the bearing spacer, by chance this gave the correct pre-load. The thread was then coated with Loctite and done up to the correct torque – voila – no vibration.

After the trouble getting the nut off the first time there was no worry about using Loctite to hold it again.

062 (now my Club Rego Number)

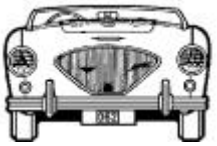

26/11/01

TECHNICAL REPORT

REAR SUSPENSION

The rear suspension is a part of your car that probably does not receive the attention it should. This should be checked over at every service. Run the rear of the car up on ramps (if available) or jack the rear up and put axle stands under the lower U-bolt plate and lower the jack so the car sits on the stands.

Begin at the front of the spring and check the front shackle bush and pin. The shackle pin nut should be tight so as to clamp the inner ferrule of the metalastik bush, in the spring eye, tight in the chassis mount. Movement of the spring should be taken in the rubber section of the bush only. Check the spring leaves for broken leaves, and the leaf clamps as you move to the centre of the spring to check the U-bolts, seating pads and plates. The Ubolts should have self-locking nuts, which should be tight. Continue to the rear of the spring and check the rear shackle bushes. The bushes at the rear of 4's and 6's up to May 1964 (approx.), are a metalastik type bush, same as front bush, in the spring eye and a sintered bronze bush, with grease nipple to be greased, located in the chassis mount. After May 1964 (approx.), the rear bushes are all rubber. Once again the shackle pin nuts should be tight so that the movement is taken in the rubber part of the bush and not between the bushes and the shackle pins. All shackle pins should be located through the centre of their respective bushes. The rubber bushes are not lubricated although it is a good idea to grease the shackle pins on fitting to make removal when required, easier. Note that cars pre-May 1964 (approx.), may not have rubber pads above and below the U-bolt plates as they had fibre seating pads as original equipment.

This inspection should be done with the springs loaded so that irregularities will show up. The load camber of the springs in the early cars should be 1/2 inch +/- 1/8 inch, and in the late cars 1 inch.

Cars prior to MKIII No. 26706 are early cars for the purposes of the above inspection.

Ian Howard.

N.S.W. AUSTRALIA Austin-Healey OWNERS CLUB FLAT CHAT

April 2000

JOHN HARPER'S ARTICLES
No 12B
Reflectors

One would have thought that there would be little to say about such a straight forward subject but this as you see has not turned out to be the case.

A problem that arose for early owners was that a new lighting regulation came into force on the 1 st October 1954. Fortunately the only problem with the 100 lighting was that no reflectors were fitted as standard. The solution in production, as we all know, was to attach to the rear shroud, pods fitted with 1 1/2" diameter reflectors. I have not been able to find any hard evidence of exactly when this change took place. It has been suggested that this happened during the August 1954 summer holiday production shut down. This seems to be a reasonable assumption but it cannot be confirmed as there appears to be many examples of original cars with pods fitted prior to this date and some cars without pods later than this date. It is only a theory but as the fixing holes and possibly the pods themselves were fitted to the bodies at Jensen's and as we know from our records that bodies were not allocated chassis numbers in strict body number order this could well account for the discrepancies. Further research of where pods were fitted against body number might confirm this theory.

The above regulation relates to vehicles first registered in the UK on or after 1st October 1954. Straightaway you will see that if some cars were manufactured without pods as late as August and were not quickly registered then the garages would have to fit reflectors themselves.
Incidentally the regulation that applies is as follows.

One reflector fixed on each side of the longitudinal axis with no part or the reflector area more than 16" from the outer edge of the vehicle, nor less than 21" apart. The two reflectors must be mounted at the same height of not less than 15" nor more than 42" from the ground. No part of the vehicle must project more than 30" to the rear of the reflector.

Every reflector shall be of such size and so fitted to the vehicle that the orthogonally projected area on a vertical plane at right angles to the longitudinal axis of the vehicle is not less than 1 1/2" diameter and shall be of such shape that a circle of 1 " diameter may be inscribed therein. Reflectors shall not reflect any letter, number or any other marking. The reflector must be kept clean and must be plainly visible from the rear.

Owners of earlier cars, that is those registered before 1 st October 1954 and not already fitted with pods had to fit reflectors themselves as the new lighting regulation was applicable retrospectively. Around this time a large number of smaller manufacturers started making reflectors as well as the major suppliers such as LUCAS so there wasn't a supply problem.

JOHN HARPER'S ARTICLES
No 12B

The difficulty was how to fit them. Some owners or garages were able to order the original pods through their spare parts counter but this took time and most did not wish to wait or thought, as many owners do today, that pods spoil the smooth lines of the 1 00. If pods were not used the next most favoured fixing position appears to be directly onto the rear bumper, outboard of the over-riders. This is a neat solution but has the disadvantage that the bumper has to be drilled and being made a hard metal this is difficult.

Worse though is that the chromium plating will have been lost on the edges of the hole and will soon rust and peel badly. If this is your preferred fixing position then it would be best to have oversize holes drilled before the blade was plated and then fix the reflectors with nuts and bolts rather than self tap screws. The third alternative which appears to be popular is a bracket similar to that used on a 3000 and fitted under the bumper bracket bolts. The reflectors can be legally fitted below the height of the bumper if your car rides reasonably "high". However if yours is somewhat low then watch out for the 15" minimum regulation.

Finally to the reflector units themselves. When introduced onto the 1 00 production line these were LUCAS type RER5 part number 57052 or 57084 (BMC 1 1 G 9021). Unfortunately these, whilst being authentic were somewhat impractical as the lens and rim were held in place by small returns in the rubber base moulding. This was not very secure even when the rubber was new and as soon as it aged the lens and rim was easily knocked or shaken out. The much more practical official supersession, type RER25 part number 57124 (BMC BCA 4537) is now used and accepted by most owners. This later type has a large external rim which fits over the outside of the larger rubber base moulding and firmly retains the lens in position. The RER25 was not introduced until after 1958 and cannot therefore be considered truly original.

 To contact the author please write to him at: 7 Cedar Avenue, Ickleford, Hitchin, Herts. SG5 3XU. or Telephone 0462-51970.

REAL HEALEY NATTER

RESERVE FUEL PUMP

JULY 1997

SU petrol pumps work so well that they are forgotten until they decide not to work. Being hidden under the rear bodywork the old "hit it with a hammer trick" is almost impossible to do. Even if a spare pump is carried, changing it on the side of the road is not easy. The smart thing to do is mount a spare pump near the existing one and connect it to the inlet and outlet pipes with rubber hose and T pieces. A change over switch mounted through the rear bulkhead low down next to the tail shaft tunnel will make the change over easy.

If the change over switch is of the three-position centre off type you can use it as an added theft prevention device.

Rovers have been the tin top transport in our household long before I came on the scene, so a petrol reserve system was a mandatory addition when my petrol tank was remade. A second outlet was added beside the original but it stopped 1" from the bottom of the tank (not the bottom of well) and connected through the front of the boot to the new pump. The new pump became the main and the original the reserve.

Switch over to the spare/reserve pump for about a minute every month to keep the points clean so it will work if you need it, also if you use the reserve make sure to switch back to the main pump when you refill the tank.

DMH-000
(The Hardie's 100)

P.S. Burke's Backyard's theme song is about a house among the gum trees, the rumour around here is that I will soon have a a big garage among the gum trees on the Central Coast.

FACET ELECTRIC FUEL PUMP

The Facet Posi-Flo Electronic Fuel Pump (FEP 06SV) bolts directly in place of the SU one, it comes with an inlet fuel filter and an outlet fitting for 5/16” rubber fuel pipe. As the BN1/2 has ¼” fuel pipes you will need a new outlet fitting (1/8” gas thread to ¼” barb) and a new inlet one (1/8” gas thread to right angle ¼” barb) as the supplied filter would hang down too far.

Cut the steel pipe from the tank about 3” from the back bulkhead and the one going forward so you can use ¼” rubber fuel line and worm drive hose clips to connect to the pump. As I didn’t use the supplied filter I put a plastic ¼” Ryco one in the inlet line.

For Negative earth cars put the black wire under one of the mounting bolts, put a spade type crimp-on fitting onto the red wire and connect it to the original push on Lucas one and you are ready to go. For positive earth cars put the red to earth and the black to the Lucas connector.

As you can see from the above picture I have two pumps, when I remade the petrol tank I fitted a second outlet pipe beside the original but it stopped it 1" from the bottom of the tank (not the bottom of well) and connected it through the front of the boot to one of the pumps, this became the Main pump and the other the Reserve, also a change over switch is fitted through into the cabin.

Switch over to the spare/reserve pump for about a minute every month or so, to make sure it will work if you need it, also if you have it as a reserve and use it as such, make sure to switch back to the main pump when you refill the tank.

Don Hardie 09/05/2009

P.S. I got my pumps from Supercheap Auto ($95.00 each)

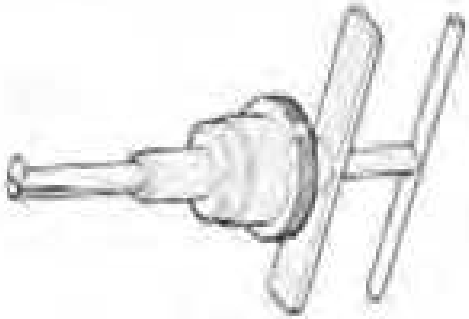

L 6914

L 183A

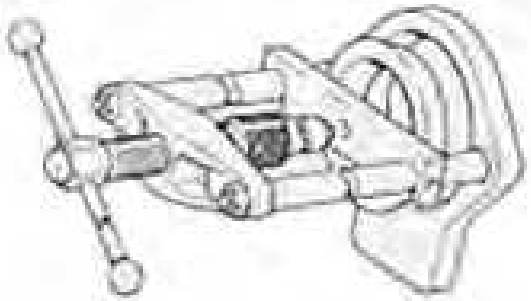

41

British Leyland Special Service Tools (and their modern equivalents)...

TECHNICAL REPORT
ROCKER GEAR RECONDITION

Neil Gould is reconditioning his rocker gear and phoned to say that there's no information in the - workshop manual for the correct fitting of the rocker arm bushes. The sizes fits and clearances are listed in general data and the 4's and 6's are the same sizes. However the info needed does appear in the HAYNES Austin Healey owners workshop manual (available from Regalia or the club's Library). As you can see, the split in the bush goes to the top and the oil-groove to the bottom. The ends of the oil groove line up with the hole in the rocker shaft and the hole in the rocker arm that feeds the push rod. If you're careful and accurate you can predrill the side hole in the bush and press it in to line up with the hole in the rocker then drill the top one through the rocker. Check your work carefully and make sure the holes do line up. The correct way is to grind and remove the rivets and drill the hole after the bush has been pressed in, then drill the upper hole. Make sure that the lubricating holes in the rocker shaft and arms are all clear before you reassemble. If you've opted for the correct way you'll have to make up a dozen rivets and weld them in. Finally ream the bushes to the correct size.

Rockers and rocker shaft - examination and renovation

1. Remove the threaded plug with a screwdriver from the end of the rocker shaft and thoroughly clean out the shaft. As it acts as the oil passage for the valve gear, also ensure that the oil holes in it are quite clear after having cleaned them out. Check the shaft for straightness by rolling it on the bench. It is most unlikely that it will deviate from normal, but, if it does, then a judicious attempt must be made to straighten it. If this is not successful purchase a new shaft. The surface of the shaft should be free from any worn ridges caused by the rocker arms. If any wear is present, renew the shaft. Wear is only likely to have occurred if the rocker shaft oil holes have become blocked.

2 Check the rocker arms for wear of the rocker bushes, for wear at the rocker arm face which bears on the valve stem, and for wear of the adjusting ball ended screws. Wear in the rocker arm bush can be checked by gripping the rocker arm tip and holding the rocker arm in place on the shaft, noting if there is any lateral rocker arm shake. If shake is present, and the arm is very loose on the shaft, remedial action must be taken. Forged rocker arms, which have worn bushes, may be taken to your local BLMC agent or engineering works to have the old bush drawn out and a new bush fitted.

3 Check the tip of the rocker arm where it bears on the valve head for cracking or serious wear of the case hardening which will be indicated by flats. If none is present re-use the rocker arm. Check the lower half of the ball on the end of the rocker arm adjusting screw. On Healey engines wear on the ball and top of the pushrod is easily noted by the unworn 'pip' which fits in the small central oil hole in the ball. The larger this 'pip' the more wear has taken place to both the ball and the pushrod. Check the pushrods for straightness by rolling them on the bench. Renew any that are bent.

Eric Rudd has had some timing gears and chain made up to fit the six cylinder cars. The smaller gear is splined to allow adjustment of camshaft timing gears. These are beautifully made with a very strong chain and at $160 per set represent good value.
If you're planing an engine rebuild these are an essential item to have on hand. The price includes sales tax.

CORRECT POSITIONING OF ROCKER BUSH TO ALIGN OILWAYS.

ARROW SHOWS PROPER LOCATION OF BUSH JOINT

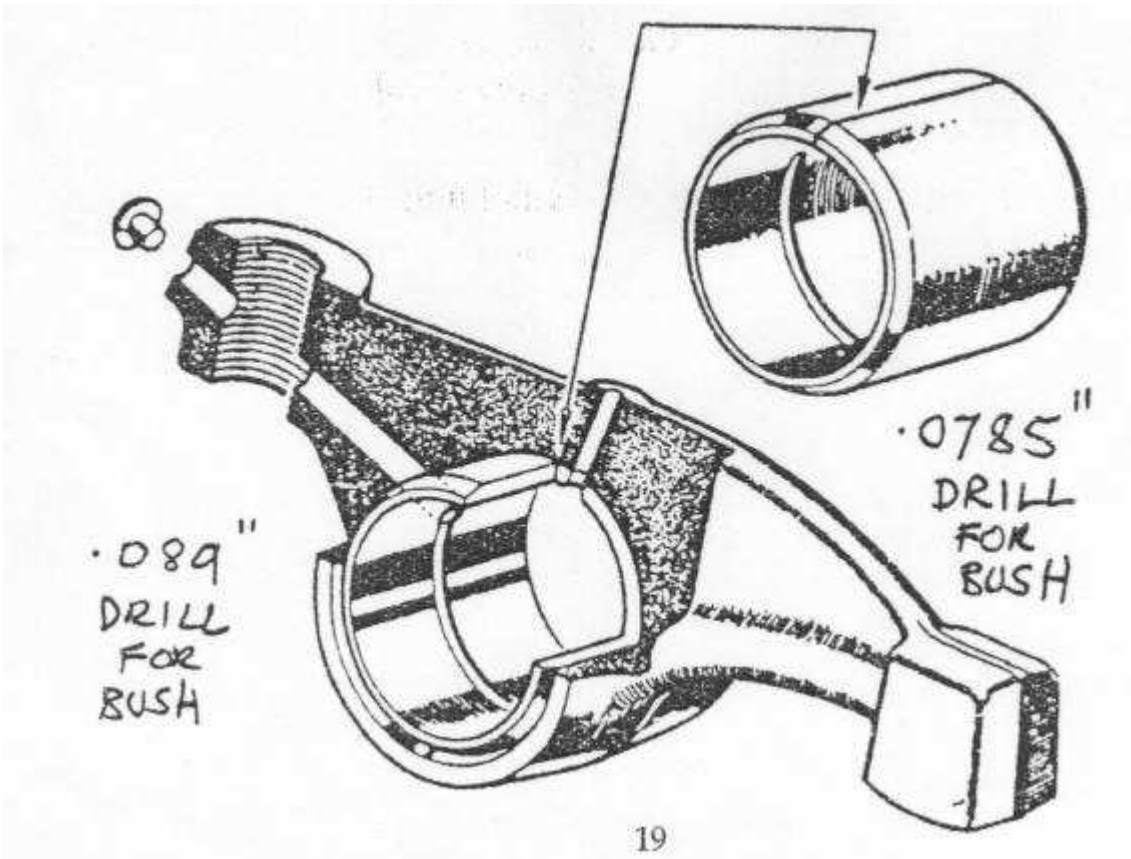

Have Fun
Barry Campbell

N.S.W. AUSTRALIA
Austin-Healey
OWNERS CLUB
FLAT CHAT

July 1995

TECHNICAL REPORT
RUNNING ON

RUNNING ON - Also called "dieseling'. Healeys seem to suffer from this affliction and an underling of the causes can lead to a remedy. Some cures can be simple others require dismantling the engine. It is important to prevent running on as it can damage the engine with undue pressure on bearings and pistons and cause bent pushrods and valves. Typically the driver switches off the ignition steps out of the car and stands there whilst the engine continues to run roughly, shaking the car until it stops and sometimes even runs backwards. Not good and two ways to prevent it

1. Engage 3rd or 4th gear, slowly let out the clutch as the idle speed drops and switch off.
2. Simultaneously give full throttle as you turn off the ignition

WHAT IS RUNNING ON AND WHAT CAUSES IT

When the engine is switched off at idle the flywheel and crankshaft continue to turn. Residual air/fuel mixture is inducted into the hot cylinders and is ignited by a red hot-spot in the combustion chamber This glowing hot-spot can be the spark plug electrodes, the lower threads of the spark plug, an incandescent glowing section of carbon, red hot sharp edges in the combustion chamber. High compression ratio adds to the heat and contributes to the dieseling effect. If the running on continues for a longish period then it must be getting fuel from the carbies**.** Possibly from too high a float level. I've noticed with my car that lengthy idling shakes the ball bearing in the Grose float valves allowing the chambers to flood. This brings fuel to the head of the jet and easily inducted. The rally cam makes idling a bit lumpy. Smoother idling and you avoid this problem.

REDUCING THE TENDENCY TO RUN ON

You'll notice that after a short run and the temperature showing around 170' that run on doesn't occur. Keeping the engine temperature down is a good step forward in stopping the problem.

COOLING SYSTEM

Give it a thorough check out. Hose out all the dead reverse flush and run a system cleaner through and reverse flush again Take out the thermostat before you do this. Refill with clean "soft" water. That is rainwater from outside Sydney or "PURE" water from the supermarket is good. Only add a tri-acid corrosion inhibitor like NULON R45 or WYNNS (4% Sodium Nitrite, 1.1% Sodium Hydroxide, 1.6% Phosphoric Add).

Don't use antifreeze-antiboil unless you really need it. Re-core the radiator with a greater number of down pipes 5 or 6 in a row and staggered. The 100/6 radiator only has 7 gills (fins) per inch where 12 per inch dissipates the heat more quickly. Fit a 160Deg.(70C) thermostat. Use a six blade fan like the "TEXAS COOLER' available from the Healey Factory and make sure the air Deflectors are fitted in front of the radiator. IF you do all this you may well find that it's not necessary to fit an electric fan behind the grille. An alloy head would bring the temp down but a bit exy at $3,000.

CARBURETTORS

A lean mixture burns, more slowly and runs hotter. The engine will run better and cooler if the fuel/air mixture is slightly rich.

TIMING

The combustion chambers will be hotter if the ignition is retarded. With a standard spec engine you should be able to run the specified static setting of 6' BTDC or IO'BTDC for BJ7 and BJ8. If the engine is rebuilt to BJ8 specs then use the BJ8 setting. With the octane rating of super now down to 95 you may have to retard a little to avoid pinging and have the, distributor curve checked on a graphing machine. Usually the primary spring will require tweaking to pull down early advance. This will prevent pinking and maintain the correct static advance.

COMPRESSION RATIO

Higher compression means a hotter engine and a greater tendency to run on. When you have an opportunity measure yours, seriously, consider dropping it to 8.5:1 unless you're planing to race. Mine is now 8.6:1 and runs quite well with a rally cam and ports and chambers polished. Race engines with big cams go to 11:1 but must use racing fuel of at least 100 octane.

SPARKPLUGS

Run the coldest plug you can. I have read that the projected nose UNIZYC Champion plug can contribute to running on, as the tips are hotter.
Because of this they resist fouling better but try using NSC or even cooler NC3. If you experience fouling at low speed an in traffic you may have to put the UNIZYC plugs back. Its worth a try.

GLOWING SHARP PROJECRIONS

The lower two threads of the plugs and in the head can be ground smooth as these edges can be red hot. Whilst you've got the head off smooth off any sharp edges to a rounded polished finish except where they contact the gasket.

IDLE SPEED

A fast idle will naturally induce running on so keep it down to around 500 - 600 rpm. You can also take 10 lb off the flywheel, which will reduce the inertia and doesn't make much difference to the engine.

Well that should keep you busy over the weekend and if you do some or all of the above you may solve the run on problem.

Have Fun
Barry Campbell

N.S.W. AUSTRALIA Austin-Healey OWNERS CLUB FLAT CHAT

February 1995

Big Healey Scuttle Shake

That famous scuttle shake will still be there with a properly aligned and rebuilt front suspension. Bad front suspension only makes it worse.

The bug-a-boo is that Jensen spot welded the firewall to the frame and kept spacing out the spots as they built more cars to save labour costs.

Geoff used to have to get on them to spot well closer together.

The real cure is to weld the transmission opening solid to each adjoining piece and the frame plus reinforce the joint by welding in braces in the engine compartment behind the carb linkage cross bar. I've done this on three cars and no scuttle shake at any speed.

Bill Bolton ©
TRICARB@aol.com

SEE BILL'S ARTICLE BELOW

Preventing Scuttle Shake On A Big Healey

Special thanks to Bill Bolton who supplied this idea, and to Keith Pennell who supplied the photos and explanations.
If you have any questions regarding this modification, please feel free to contact either Keith or Bill:

e-mail Bill Bolton

e-mail Keith Pennell

Keith Pennell writes:
Having had a BJ8 for many years and driven a number of big Healeys, I have experienced varying degrees of shake in the front end. I vowed to solve this in the major restoration of my BJ8 in 1991. The front end was rebuilt and so I assumed that front end was not then the cause of the problem. Numerous truing and balancing of wheels over time helped considerably, but did not completely eliminate the trouble as there was always that "low level" vibration at highway speed. The tires were never shaved although this may have helped.
Upon aquisition of the BN7 in 1993 I decided that I was going to attack the problem more aggressively. I had heard and read the opinion that the big Healeys' vibration was inherrent in the superstructure and that there was even a harmonic at certain frequencies characteristic of the chassis.
It seemed to me this motion must be a lateral one in the scuttle structure as I could not see how the motion could be in the fore/aft or vertical directions. Upon examination of the scuttle I ruled out certain cross bracings from scuttle to inner sills and/or main rails as something was always getting in the way - the engine! Therefore, the only logical possibility seemed to be to reinforce the transmission box as I call it - the roughly box-shaped part of the scuttle above the bell housing.
I had the idea of welding in some angle iron with small gussets in the two corners in this box. (The gussets were never added as later they seemed to be an overkill.) I discussed the idea with John Vrugtman whose opinion I value very much. We also considered welding a plate cut to fit to the vertical portion of the box. I still liked the angle iron solution best. In running this idea past the list, I received a return from Bill Bolton who had performed this same mod to more than one car already. Boy, great minds run in the same gutter!!! Thanks to Bill. The one significant suggestion he added was to weld solid the box on the cockpit side which I did. If one looks there are only a few small welds there originally.
Here are the before and after shots of the mod. Sorry for the quality of the pictures as I am not a photographer.

The angle iron is 3/4 stuff salvaged from a real estate sign frame! This view is a before picture taken from an angle below the front crossmember. Welds were on both edges of the angle and roughly 1 inch long and laid every 2 inches. On the passenger's side the piece runs from the main rail all the way up and and a relief cut is needed at the solenoid hole. The angle is welded hard to the top of the main rail. To me this is the weakest link in the mod but I could not come up with a satisfactory way to attach the angle iron better on this side. Maybe someone else can.

This is the finished version. On the cross piece two cutouts had to be made to allow for the mounting of the accelerator linkage cross shaft brackets. The cutout amounted to about 7/8 x 3/8 for each. Note that little of the mod will be seen once the car is finished. If one is so motivated the open spaces could be filled with a bead of seam sealer to dress up the mod and keep out debris/water.

On the driver's side the angle runs from the bottom of the main rail up. Some cutting in the angle is needed for the tunnel opening and because the footwell face is not flush with the inside surface of the rail. There the iron is welded solid to the rail.

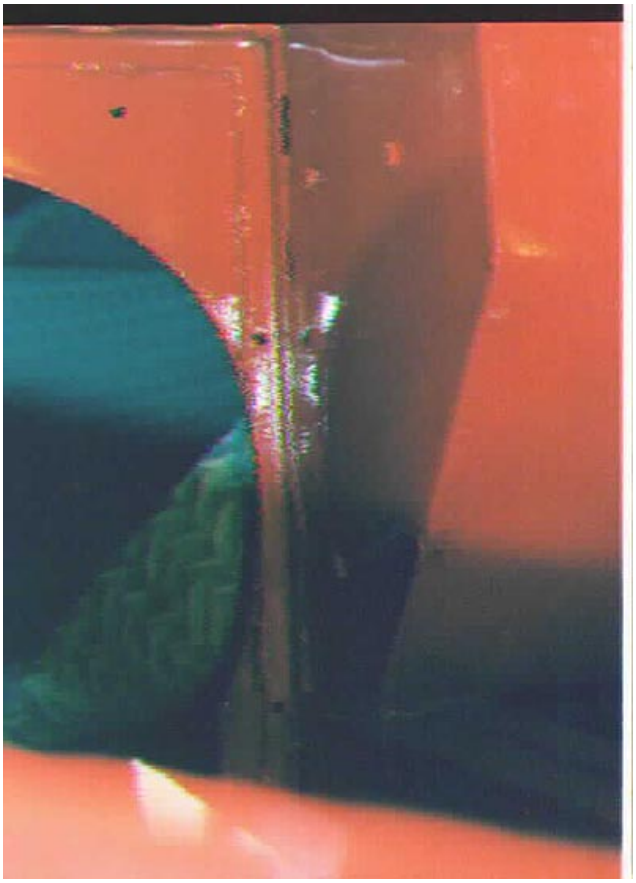

This view shows the painted driver's side.

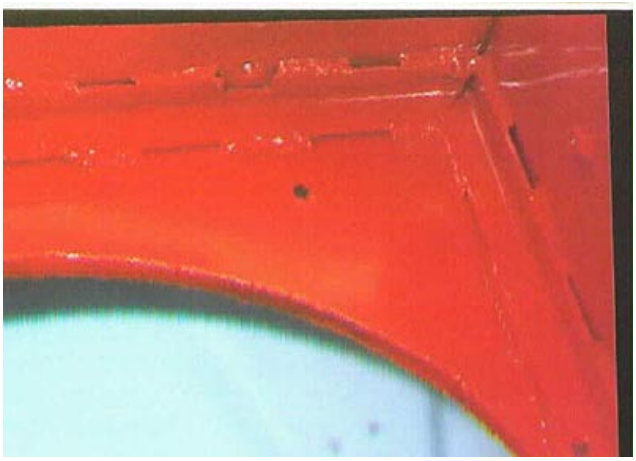

This view shows the upper corner, driver's side. The cutout for the linkage bracket is visible near the top center of the photo.

Back to my page

OZFROG DOT 5 SILICONE BRAKE FLUID

Ozfrog Dot 5 silicone brake fluid has been specially formulated to provide compatibility with SBR, EP, neoprene, natural rubber, and other brake system materials. In addition, it offers increased protection against thermal, oxidative and abrasive deterioration in rigorous applications such as vacuum-over hydraulic boosters. Unlike conventional polyglycol fluids, Ozfrog Dot 5 silicone brake fluid does not absorb significant amounts of water. As a result, it does not promote brake system corrosion, its physical properties do not deteriorate with time, and it insures long-term braking performance under extremely high and low operating temperatures.

Other features of Ozfrog Dot 5 silicone brake fluid include:

* Temperature stability - Exhibits relatively little viscosity change over a temperature range of -40 to 550 F (- 40 to 288 C), a vapour formation temperature greater than 495 F (257 C), and a boiling point greater than 500 F (260 C).
* Non hygroscopic non-corrosive-Does not attract or hold large amounts of moisture which cause corrosion, a drastic lowering of the boiling point, and increased viscosity at low temperatures. Humidification as prescribed in FMVSS 116 typically gives 300-350 PPM of H20.
* Chemical stability-Resists degradation and is essentially inert to system components.
* Good compatibility-Does not degrade various rubber seals and plastic or metal parts, and is compatible with conventional polyglycols.
* Good lubricity-Provides good lubrication between metal to-rubber and metal-to-plastic parts in master and wheel cylinders.
* Long-term shelf stability.
* Good dielectric properties.
* Essentially non-toxic and non-irritating.
* Does not attack painted surfaces.
* Meets Federal Motor Vehicle Safety Standard 116 (FMVSS 116) DOT 5 requirements.
* Meets Australian Standard SAA Grade 4 (silicone type).
* Meets Hydro-Vac stroke test requirements.
* Suitable for use in tandem master cylinders.

For further information contact OZ Frog P/L PO Box 70, Morioka Old 4105 or phone (07) 52 4443.

From NEW PRODUCTS in Restored Cars September 1986

N.S.W. AUSTRALIA
Austin-Healey
OWNERS CLUB
FLAT CHAT

REAL HEALEY NATTER

N.S.W. AUSTRALIA
FLAT CHAT

DECEMBER 1999

LOST SHROUDS?

I found two shrouds besides me in the shed, and tried them on for size. It is almost impossible to get the panel gaps correct (see attached photos). Do you think it is because I have only one cylinder as I have heard that the best Sports Cars have FOUR.

VICTA 5 (mph) / 1 (cyl)

P.S. I particularly like the Silverstone style headlights in the grill.

TECHNICAL REPORT

SOLID STATE PETROL PUMPS

Lately, in the club magazine and at monthly meetings, the inspection day at Butler and Rudd's workshop has been referred to as being for club-registered cars. The day is for ALL club members (and their cars), who might like to turn up with the hope of learning a few more secrets about their cars. Those of you who do come along are quite at liberty to donate your car for a bumper-to-bumper inspection and constructive discussion re the condition of it. Don't forget - SEPTEMBER 25th at 9.00a.m.

In the latest Australian Classic Car magazine there appeared an advertisement by SUMidel about a solid state SU fuel pump. I rang SUMidel and spoke with Bill Bressington who told me that it had taken 8 years for this pump to be developed to retail stage. This pump would appear to be a godsend for those cars that do not get used on a regular basis as there can be a build up of ambergris on the points, which contributes to a lack of regularity. This pump is a new item. There is a kit available to convert pumps to solid state when doing an overhaul of the pump, however, in most cases the coil in the pump is not checked and can therefore let the pump down. The cost of an overhaul and conversion of the pump to solid state is approximately $140.00. The retail price of the new pump is about $207.00. The AHOC price is $189.00. I think the extra for a new pump would be well worth the peace of mind gained. (This is not a paid advertisement - no payola is involved).

Happy Pumping
Ian Howard

N.S.W. AUSTRALIA Austin-Healey OWNERS CLUB FLAT CHAT

October 1999

Truing Wire Wheels

By Rod Schweiger ©

Part 1 of 2

Let me begin this piece by saying that this is the way I true my wire wheels not necessarily THE way to true wire wheels. It works for me, therefore, it should work for you. You can true wheels that are 13, 14, 15, 16, or 19 inches and it doesn't matter if they have 48, 60 or 72 spokes. Truing wire wheels is logical, it doesn't require tremendous skill, and only requires a few tools. It does, however, require an understanding of what you are doing.

The tools that you will need to true wire wheels are: a spoke wrench. Moss Motors sells a good one, part # 385-800 at $11.95. I found that the one I got needed the opening made bigger with a small file and this only took a minute or so. A fixture to hold the wheel while spinning to check for true is a great help. I make my own from an old MGB hub, brake rotor and a piece of pipe, see Fig. 1. You can also jack up the front of your MG and use the front hub for this task. You should also have a supply of spare nipples and spare Spokes, long and short appropriate to the size wheel you are working on. While it is easier to work on the wheel with the tire removed, you can replace spokes and nipples and true wheels with the tires mounted on the wheels. You will need to break the bead on the front edge of the rim (let all the air out first) by jumping on the tire to break the bead. You can then hold the tire down to expose the nipples with some small blocks of wood.

There are two types of wire wheels that you may encounter, chrome plated and painted. While chrome plated wires are the most expensive and are the most glitzy, they have a problem that the painted don't. The problem is rust. Sure, painted wires rust just as chrome wires do. But with painted wires we can use heat to free the spokes that have rusted to their respective nipple. With chrome wires the enthusiast will have to use patients and liberal amounts of penetrating oil, and still the rusted spoke may eventually need to be cut out of the wheel, thus destroying that spoke and nipple.

To free a rusted spoke on a painted wheel, heat the nipple to cherry red hot and then immediately quench with a rag soaked in cold water. When quenching, you will hear a noticeable pop that will tell you that the spoke has freed itself from the nipple. The heat process will discolor the spoke and the nipple. If the wheel is to be painted, so what? If the wheel was a chromy, the heat discoloration will have spoiled the spoke and the nipple.

If you have an unserviceable wheel of the painted variety, with some good spokes and nipples, you can use the heat method to lay in a supply of spare spokes and nipples. This is a good rainy day project.

There are probably only two reasons that you will ever have to fuss with your wire wheels. Reason one: you have broken spokes in the wheel and want to replace them. Reason two: the wheels are badly out of true and even a good balance job at the tire shop won't make them run straight. Let's begin with problem one. If you have a wire wheel handy, take a look at it while you read this, if you don't, look at Fig. 2.

All wire wheels have two length spokes. Long spokes radiate out from the hub at the point nearest where the knock-off attaches, and short ones that radiate out from the wide part of the hub nearest the brake drum. The two different length spokes each serve a different function. The short spokes control the roundness of the wheel, while the long spokes control the lateral runout of the wheel. Another way of describing what the long spokes do is to say that the long spokes can cause the wheel to wobble if they are not set right.

When spokes break it is usually the long ones, and they always break up near the hub. These spokes are not hard to replace except that to install the new spoke and thread it into the appropriate nipple will always require that you remove, one, two or sometimes three short spokes to install one new long spoke into its nipple. On painted wheels, if the spokes won't break loose use the heat method. If working with plated wheels, use penetrating oil and patience and if that won't work, cut the spoke out and replace it with a new one (you knew that those chrome wire wheels were going to be expensive when you bought them.) Coat the new spokes threads with Permatex Anti- Seize lubricant (part no. 133K) so that the next time you do that spoke it won't fight you. Of coarse you may be fussing with that spoke again. Remember, it's part of the hobby.

Once you have all the broken spokes replaced it is time to snug them up. Try to tighten up the spoke and nipple until it is the same tension as the spokes around it (ones you didn't change.) You can tell the tension of the spoke by tapping the spoke with the spoke wrench and listening to the sound. It should ring. If the sound is dull, the spoke is too loose. Try to make it sound like the adjacent spokes.

When the spokes are snugged up, it's time to test the wheel for true. Our goal it to try to get the wheel to within 1/16" to an 1/8" of true. Don't go and frustrate yourself by using a dial indicator. This job doesn't require that type of hair splitting accuracy. Set the wheel to be trued on your truing fixture (Fig. 3) or your front hub. You will need a piece of stiff wire as a pointer. Important, set the pointer to point to the inside of the rim on the folded edge where the tire seats.

Don't try to set the pointer to the outside edge (where the balance weights go.) If there is any damage to that part of the wheel and there often is, using it as the reference point will only further frustrate you.

Now spin the wheel and watch the pointer. If the wheel wobbles on a lateral plane, the outside spokes need work. If the wheel isn't round, then the short spokes need work. Start with the roundness problem. If the wheel is within a 1/16" or so, okay. If it is an 1/8" or more out it will be necessary to tighten some of the short spokes to get it round.

Important, before you tighten any spokes you will need to loosen the spoke(s) that are in this case, at 90 degrees or at right angles to the spokes to be tightened. If you don't loosen before you tighten, then something is going to break. If it does don't despair, replace the broken spoke(s) (you are already good at that) and remember it's part of the hobby.

Once the wheel is round you can start working on the long spokes to make the wheel stop wobbling. Use the same technique. Loosen the spoke(s) which in this case are 180 degrees across the wheel then tighten the necessary ones to bring the wheel into true. Keep spinning the wheel and watching the pointer to see how the work is progressing. When the wheel is reasonably true, go around and tap the spokes with the spoke wrench and test the spokes for tightness. They should all have approximately the same sound. If necessary snug them up. Check again for true by spinning the wheel and checking the pointer.

When the wheel is true and the spokes are snug, look at the nipples on the inside of the wheel (the part normally covered by the tube) and make sure that your new spokes don't protrude through the nipples. They could pop your tube. If they protrude through the nipple, grind them down flush. Now you can prep the wheel for priming and painting. After painting, put a double wrap of duct tape over the nipples on the inside of the wheel to protect your tube. Finally use a thin smear of silicone seal on the inside of the hub on the ends of the spokes to keep the grease on the hub splines from running down your freshly painted wheels.

Finally, a few words on wheel balancing, it has been my experience that wire wheels are much more sensitive to wheel balance that a disk wheel. It is normal for a balance job on front wheels to last only three or four thousand miles. At that point the steering wheel may shimmy (usually at some particular speed) indicating a balance job is needed. I always had good luck with a dynamic (spin) balance. Any good tire shop can do it.

I hope this article helps you with your wire wheels. Special thanks to Bill Traill for sharing with me his insights into this subject.

Reference

Respoking Wire Wheels, Special Interest Autos #101 P.30. This issue is available from: SIA Back issues, Box 196, Bennington, Vermont 05201 for $5.00

Part 2 of 2

This month we'll take a look at the Rudge-Whitworth system of wire wheels. This design was invented over 50 years ago and the car makers in Great Britain used this same principle until 19,8; With this seemingly simple design, cars around the world have traveled countless miles in a sporting fashion. With the finishing of manufacture by Dunlop of this type of wheel, preservation is now left to classic and antique car buffs.

In order that wire wheels can continue to be used they must be maintained, repaired and kept in running condition. They come in several sizes of diameter, width, and varying numbers of spokes. For each wheel there is a nut or nipple, and each wheel has a hub and a rim. So, you can see that a 48 spoke wheel 96 separate pieces to maintain. Add to these the splined hub and outer rim, plus the driving hub or hub extension and the wheel nut or knock-off, and you have an even 100 pieces at each corner of your car to look after. And don't forget the spare.

When buying a car with wire wheels, it will behoove you to inspect the wheels for deficiencies, and when considering converting a disc wheeled TD or TF to wires, first ponder the cost of acquisition and/or repairs. It will be necessary to cough up upwards of $1700 for painted and $2100 for chromed kits (new). If you are able to obtain used parts for the conversion the cost will decline considerably. Or will it? Read on.....

Let's talk about maintenance. Once each year, for a car that is driven regularly (more often if the weather is wet or very dusty), the wheels must be removed, clean and grease applied to the splines of both wheel and hub. Use a grease that has a high silicon content or a marine waterproof type to prevent entry of water and other foreign elements. While performing this ritual of upkeep, each spoke should be inspected for looseness or over tightening. A simple way is to run a screwdriver or other metallic object around the wheel, touching each spoke in turn. A mistightened spoke can be detected by listening for any change in the ring produced by the contact of the tool on the spokes. A dull thud indicates looseness and a twangy sound, higher pitched than the others, denotes an overtightened one. Any defect in the spokes must be remedied before further use, lest deterioration of the wheel results.

At this time you should further inspect the wheels to detect any that are bent, wobbly cracked, out of round, or damaged in the splined area. Also look for cracks or distortion where the spokes or nipples come through the hubs or center rims. If any one of the spokes or nipples is pulled through, I'd recommend replacement of the defective hub or rim. There are other things to look for too.

If there is evidence of rust at the juncture of the nipple and spoke, the culprits will have to be replaced. If the splines on either the wheel or driving hubs are not sharply pointed or are badly pitted due to corrosion or wear due to looseness of the knock-of then replacement of these components is in order. Driving hubs may be repaired by a competent machine shop, but be prepared for a sizable bill. Most wheelwrights have replacement hubs for 48 and 60 spokers, and outer rims for 13", 14" and 15" wheels, and

spokes of most any length. For the owners of those wheels which have been damaged, and for which there are no spare parts, expensive repair jobs are all that you can look forward to.

Looking now at the first figure on page 12, you can see the components and principle of the system. You will note that there are two points of contact that hold the wheel in a manner that will allow it to run true and without wobble. The inside (or back) taper contacts the inner part of the wheel hub, and the hub nut contacts the outside taper of the wheel. If any part of these two junctures is distorted, damaged or even dirty, the wheel cannot run true. Each surface should be cleaned thoroughly, filed or sanded if necessary, to remove all rough spots, and greased before installation. If this procedure is followed, and the wheel, after tightening, still seems to be loose you must first check that the original nuts and/or washers that hold on the brake drums are used. If ordinary nuts and/or washers are used, they may move out to where they interfere with the inner face of the wheel hub. Now, if the wheel is still loose or wobbles or rotates when you grab and apply force to it in the various directions, the improper seating of the tapers is to be checked next.

The outer taper is the culprit most of the time. As a result of over tightening, the knock-off can be bellied out to the point that it bottoms on the outer taper which can be necked down too. Any combination of these two defects can result in the same condition. Its usually easy to find a bad outer taper. Just note the gap between the knock off and the spokes. There should be a gap of about 3/32". If there is 1/16" or less, and the wheel is still loose, absolutely no further tightening should be attempted. This can only result in further deterioration of the condition. To determine which component is bad, you must first have a wheel, knock-off and driving hub known to be in good condition. Using the following methods you may determine any taper problems.

Remove the wheels and lay a suspect knock-off on the good wheel. Compare the distance between the good and suspect knock-off in relation to the spokes. A bad knockoff will have less clearance and may even touch the spokes of the wheel. Comparing a good knock-off to a suspect and the good wheel will determine whether or not the outer taper of the wheel is good. If these tests prove that the knock-off and outer taper are in good shape, mount the wheel to a known good hub and check for contact of the inner surface of the wheel hub and the brake drum or drum studs and/or nuts. Any contact at this point will condemn the wheel hub. Conversely, a suspect driving hub may be tested in this same manner, using a good wheel.

A bent wheel is usually easily detected by visual inspection, as is one with excessive eccentricity. By mounting a wheel to a rear hub and rotating it with a stationary object as a reference point, either of these conditions can be readily detected.

A clunk may sometimes be heard when changing directions as the car is moved, or when starting out. Assuming the wheels and hubs are in otherwise good condition, one must now suspect the driving splines are not up to snuff. Splines of both wheel and driving hub may be bad. Or the knock-offs may simply be not tight enough. Always tighten the

knock-offs with the wheel off the ground. Sufficient force can be applied, and do not give them an extra whack with the car on the ground. You know what the looseness could be now, don't you?

Having removed the wheels, inspect the splines of both wheel and driving hub If they are badly pitted or rounded off in more than a couple of well-spaced areas, you know what to do. And, if you insist on repairing or respoking your own wheels and on your own, here are a few pointers:

1. Do not attempt to straighten a bent rim by yourself. Find a good wheelwright who offers straightening service.
2. Since a wire wheel is a precision object and is strung with equal and taut settings, in respoking one, be sure to use only new spokes and nipples. Don't take a chance on old or rusted ones as the super fine threads can pull right off on tightening the nipples.
3. If you are leaning toward chroming, even of new spokes, forget it' Unless your spokes are specially stove-chromed there will be a residue of moisture that can lead to early spoke failure trapped under the chrome shell. Besides this, the spokes can lose up to half their strength if improperly done. Buy only commercially produced chrome spokes. Note too that stainless steel spokes have recently come on the market.
4. Before dismantling a wheel, make sure you know how it's supposed to go back together. Save one wheel for a pattern or take a picture or make a drawing to ensure proper assembly.
5. Cut with a pair of diagonals all spokes and remove the pieces easily.
6. Wire brush both rim and wheel hub and inspect for cracks at the spoke or nipple holes. Sometimes minor damage can be welded. Generally cracks only.
7. Insert all spokes and nipples loosely and inspect the assembly for correct location of all spokes.
8. Make a tool from a 1/4" or 3/8" socket screwdriver bit. (A) Make sure the blade is of the proper thickness to fit the slot in the nipple and wide enough so a notch (B) can be cut out of the center to allow the spoke to enter the notch as the nipple is tightened.
9. Now, screw down the nipples only just snug until about the same amount of spoke shows in each nipple. Use the valve stem hole as a starting point and snug up the first set of inner and outer spokes. Use an alternating and opposing pattern of tightening. Next do the pair exactly opposite the first. Then, it's back and forth to a pair next to the first, and so on, rotating the wheel always in the same direction while tightening.
10. The wheel must now be set up in a jig on the bench. A jig can consist of a hub rotating on a spindle. A much easier way is to mount the wheel to the rear hub of a car. Make sure the axle and hub are not bent, of course. If a front hub were to be used, there might be too much play in the bearings to allow proper truing.
11. Some indicators must now be set up to check the radial (up and down motion) and lateral (wobble) runouts. Place solid objects above the rim's inner and outer edges and some just to the side of each. Secure some bars, screwdrivers, or the like to

the car frame, jack stands or other support so the runouts can be monitored during the tightening process. Acceptable lateral runout is only 0.025" and radial runout 0.050". Adhering to these standards will ensure that you will not encounter difficulties when the wheels are put into service.

12. Proceed now to the final tightening. Begin as before with the first pair of inner and outer spokes and continue around until all are tight and the runouts are within tolerances. Recheck your work by tapping each spoke while listening for similarity of ring, correcting all deficiencies. Do not over tighten. Proper torque is about 30 to 40 inch pounds, or 3 to 4 foot pounds. In most cases a snug twist with palm-grip type driver will be tight enough. If you wish to use an anti-seize compound, such as Lock-tite, you must consider that the torque specs will change to some degree, so a combination of 'feel' and the right sound of each spoke will be the factors in obtaining the proper adjustment. Remember, do not over tighten'
13. You must now remove by filing or grinding the ends of any spoke standing proud of any nipple, and replace the rubber strip over the nipples. Lacking the strip, you may use a few layers of plastic tape to protect the inner tubes from puncture.
14. Clean the inside of the wheel hub and cover each spoke end with silicone gasket sealer, such as R.T.V., to prevent grease on the splines from traveling up the spokes. Do not get any sealer on the splines.
15. Paint the wheel, now, using a spray can of aluminum enamel, followed in about fifteen to twenty minutes with a coat of Krylon or other clear spray. This will give the wheel that brushed" look. Any runs of the clear coating can be immediately touched up by re spraying the area with aluminum and following later with more clear.
16. Finally, once your wheels are in perfect order they should be balanced. I recommend they be spin -done on the car. This ensures that all components, wheel, hub and knock-off are in proper equilibrium. All tires must be hand mounted or dismounted on all wire wheels.

Once properly done, by you or a professional, your wheels will carry your MG down the road, tracking as though it had been seeking, and finally found it.

Many thanks to David Evans, from whose recent articles in Import Car, much of the material in this column was obtained.

AUSTIN-HEALEY HUNDRED

(MODEL B.N.1.)

SPECIAL EQUIPMENT AND TUNING INSTRUCTIONS

THE AUSTIN MOTOR COMPANY LIMITED LONGBRIDGE
BIRMINGHAM

In association with the
DONALD HEALEY MOTOR COMPANY LIMITED
THE CAPE, WARWICK

Printed in England *by* James Upton Ltd., Birmingham **Publication No. 113H**

INDEX

SECTION

SECTION A

ENGINE

To enable the engine performance to be increased a kit has been produced. This kit was fitted to the Austin-Healey cars that completed the Le Mans 24-hour race in 1953.

Le Mans Engine Modification Kit, Part No. P.280

Austin Part No.	*Description*	*Number off*
1B.2814	Valve Spring (Outer)	8
1B.2813	Valve Spring (Inner)	8
1B.2811	Valve Spring Cup (Upper)	8
1B.2812	Valve Spring Seat (Lower)	8
AUC.9004	1¾” Carburetter (Front)	1
AUC.9005	1¾” Carburetter (Rear)	1
1B.2893	Aluminium Carburetter Manifold (Front)	1
1B.2894	Aluminium Carburetter Manifold (Rear)	1
7H.1733	Carburetter Stud	8
7H.1734	Carburetter Gasket	2
6K.9688	Nut	8
LWN.205	Spring Washer	8
7H.1724	Carburetter Cold Air Box	1
7H.1725	Carburetter Air Tube	1
2H.979	Strip and Buckle Clip	1
17H.5247	Grommet	2
2K.8479	Set Bolt	4
2K.8606	Shakeproof Washer	4
1B.2892	High Lift Camshaft	1
1B.1219	Tab Washer	1
7H.1726	Steel Face Cylinder Head Gasket	1
7H.1727	Distributor—Special Advance Curve	1
1B.2751	Valve Guide Shroud and Oil Retainer	8
7H.1728	Near Side Bonnet Frame Support	1
2H.731	Lock Washer for Starting Nut	1

The Le Mans Engine Modification Kit enables the horse power output of the engine to be increased from 90 B.H.P. at 4,000 R.P.M. to 110 B.H.P. at 4,500.

The effect on performance is marked, and results in improved acceleration and speed. The low speed performance of the engine is not impaired.

Maximum performance will only be achieved by correct and careful fitting of the Kit, and the following installation instructions should be closely followed.

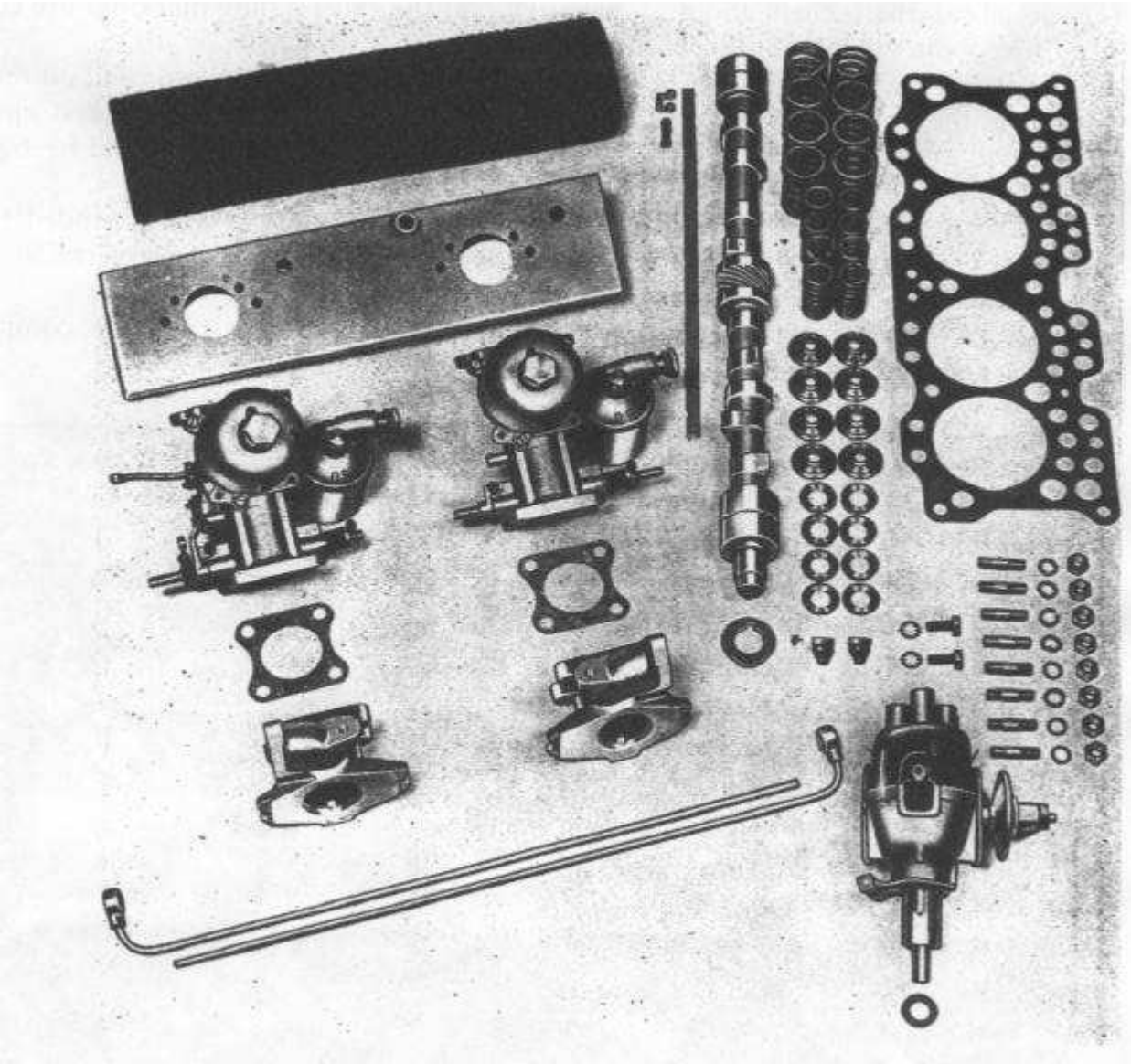

Fitting Instructions

Drain off cooling water and remove the bonnet, radiator, radiator hoses, cylinder head, carburetters, and manifolds. Drain off engine oil and withdraw oil reservoir, oil pump, and distributor. Remove engine-mounting bolts (4 at each mounting), detach tappet cover, and withdraw the tappets.

Extract the crankshaft pulley, take off the timing case cover, remove camshaft gear and chain, and withdraw the camshaft itself.

Next, strip the cylinder head and carefully smooth off any roughness within the combustion chambers and ports.

Match and fit the inlet and exhaust manifolds and carburetters to ensure that no steps exist at the joints. It is important that the carburetters are carefully aligned so that the spindles are in line and the mechanism returns freely to its stops.

The valves should be lightly ground in until perfect seatings are obtained. Fit the special camshaft, chain and gear, ensuring that the valve timing markings are correctly lined up. Refit the distributor with the timing set at 9° **B.T.D.C.**

Rebuild the engine and set the tappets to .015". Refill the radiator and oil reservoir, and when the engine has warmed up, re-tighten the cylinder head nuts and check the engine and cooling system generally for leakages. Cylinder Head should be tightened to 65/70 lbs

A road test is now essential for final adjustment, and it is recommended that the most satisfactory ignition setting is arrived at by timing top gear acceleration against a stop watch.

Under no circumstances should any attempt be made to raise the compression ratio by machining the cylinder head.

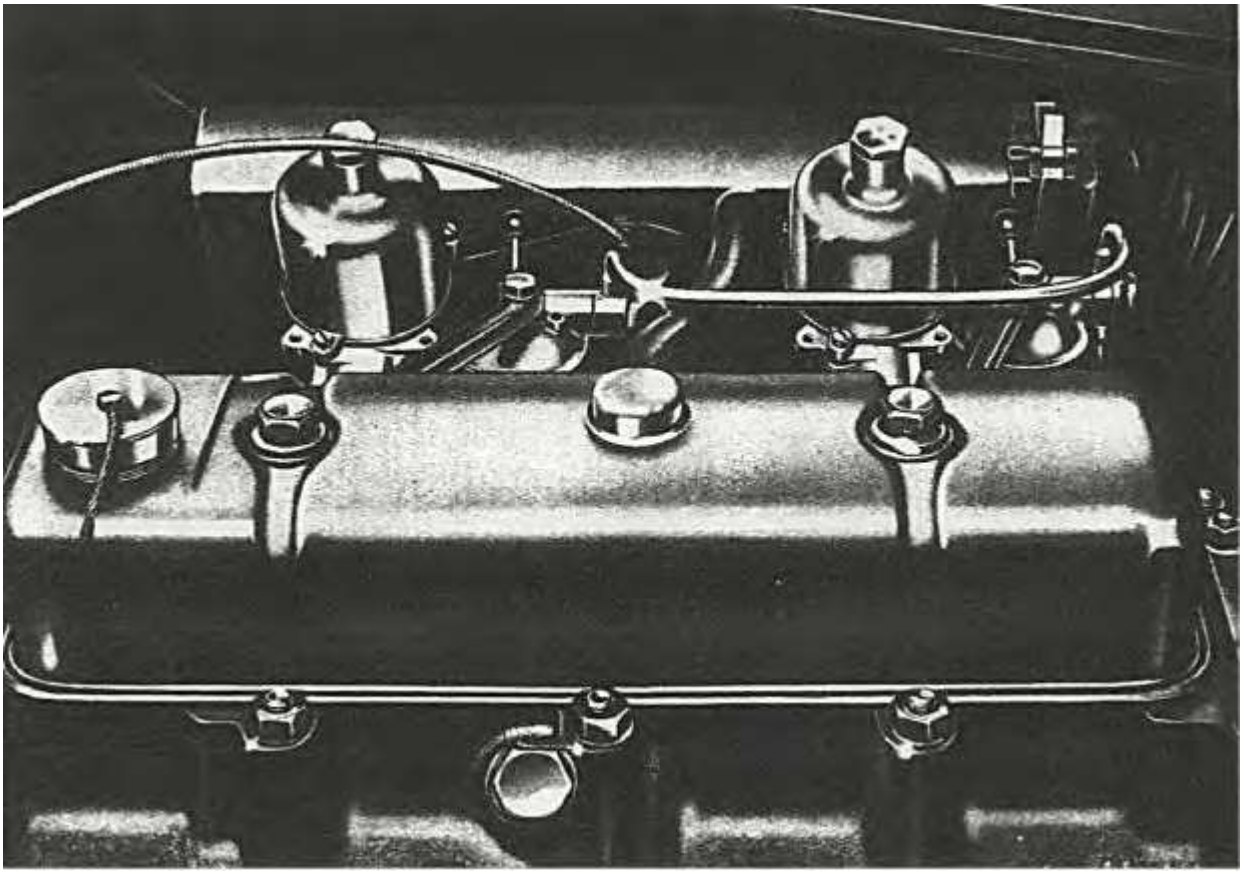

****

SECTION B

AXLE

The standard production axle ratio is 4.125 (8/33) an alternative 3.667 (9/33) axle ratio is available as an extra. There are three possible overdrive ratios permitting a selection of six Overdrive Top Gear Ratios. The Overdrive ratios are 22%, 28% and 32%.

Rear Axle and Overdrive Combinations

(a) 4.125 Axle with .778 Overdrive = 3.21 Overdrive Top Ratio

(b) 4.125 Axle with .756 Overdrive =3.12 " " "

(c) 4.125 Axle with .820 Overdrive = 3.38 " " "

(d) 3.667 Axle with .778 Overdrive = 2.86 " " "

(e) 3.667 Axle with .756 Overdrive = 2.77 " " "

(f) 3.667 Axle with .820 Overdrive = 3.01 " " "

It will be readily seen that this selection permits a variation to be made to suit most conditions. The road speed calculations have been based on the Dunlop Road Speed Tyre inflated to a pressure of 29 lbs./sq. inch (2.039 kg./cm^2.).

An allowance has been made for tyre increase in diameter, which occurs at the higher speeds.

Relationship of Road Speed — M.P.H. to Engine Speed — R.P.M.

4.125 Axle					3.667 Axle			
M.P.H.	*Direct Top*	.820D	.7780D	.7560D	*Direct Top*	.820D	.7780D	.7560D
120			5000	4850	—	4700	4500	4350
115	——	——	4800	4650	—	4500	4300	4150
110	——	4850	4600	4450	—	4300	4150	4000
105	——	4600	4400	4250	5000	4100	3950	3800
100		4400	4200	4050	4750	3900	3750	3600
95		4200	3950	3850	4550	3700	3550	3400
90	4800	3950	3750	3650	4300	3500	3400	3250
85	4550	3750	3550	3450	4050	3300	3200	3050
80	4300	3500	3350	3250	3800	3100	3000	3900
75	4000	3300	3100	3050	3600	2900	2800	3700
70	3750	3100	2900	2850	3350	2700	2600	3500

The selection of a ratio for a particular course is a difficult matter and it can make a very great difference to lap times. Grand Prix Racing Teams usually take a selection of ratios to course and try them out in practice to choose the best ratio. This is an expensive process and is generally difficult due to the available time.

Our recommendations are based on the Austin-Healey with Le Mans Engine Kit and single aero screen.

High-speed circuits with long straights such as Le Mans and Reims:
3.667 axle and .778 overdrive

Fast circuits such as Sebring and Silverstone full circuit:
3.667 axle and .820 overdrive

Short distance aerodrome circuits with many comers and short straights:
4.125 axle and .820 overdrive

Sprint events such as Standing Kilometer: 4.125 axle and .820 overdrive

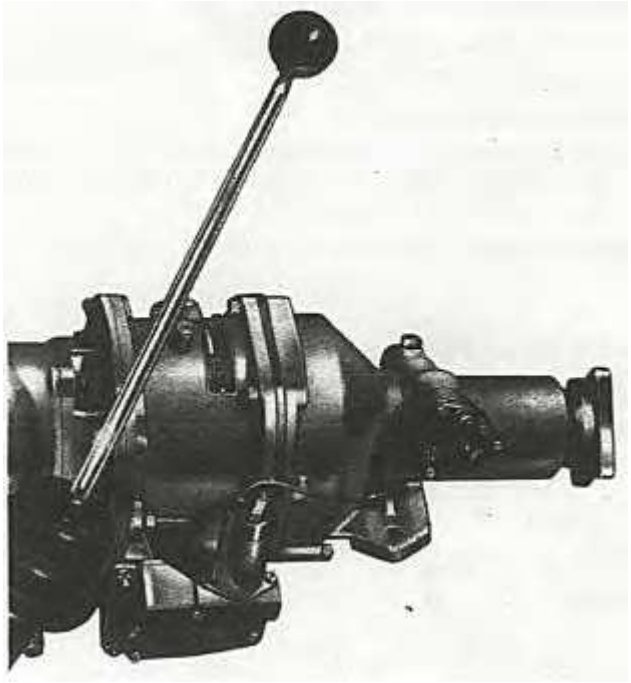

AUSTIN PART NUMBERS

1B.3691 .. .778 Overdrive Assembly 28.6%

7H.1735 .. .820 Overdrive Assembly *22%*

1B.3651 .. .756 Overdrive Assembly *32%*

1B.3642 .. Overdrive Gasket

B3-365 3.667 Axle Ratio Crown Wheel & Pinion

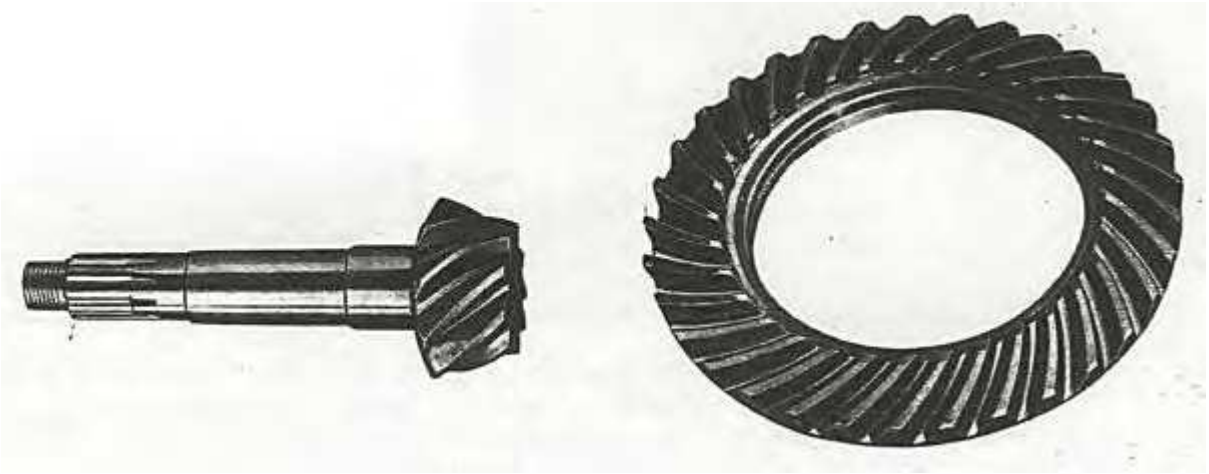

In general the 3.667 axle and .820 overdrive is the most suitable combination for racing. The gearing should be such that 4,500 R.P.M. is reached on the straight. The engine should not be allowed to exceed 4,800 in racing. The 3.667 axle ratio has an advantage over the 4.125 as it gives a higher speed in direct gear.

The overdrive governor on centrifugal switch should be shorted out for racing. This is quickly done by putting a lead between the two terminals of the switch. This switch is located on the extreme rear end of the overdrive.

The use of .756 overdrive and 3.667 axle ratio is not recommended as the overdrive top is too high for all circuits in use to-day.

****

SECTION C

SUSPENSION

For competition work and continental touring a stiffer suspension is generally desirable. We have developed a stiffer suspension the fitting of which increases cornering power and stability. This consists of: —

Austin Part No.

1B.8935 .. Harder front shock absorbers (Standard equipment from Chassis: L.H.D. 153855 on R.H.D. 153857 on)

7H.1721 .. Stiffer anti-roll bar

1B.8929 .. Stiffer rear springs (Standard equipment from Chassis: L.H.D. 152233 on R.H.D. 152420 on)

For most competition work the Dunlop Road Speed Tyre is satisfactory. For severe Racing conditions the Dunlop 550 x 15 R1 Racing tyre should be fitted.

The recommended tyre pressures for competition work are 26 lbs./sq. in. Front, 29 lbs./sq. in. Rear. Drivers may wish to alter pressures to suit their own tastes. The tyre manufacturers representatives if present will generally advise on pressures.

Always have sufficient fitted spare wheels available balanced and at the correct pressures for changing.

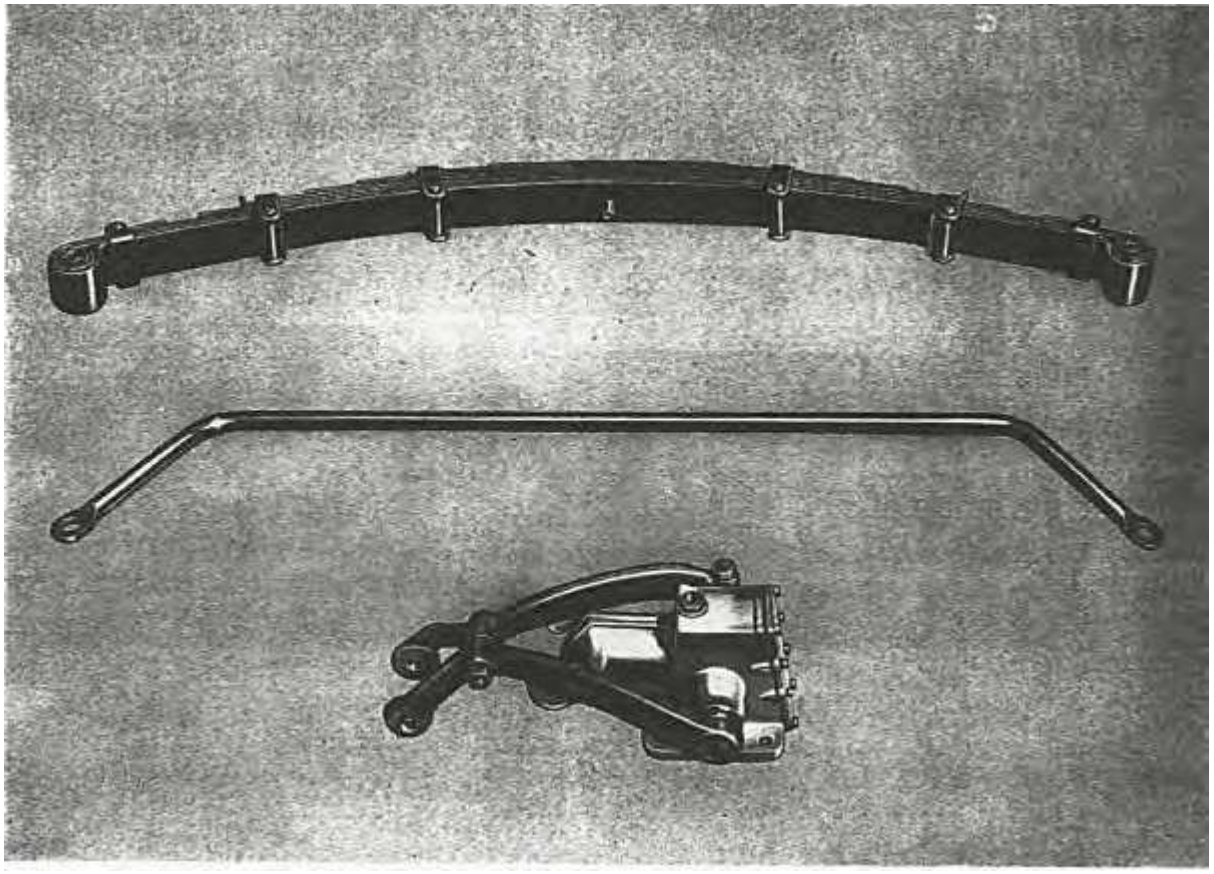

The race type rear spring is fitted with safety leaves.

****

SECTION D

PETROL TANK AND FUEL SUPPLY

The standard Tank is suitable for most normal purposes. We have developed two alternative petrol tanks. The 15-gallon tank is intended to provide a greater range and a reserve system. The 25-gallon tank is designed for particularly long distance races with a stipulated minimum distance between refueling beyond the capacity of the 15-gallon tank. The 15-gallon tank is about 1 in. deeper and loses very little luggage space. The 25-gallon tank occupies nearly all the available luggage space.

The reserve fuel system is operated by an extra petrol pump and switch.

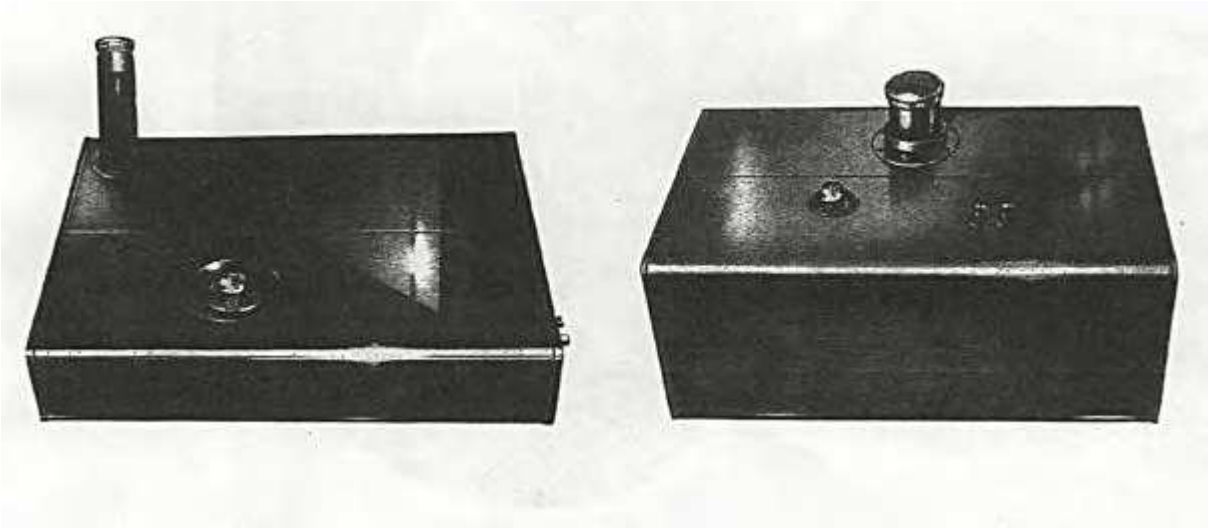

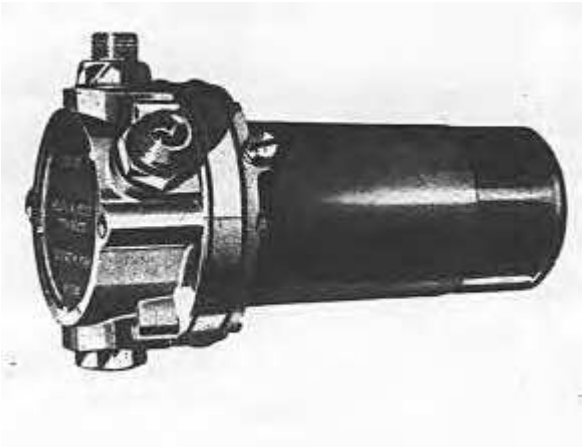

Austin Part No.

AUA.36	..	Petrol Pump
7H.1714	..	15 gallon Petrol Tank
7H. 1715	..	15 gallon Petrol Tank Straps
7H. 1716	..	25 gallon Petrol Tank
7H. 1717		25 gallon Petrol Tank Straps

****

BRAKES

Good braking adds greatly to performance and the pleasure of driving. It is important before racing to be certain that the brakes are giving the best possible performance.

The brakes are Hydraulic with two leading shoe front. Adjustments should be carried out in accordance with instructions.

It is important if the brakes are new or have just been relined that they are used very gently until a perfect bedding is obtained. Do **NOT** apply new brakes fiercely or the drums and linings will be damaged and the braking efficiency impaired.

If new drums have been fitted, these drums must be used gently until the brakes and drums are correctly bedded.

Part No. 7H.1719—Alfin Brake Drums—are available. These save weight and improve heat dissipation. The drums are ribbed for cooling and strength.

****

SECTION F

AERO SCREENS

Aero Screens have been designed specially for fitting to the Austin-Healey. The screen incorporates a rubber seal at the lower edge, which prevents water running under the screen.

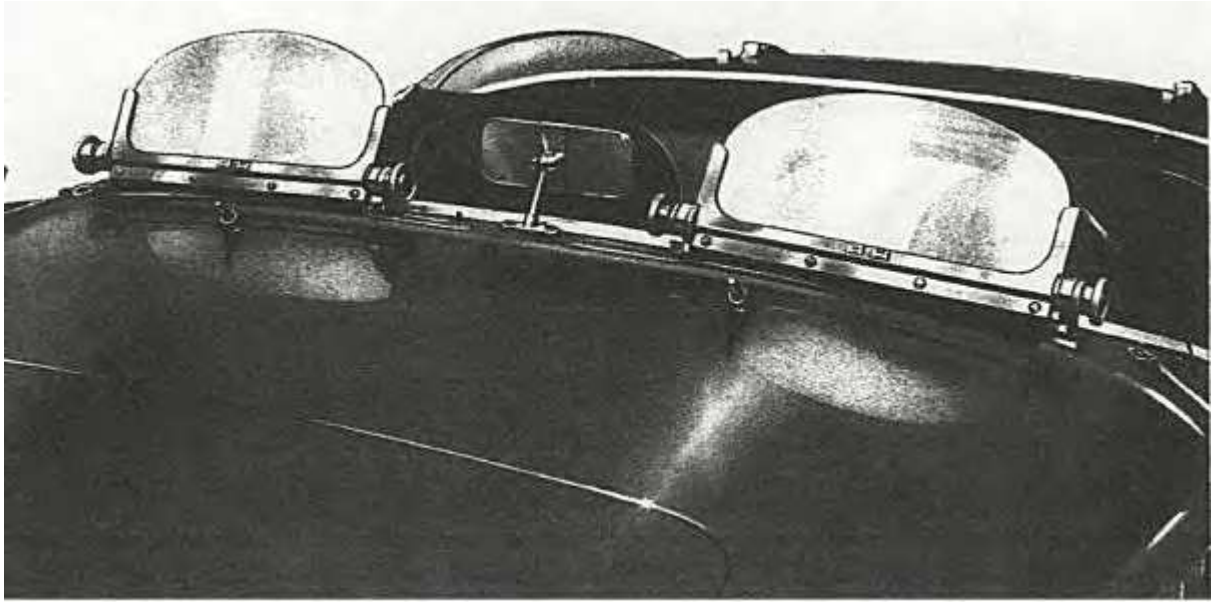

Austin
Part No.
7H.1713 .. Aero Screen Assembly…….2-off

The Aero Screens are fitted with approved laminated safety glass.

****

SECTION G

ELECTRICAL

The security of electrical wiring for competition purposes is very important.

It is advisable to install a second coil in position ready for a quick change over in the event of failure.

Always carry spare bulbs and fuses.

The importance of the correct contact breaker point setting of .015" cannot be overstressed.

****

SECTION H

GENERAL

Particular attention should be paid to all adjustments and tightness of nuts and bolts.

(1) Check and set toe-in correctly; this avoids undue tyre wear.

(2) Check engine, axle and gearbox for oil leaks and replace any faulty gaskets.

(3) Check the tightness of oil filter and bolts. For added security bolts may be drilled and wired.

(4) Grease the splined and cone surfaces of wheels and hub nuts before fitting.

(5) Clean the petrol filters in the pump and the carburetters and replace with the nuts tight.

(6) Tape the radiator hoses with friction tape.

(7) Do not attempt to race a new car. .Peak performance will not be obtained until approximately 3,000 miles have been covered.

(8) Make a point of changing all oils before a race. This ensures that any dirt is removed from the working parts and the lubricant is in the best possible condition.

(9) Spare wheels should be checked so that replacement tyres at the correct pressure are available.

(10) Always have supplies of water and the correct oil available.

SPARES

Certain races stipulate that all spares and tools are carried on the car. The carrying of spares on rallies and long distance road competitions is advisable. A series of spares has been developed which weigh little, but can be invaluable. They are as follows: —

(1) Coil of soft steel wire. Very useful for wiring on parts that come loose as the result of vibration or accident.

(2) Spare spark coil. Should be fitted in position for a quick change.

(3) Set of spark plugs correctly gapped and carefully packed for use.

(4) Spare fan belt.

(5) 4 — 50 amp. Fuses.
2 — Panel light bulbs
1 — Side or tail lamp bulb
2 — Headlamp bulbs

(6) 1 Cylinder head gasket.

(7) 1 Roll of friction tape.

(8) 1 Contact breaker set.

(9) 1 Chamois leather.

(10) 1 piece of rag.

You are then equipped to deal with a large number of minor troubles that could put you out of a race, but which are so easily put right.

TOOLS

(1) Hammer to remove wheel nuts.

(2) Lifting jack well greased for quick action.

(3) Pliers.

(4) Adjustable spanner.

(5) Spanners.

(6) Screw drivers.

SECTION P

LIST OF AVAILABLE EXTRA EQUIPMENT

Austin Part No.	*Description*
P.280	Le Mans Tune-up Kit.
7H.1713	Aero Screen Assembly.
7H.1714	Petrol Tank, 15 Gallons.
7H.1715	Petrol Tank Strap.
7H.1716	Petrol Tank, 25 Gallons.
7H.1717	Petrol Tank Strap.
7H.1719	Alfin Brake Drums.
1B.8929	Race Type Rear Springs (Negative Camber).
	(Standard Equipment from Chassis L.H.D. 152233 on R.H.D. 152420 on)
7H.1721	Race Type Anti-Roll Bar.
7H.1735	Close Ratio Overdrive Assembly (22%).
ALT-83	Waterproof Plug Covers.
7H.1747	Silencer (Race Type).
1B.8935	Front Shock Absorber
	(Standard Equipment from Chassis L.H.D. 153855 on R.H.D. 153857 on)
B3-365	Crown Wheel and Pinion (3.66 to 1).
7H.1751	Speedometer for use with B3-365.

MAKE YOUR BN1 WIPERS SELF PARK
(BN2 ONWARDS HAVE SELF PARKING WIPERS)

On a recent up north we struck foul weather with intermittent rain and after 20 years of trying to switch off the wipers when they came to the end of their stroke, I decided to make them self parking.
I had a Morris 1100 wiper motor and modified it to wipe 120deg instead of it's original 150deg., but it wouldn't fit into the space where the old one was mounted, the mounting studs were in an entirely different position and it's neck was over 1" longer, so a longer spiral rack (like the BN2 to BJ8 one) would be needed.
I did some thinking and modified the passenger side wiper wheel and wiper box cover. The wheel and shaft can be taken out by removing the wiper arm then the wiper box cover.
The wheel was drilled and tapped 10-32 unf, out near the rack teeth and a 1" length of 5/32" rod with a thread on it's end was Loctited in. The back plate was drilled and filed as shown below to allow the rod to move back and forth as the wipers worked. The wheel and shaft was replaced with the rod at its lowest position when the wipers were parked and the back plate replaced.
The plate holding the micro switch is 4"x 1 ½" aluminium bolted to the bracket on the body, for the LHD steering column support channel,

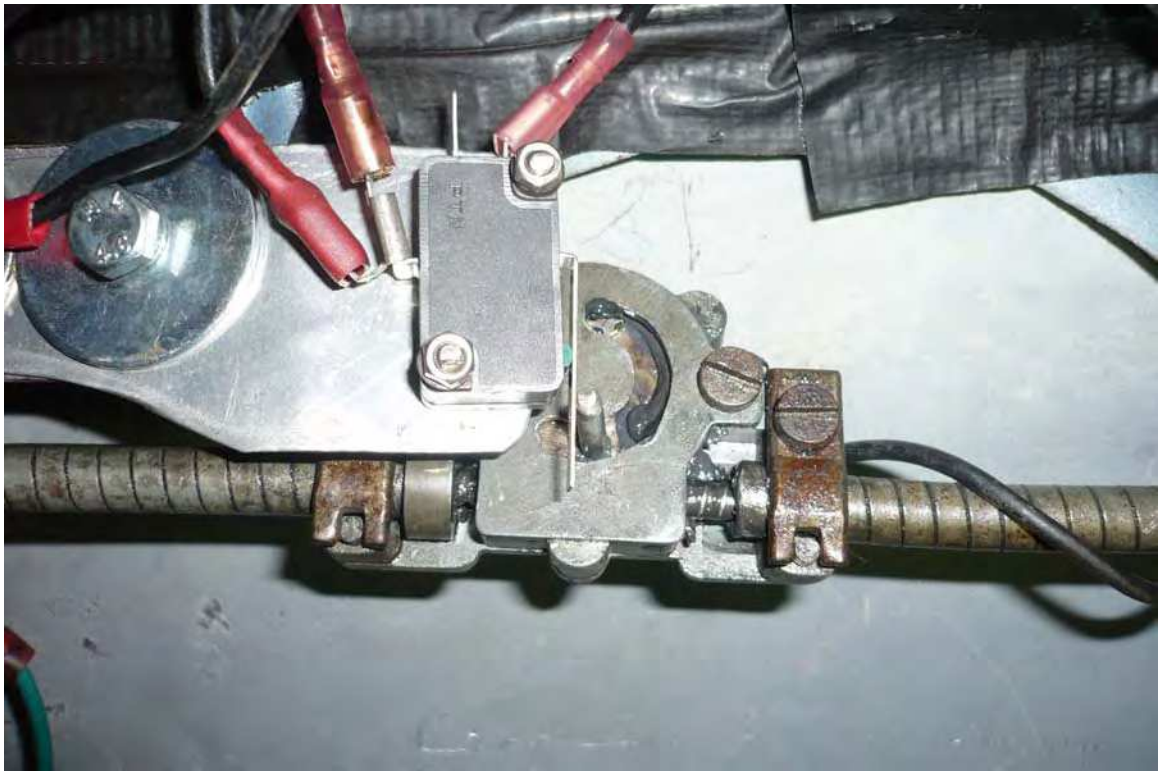

First turn off the battery switch or undo a battery terminal, then undo the red and black with green wires to the wiper switch and connect them together along with the lead to terminal 30 on the relay. Run a wire from one of the wiper switch terminals to earth and one from the other one to the micro switch in terminal. Disconnect the black earth wire from the wiper motor terminal and run a wire from the terminal to terminal 85 on the relay.
Adjust the micro switch to click off when the wipers are in the park position.
Reconnect the battery and give it a try.

BN1 WIRING FOR SELF PARKING WIPERS

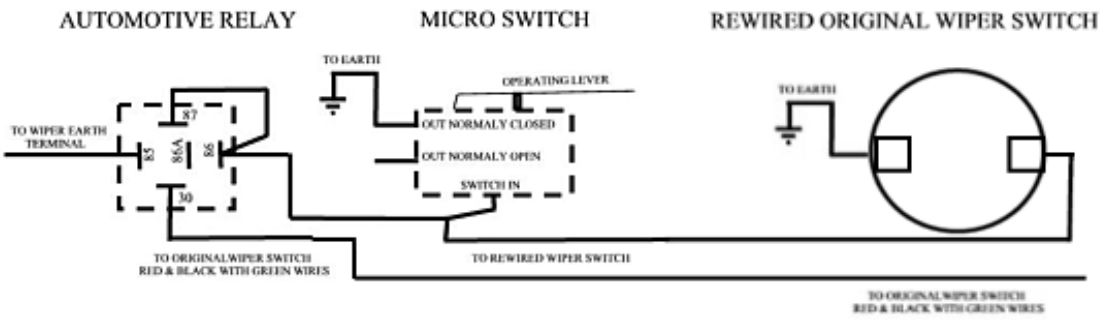

The micro switch is available from most Electronics Shops; I got mine from Volt Electronics http://shop.voltelectronics.com.au/spdt-micro-switch-with-lever.html for $7.20 posted.

Don Hardie
5/06/2009

P.S. This for RHD cars, for LHD it looks like you could fit it to the passenger side but with the bracket etc., mirror reversed as below.

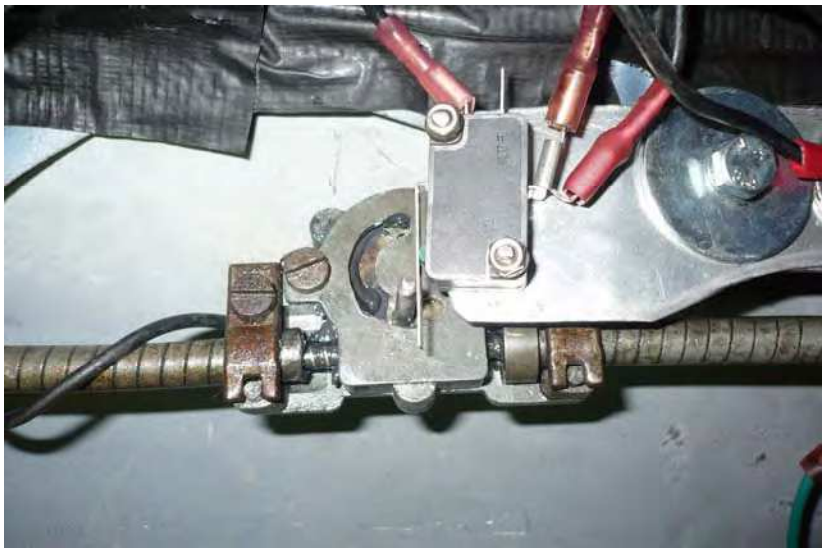

TECH TIPS

This article by Roger Moment appeared in the September 1982 issue of Healey Highlights, Pacific Centre. I found it quite helpful and hope others do as well. Gary Meyer.

SPEEDOMETER CABLE RIGHT ANGLE DRIVE REPAIR

The right angle drive connecting the overdrive (or transmission in cars without overdrive) to the speedometer cable can be fairly easily repaired. Considering the roughly $30 cost of a new one, I felt I had nothing to lose by trying when mine broke. For tools you will need a vise, hammer, good gripping pliers or vise grips, 1/8” and ¼” punches and a screwdriver.

Figure 1 shows the appearance of a healthy drive unit. The shaft mating with the overdrive is actually a short length of speedo cable. In my case it had sheared at point A. I found that by twisting the stub with my finger, the shaft and gears in the unit turned easily. Thus repair was merely a problem of installing anew piece of speedo cable. But replacement requires disassembly of the right angle drive unit.

Figure 2 shows a cross section view of the driving gears within the unit. By placing the housing over a recessed support, the end cap can be driven out by using the ¼” punch against the broken off cable end. Once the gear is free, the 1/8” punch is used to drive the cable out, as shown in **Figure 3**. Chances are that the inner bush will come out with the cable. If it doesn't, use the punch to drive it out too. In my case, I ended up with a short cable length as shown in **Figure 4.** Again the 1/8” punch was used to drive the cable free. The vise jaws can be used to support the gear and bush in these operations, but be careful not to squeeze the gear shaft or cable.

For a replacement cable, the end off a broken speedo cable will do fine. You could find one at a garage or speedo repair shop, probably for free. The piece should have about 2” of round section beyond the squared end. Place the squared end into the speedo drive on the overdrive. It should go in go in about ¾”. Next measure for length by placing the driving gear shaft alongside with it's shaft against the overdrive. Cut the cable with a hacksaw to allow about 1/8” recess within the gear end.

The only tricky part of the repair is insertion of the cable into the bush. Place the cable horizontally into the vise jaws to grip all it's length except for about 5/8” of the round end, which should protrude. To drive the bush onto this end, grip it with the pliers and while hammering on the free end, simultaneously apply a counter clockwise twist. This will tend to wrap the cable's outer wires tighter, thus reducing it's diameter. If you turn the other way, these wires will spread making the job impossible. Drive the bush on until the cable is within 1/16” of its open end.

The bush cable assembly should be checked for any kinks in the cable before inserting into the driving gear. Clean all parts in solvent and regrease before replacing the end cap. Remember the domed side of the thrust bearing goes inward against the gear. Tap the end cap, gently, using a punch or dowel and you're done.

Be sure to check for free operation by twisting the cable before attaching to the overdrive. That short cable that I repaired broke as the result of something causing the gear to resist turning, to avoid a repeat, the cause must be found.

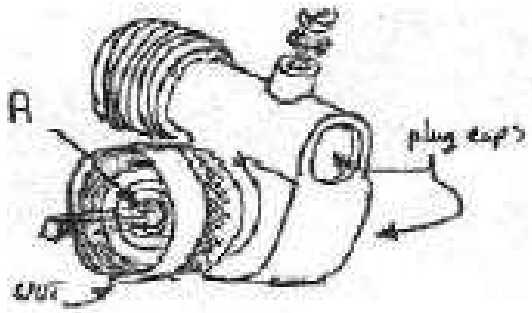

FIGURE 1
OUTSIDE VIEW

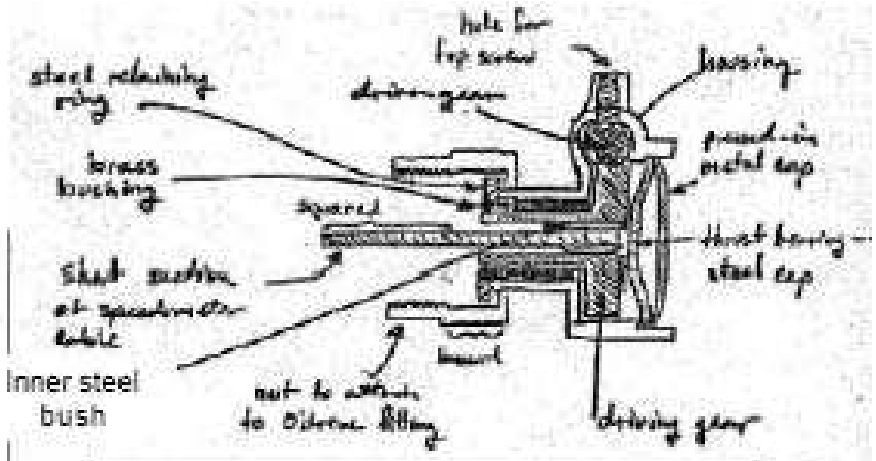

FIGURE 2
CROSSECTION OF DRIVING GEAR

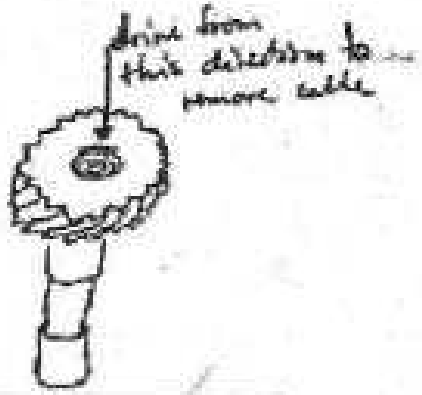

FIGURE 3
DRIVING GEAR

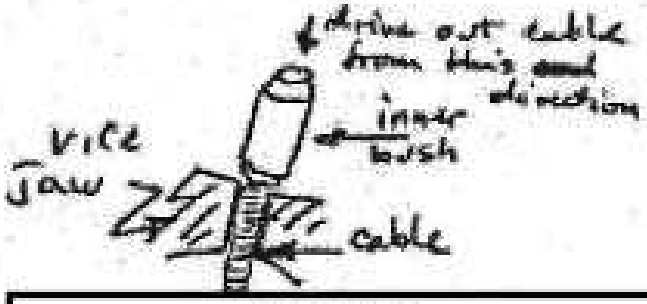

FIGURE 4
CABLE WITH PRESSED-ON BUSH

****

I did this repair on several Rover P6s (2000 & 3500), they had two right angle drives the same as the Healey's, one at the gearbox and another at the rear of the speedo and it is easy to do.

Don Hardie 17/10/08

GPS Speed Alert

GPS Speedometer with over-speed alert

Hummingbird Electronics' GPS Speed Alert provides drivers with an accurate, highly visible fast response digital speedometer and over-speed alert in a small, easy to mount unit.

The GPS Speed Alert requires no calibration and is only connected to the vehicle through connecting unit to power and ground.
I connected it to the twin cigarette lighter socket attached to the steering column brace with the lead supplied.
I mounted two magnets on a bolt in the vacant overdrive switch hole and the metal plate in the back of the unit attaches to them.

SEE PAGE 2

Update 25/09/2015

After installing a Heads Up Display on my Tin Top, I moved the Speed Alert to the shroud, secured with double sided tape, as shown below.

The steering wheel arm is slightly off centre, when traveling straight ahead, which makes the Speed Alert visible most of the time. You don't have to divert your eyes from the road as much as looking at the Speedo or the first position of the Speed Alert, almost as good as a Heads Up display.

GPS Speed Alert
with Integrated GPS

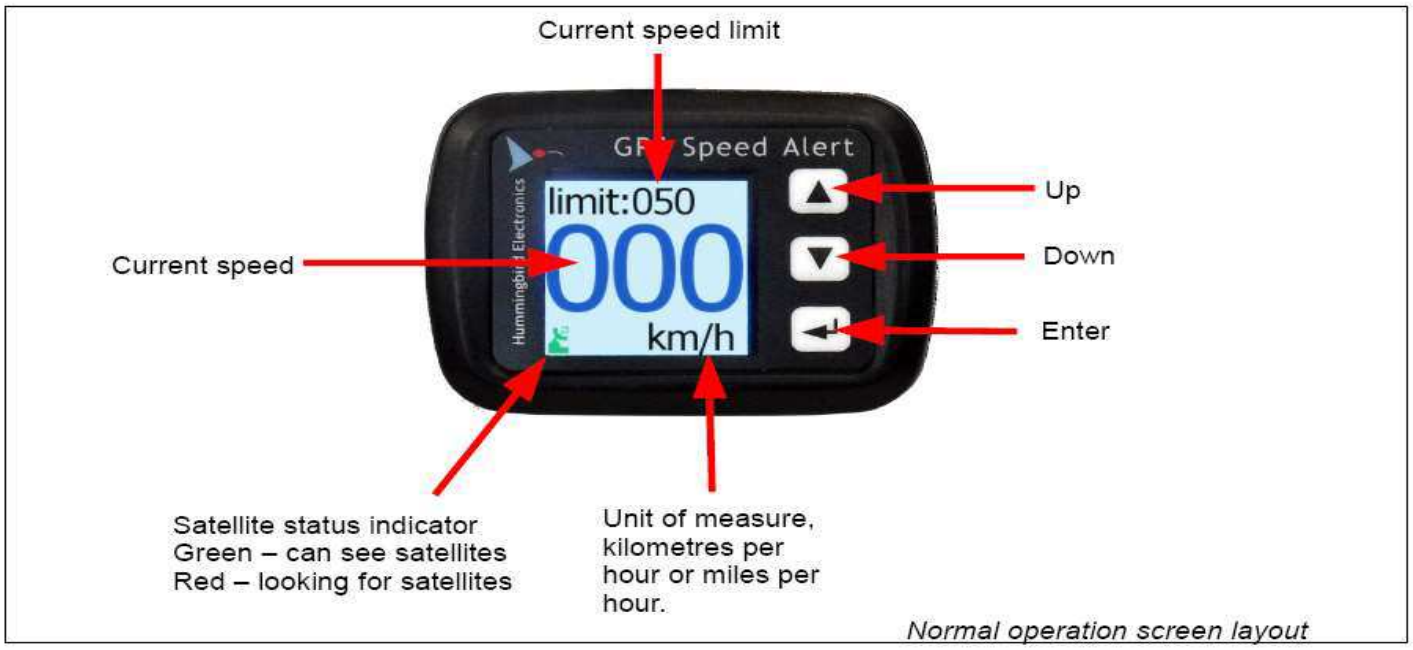

Normal operation screen layout

Normal Operation:

Up – increases the speed limit by 1 step Down – decreases the speed limit by 1 step Enter – Access the menu to change settings*

Main Menu

Up – move to the previous menu item Down – move to the next menu item Enter – Select the current menu item

Menu Items

Buzzer on/off – turn the warning buzzer on and off by pressing the Enter key.

Step size – change the speed limit step size (when pressing Up/Down in normal mode) between 1,5,10 by pressing the Enter key.

Background Colour – Change between White or Black display (only from software rev 4-3-2).

Unit – change between km/h and mi/h by pressing the menu key.

Password on/off – turn the password on and off by pressing the Enter key. Turning the password on will prevent the user from entering the menu or adjusting the speed limit. Exit – Select this item to return the main menu.

Bleeding brakes .....

doesn't have

to be hard.....

Internet URL: https://www.speedbleeder.com

E-mail address:
speedbleeder@earthlink.net

U.S. Pat. 4869292

U.S. Pat. 4989639

Frames best when viewed at 800 X 600 Resolution.

Installation of Speed Bleeder®

Once you get your Speed Bleeder®, it is very simple to install:

- Simply clean the area around the old bleeder screw so that no dirt or contaminants can get into the brake system.
- Remove the old bleeder screw and discard.
- Screw in the Speed Bleeder® into the wheel cylinder or caliper until it seats.

- Unscrew the Speed Bleeder® 1/4 to 1/2 turn.
- Here comes the magical part. Slowly pump the brake pedal approximately 4-5 times. (You do not have to close the bleeder screw between pumps.) A one way check valve lets the air and fluid out when the pedal is pressed and closes between pumps preventing new air from reentering the system between pumps.
- After bubble-free fluid comes out of the Speed Bleeder® screw, close the Speed Bleeder® until it seats.
- Proceed to the next wheel cylinder or caliper until all are bled.

That's all there is to bleeding brakes with the Speed Bleeder®.

When you first install the Speed Bleeder® you will note a *slight* resistance when you reach the thread sealant. This is normal. The thread sealant is conforming to the shape of the threads to provide a seal between the internal threads of the caliper or wheel cylinder and the external threads of the Speed Bleeder®. When the Speed Bleeder® bottoms out, it is closed. If it still leaks tighten it a little more. (no more than 1/8 turn) If you tighten it more you might break it off.

If you experience considerable resistance, more than usual, when installing the Speed Bleeder you might have cross threaded the Speed Bleeder. If you have done this you probably have damaged the threads on the Speed Bleeder and should not use the damaged Speed Bleeder.

******DO NOT OVER TIGHTEN******

On an aluminum caliper you could strip out the internal threads of the caliper and on a cast iron caliper or wheel cylinder you could strip off the threads on the Speed Bleeder® .

Speed Bleeders® are intentionally not case hardened. This makes it easy to remove if you break one off in the wheel cylinder or caliper. A case hardened bleeder screw is very hard if next to impossible to remove.

Slipping a piece of our silicone tubing onto the nipple of the Speed Bleeder® and placing the other end onto our Speed Bleeder Bag makes it easy to see when the bubble-free brake fluid appears and lets you know it is time to close the Speed Bleeder® . It also eliminates the usual mess associated with bleeding brakes.

****

When I removed the existing brake bleeders to measure them, I used a stick long enough to go from the seat and move the brake pedal enough to apply the brakes lightly and seal off the fluid reservoir from the system, so that when I removed the brake bleeder I only lost a small amount of fluid. I did the same when fitting the Speed bleeders.

Now I can bleed the brakes by myself!!!!

Don Hardie

****

Part Number	Thread Size	Overall Length in., (mm)
	Inch or SAE	
SB1428 #	1/4 X 28	1.00, (25.40)
SB51624 #	5/16 X 24	1.00,(25.40)
SB51624L #	5/16 X 24	1.18, (30.04)
SB3824 #	3/8 X 24	1.29, (32.78)
SB3824HD #	3/8 X 24	1.33, (34.03)
SB3824L	3/8 X 24	1.53, (38.88)
SB71620#	7/16 X 20	1.43, (36.35)
SB71624	7/16 x 24	1.17, (29.75)
SB71624L	7/16 x 24	1.54, (39.10)
	Metric	
SB6100 #	M6 X 1.0	1.13, (28.80)
SB7100S #	M7 X 1.0	1.19, (30.22)
SB7100 #	M7 X 1.0	1.38, (35.15)
SB8100 #	M8 X 1.0	1.28, (35.54)
SB8125#	M8 X 1.25	1.10, (27.99)
SB8125L #	M8 X 1.25	1.28, (32.54)
SB8125LL	M8 X 1.25	1.50, (38.09)
SB1010S #	M10 X 1.0	1.23, (31.35)
SB1010 #	M10 X 1.0	1.35, (34.44)
SB10125 #	M10 X 1.25	1.35, (32.44)
SB1015 #	M10 X 1.5	1.35, (32.44)

SPIN ON OIL FILTER

The spin on cartridge filter replaces the original one, is a more modern filter and easier to replace.

Filter kit

Filter adaptor attached to engine

REAL HEALEY NATTER

JUNE 1996

SU DAY AT MIDEL

The Technical Day at Midel Pty Ltd was very informative, with those who attended learning something, if it was not the intricacies of S.U. carbies and fuel pumps then it certainly was the service that Bill & Adam Bressington can supply. I came away with all the parts to rebuild a pair of Rover V8 HS-6s to grace my inlet manifold.

The C.V.V.& T.M.C. Swap Meet, now held at Annangrove, didn't appear to be as big as the Chatswood ones, maybe because it is now on the one level and there was plenty of light (unlike the dark bowels of the Chatswood multi storey car park). The scroungers were there in force, seen were Don Reid, Keith Drake, Ian Allan and Steve Copplin (with ever suffering family in tow).

DMH-000
(THE HARDIE'S 100-4)

P.S. One stall holder had Genuine Lucas Battery Switches which he said could be obtained through John Barnett.

THE

ELECTRIC FUEL PUMP

(TYPE "HP")

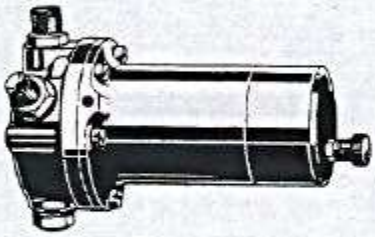

AUTHORISED DISTRIBUTOR :

TYPE "HP" ELECTRIC FUEL PUMP — Specification Nos. AUA.56, AUA.42, AUA.50 and AUA.54

Illus. No.	Part No.	Qty. off	Description
	Spec.		
	AUA.56	1	**Electric fuel pump complete (basic)**
	AUA.42	1	**Electric fuel pump complete (with condenser and air bottle)**
	AUA.50	1	**Electric fuel pump complete (with condenser)**
	AUA.54	1	**Electric fuel pump complete (with single contact, condenser and inlet valve spring)**
			BODY GROUP
1	AUA.4080	1	Body—aluminium.
2	AUA.4082	1	Joint washer.
3	AUA.4081	1	Plate—body
4	AUC.1422	1	Outlet union (not fitted to Spec. AUA.42)
5	AUA.1442	2	Washer—filter and outlet unions.
6	AUA.840	1	Spring clip—valve cage.
7	AUA.839	2	Valve disc.
8	AUA.1416	1	Valve cage.
9	AUA.508	1	Spring—inlet valve (used on Spec. AUA.54 only).
10	AUA.1479	1	Washer—valve cage.
11	AUA.887	1	Double-ended inlet union.
12	AUA.1405	1	Washer—inlet union.
13	AUA.1464	1	Filter.
14	AUA.1421	1	Filter plug.
15	AUA.1481	1	Adaptor union—air bottle } Used on Spec. AUA.42 only.
16	AUC.1833	1	Banjo } Used on Spec. AUA.42 only.
17	AUC.2141	2	Fibre washer } Used on Spec. AUA.42 only.
18	AUA.6038	1	Air bottle sub-assembly } Used on Spec. AUA.42 only.
			DIAPHRAGM GROUP
27	AUA.6010	1	Diaphragm sub-assembly.
28	AUA.1785	1	Spring armature.
29	AUA.1433	11	Roller.
			COIL GROUP
30	AUA.6003	1	Coil housing sub-assembly—12 volt, including:—
31	AUA.1455	1	Terminal tag—5 B.A.
32	AUA.1456	1	Terminal tag—2 B.A.
33	AUA.4083	6	Screw—2 B.A.—coil housing to body.
34	*AUA.4850	1	Earthing screw—2 B.A.
35	AUA.878	2	Terminal nut (Specs. AUA.42 and AUA.50).
		or	
		1	Terminal nut (Specs. AUA.54 and AUA.56).
36	AUA.1863	4	Spring washer—double coil—2 B.A. (Spec. AUA.56).
		or	
		3	Spring washer—double coil—2 B.A. (Specs. AUA.42, AUA.50, AUA.54).
			ROCKER AND PEDESTAL GROUP
37	AUA.1435	1	Spindle—contact breaker—inner and outer rocker.
38	AUA.6020	1	Rocker and blade sub-assembly—single contact (Spec. AUA.54 only) including:—
32	AUA.1456	1	Terminal tag—2 B.A.
39	AUA.6032	1	Spring blade—sub-assembly—single contact.
38A	AUA.6021	1	Rocker and blade sub-assembly—double contact, including:—
32	AUA.1456	1	Terminal tag—2 B.A.
39A	AUA.6036	1	Spring blade—double contact.
40	AUA.1468	1	Terminal screw—2 B.A.
41	AUA.6034	1	Pedestal sub-assembly.
42	AUA.1459	2	Pedestal screw—2 B.A.
43	AUA.868	1	Spring washer—5 B.A.
44	AUA.847	1	Screw—5 B.A.—spring blade.
45	AUA.1662	1	Lead washer.
46	AUA.1661	1	Terminal nut—2 B.A. recessed.
47	AUA.5060	1	Condenser } Not fitted to Spec. AUA.56.
48	AUA.5059	1	Spring clip—condenser } Not fitted to Spec. AUA.56.
49	AUA.5078	1	End cover—black } Not fitted to Spec. AUA.56.
		or	
	AUA.1466	1	End cover—black (Spec. AUA.56 only).
50	†AUA.869	1	Terminal knob (Specs. AUA.54 and AUA.56 only).
N.I.	AUA.505	1	Fibre washer terminal post (Spec. AUA.50 only).
N.I.	AUA.504	1	Rubber sleeve (Spec. AUA.50 only).

* Earlier pumps fitted with 1 earthing stud, AUA.4084, 1 nut, AUA.878, 1 spring washer, AUA.1863 and only 5 screws 2 B.A., AUA.4083.

† On Specs. AUA.42 and AUA.50, terminal nut AUA.878 is fitted.
Also 1 shakeproof washer, AUA.4643.

N.I. = Not Illustrated.

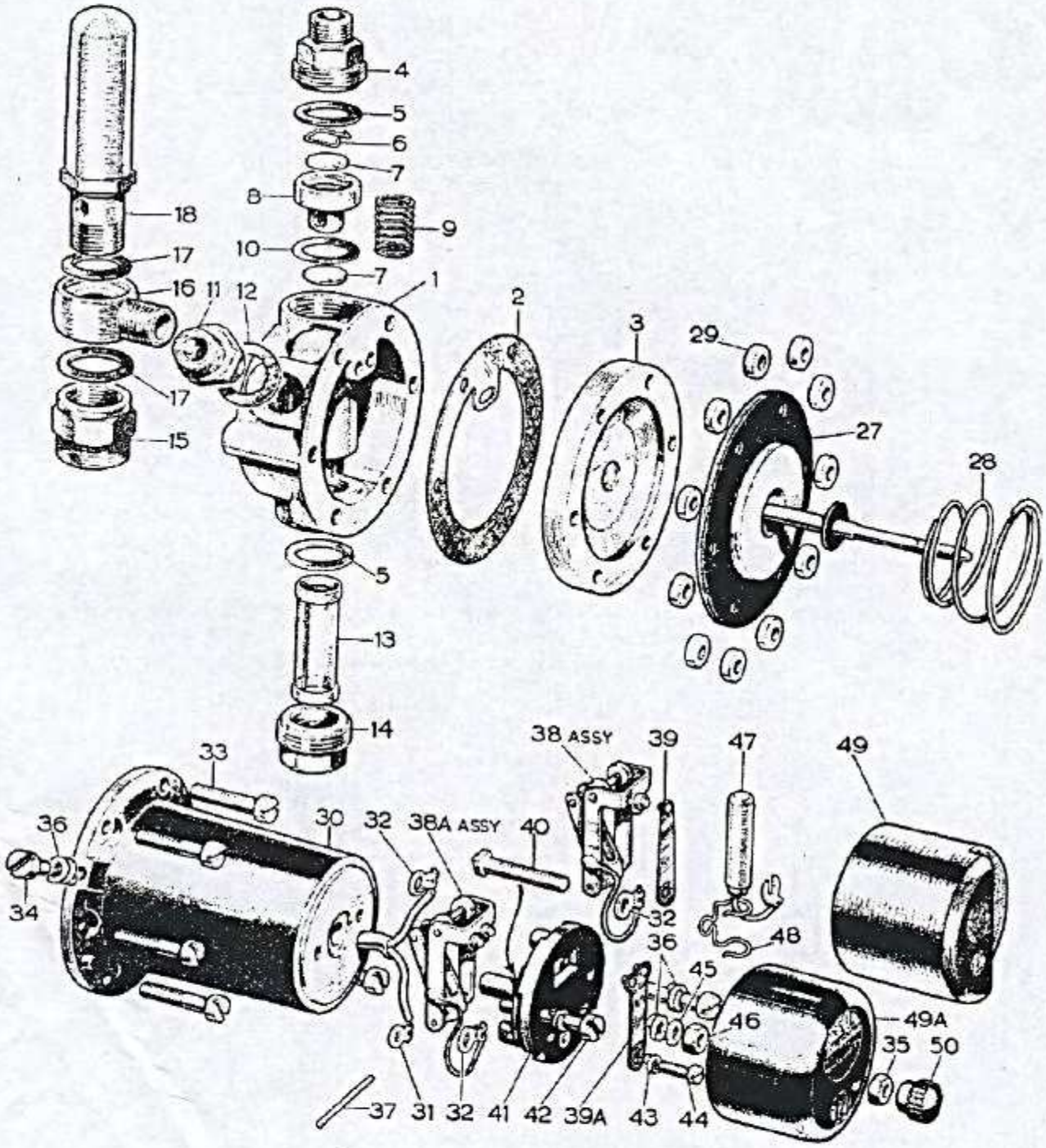
4
5
6
7
8
9
18
17
10
7
16
11
12
1
2
3
29
17
27
15
28
5
13
14
38 ASSY
39
47
49
33
36
30
32
38A ASSY
40
34
32
48
36
45
46
49A
35
50
37
31
32
41
42
39A
43
44

INTERNET DOWNLOAD

myaustinhealey.com - the 'black & white car' site
Austin Healey Technical articles & tips

These technical articles are provided to assist other Austin Healey enthusiasts in getting more out of their Healey in terms of competition performance. These articles are Copyright© Chris Dimmock 1999 - 2001. Many have been previously published in various forms in the AHOC NSW club magazine 'Flat Chat' or on the healeys@autox.team.net mailing list.
Disclaimer: I can take no responsibility for what you do to your car in the privacy of your own garage. There is no guarantee that the issues discussed here will be suitable for you, your car, or the purpose for which you use your car. I can take no responsibility for anything you do to your car - it is your car - you can do what you like - but don't blame me. This information is based on what I have done, or researched - but it is not a full step by step workshop manual guide - so if you don't understand the implications or processes - then don't attempt it. E & OE. No animals were harmed during the writing of these articles. I trust that covers all the required disclaimers.....
If you want to reproduce any of these in a Healey Club mag - please email me

Some observations on Healey Sway bar fitment

For those of you who have fitted a larger e.g. 7/8 inch diameter front sway bar - and still have their front bumper bar fitted to the car - here's something you may care to check.

On my BJ8, I noticed there was very little clearance between the bottom of the bumper bar bracket, and the top edge of the sway bar arms. The shiny marks on the bottom edge of the bumper bracket - and corresponding marks on the sway bar at the 'corners' - confirmed my suspicion - the 'arms' of the larger diameter bar were hitting the bumper bar bracket. This is a bad thing. If the swaybar arms hit/ bind on the bumper bracket, they will limit the suspension movement causing understeer.

However, the situation is easily remedied. Mark the width of the swaybar on the bumperbar bracket - and the location of the two (per side) bumperbar location bolts to the chassis (which helps when you go to refit the bumper bar to the car - in the same location - later!). Remove the front bumperbar with its brackets, and, using a large semicircular file (or angle grinder), file/ grind the offending area of the bumperbar bracket, in a nice 'scallop', so it clears the sway bar 'arms'. You need to allow about an extra .25 of an inch (probably more if you have standard springs) either side (especially to the rear) of the rollbar diameter, to allow for the movement of the bar arms. The depth of the scallop you file will (depending on how stiff your front springs are) have to be at least .25in to .4in deep directly above the centre of the rollbar - possibly more if you have original 'soft' front springs.

If you are driving close to the limit when the suspension becomes 'solid' - i.e. when the swaybar arms bind on the bumper bar bracket - your Healey will understeer badly. So - its worth checking - especially if you have a heavier front sway bar fitted.

Oils ain't oils....

So which type of oil should you use in a Healey overdrive gearbox? I spent a hell of a lot of time quite a while back trying to research this quandary.

Why is this such an issue? Primarily because the literature on the subject is confusing and contradictory. Here are the basic issues I uncovered. It appears the Healey gearbox/ overdrive requires a lubricant which satisfies seven criteria:
1. Overdrives are operated hydraulically - ie pressure is what makes the overdrive operate - so the oil has to also act as a hydraulic fluid.
2. The Overdrive has a wet clutch - ie there is a clutch which spends its life inmmersed in oil (like motorcycles)
3. Syncromesh operates on the gears using friction - ie if you reduce the friction, (as in use a 'friction modified oil') - then the syncros won't operate correctly
4. Temperature is also an issue - typically Non synthetic (i.e. mineral based) engine oil is thinner at lower temperatures than gear oil (not such an issue with synthetic engine oil)
5. Pre BJ8 gearboxes have brass rather than steel syncros - and 'older' EP mineral gearoils apparently have additives which attack the brass - (hence I believe the 'traditional' factory statement about using engine oil rather than gearoil)
6. The oil has to be capable of lubricating the gearbox - i.e. provide 'shear' protection in an environment which is like a box full of eggbeaters i.e. gearboxes aerate oil by their design. And - refer to point 1 above - no hydraulic system can operate successfully with aerated lubricant
7. Gearboxes don't have a filter like car engines - so having an engine oil which is designed to 'carry around' the impurities in suspension (by addition of detergents) - so that they can be removed by the filter - probably isn't a good idea in a gearbox - better to let any imputities settle on the bottom...

I think the 'gear oil versus engine oil' issue is a bit of a red herring in 2001. The 1950's - 60's BMC 'gearbox oil strategy" - I believe - was based on what was "practical & commercial & available" - rather than purely technical issues.... and it doesn't take into account the technological advancements made over the past 40 years - eg Synthetic oils. Would anyone seriously argue that their car handled better on the original fitment crossply tyres than on say Yokohama A008RS assymetric directional radials today?

Original BMC literature says said the Healey gearbox & overdrive should use a MINERAL engine oil. But the exact same overdrive (which is fitted on the back of the gearbox - and uses the same oil as the gearbox) on a big Healey is also fitted to a Triumph - and guess what? Triumph's literature all says only use a gear oil...aaaaaarrgghhh

Whats the answer? I asked everyone. You name a Healey racer or Australian / English Healey specialist - and I have either phoned or emailed them. I even emailed the manufacturer of the Healey overdrive to ask them why Austin Healey & Triumph gave contrary advice on oil for their product. And guess what? The correct answer is... that there is no correct magic single answer.

But - the best advice I can give from my research, is:

1. If you want to use a mineral based oil - Most experts agreed that Brass syncro gearboxes (eg BN1 etc) should probably use engine oil. This is because SOME MINERAL gear oils have additives which can corrode some brass syncros - so to be safe - always use an engine oil if you have brass syncros or use a SYNTHETIC gearbox oil.

2. However, if you do use an engine oil - all experts agreed that you should NEVER use a 'friction modified" engine oil. Because a syncro cone relies on friction - i.e. a syncros whole purpose is to 'slow' the gear, in order for the gear to be easily selected - i.e. it relies on friction to operate... . If the oil is too slippery (ie friction modified) - then guess what - the syncro won't work - new oil and real slow graunchy gearchanges (do you like that word - I do - graunchy) !! That is the major reason many people use eg Penrite HPR (30 or 40) - a mineral engine oil which doesn't have friction modifiers - in their gearboxes.

3. It was unanimous that lubricants have come a long way in the past 40 years. Just because the factory used a particular tyre 40 years ago - it doesn't mean they would use the same tyres again today. My point - oils aren't the same today as they were in the 1950's. Synthetic oils were not in the mass market back then.

4. Engine oil tends to aerate more than gear oil - and tend to hold the bits of metal etc. in suspension (the properties of engine oil are designed to hold in suspension the by products of combustion - and remove them via a filter) Gear oils are designed for a Gear box which doesn't have a filter (note that your overdrive has a 'strainer' - not a filter)

Much of this research pointed towards a synthetic gear oil as the answer.

My advice - read the stuff at Redline Oil website and make up your own mind, based on your own use of the car. Personally - in my fully rebuilt, using 95% brand new parts (all new gears, all new shafts, all new bearings, all new seals, all new syncros - only used the 'original' selector forks & 3/4th syncroniser & casing) gearbox in my Healey 3000 - and a fully rebuilt overdrive - the transformation achieved by switching to Redline MT90 gear oil was amazing - and that was after I tried 4 different brands of non synthetic engine oil . Redline is not cheap compared to Penrite HPR 30 (which I was using just prior to the change to Redline) - but believe me - either was my gearbox/ overdrive..... I've been running Redline MT90 in my gearbox/overdrive for over 2 years now - and Redline 75W90 in the diff (either a Detroit locker 4.1:1 - or a Quaiffe 3.9:1 - depends where I am) and have quicker syncro, no selection issues, and the Redline oil is coloured for temperature monitoring - so you can actually tell by the colour of the oil (on the dipstick) how hot your oil is getting.

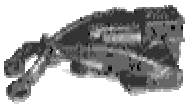

Armstrong shock arms - a *mostly*

ficticious story....

Once upon a time, a long time ago, near the mythical village of Birmingham, there were 2 identical twin brothers - separated at birth - who were destined to shape the lives of many, many thousands of future British car owners.

One of these brothers was born "visually challenged" - and was called "Lucas". Lucas became quite bitter, and dedicated himself to ensuring that everyone else should have some insight to his world of darkness. The other brother - who exhibited large amounts of upper body strength - was known as "Armstrong".

The story of Lucas is well documented (mostly in Braille). This is part of the story of Armstrong - the younger, and stronger, brother - who went on to pioneer shock absorber damping to generations of British vehicles.

Armstrong - although credited with huge amounts of upper body strength - had little or no stamina (due, I think, to a genetic design defect). He was able to resist and contain huge forces - but generally only for a short period of time. Left under physical stress for any length of time, he would, without warning, spew copious amounts of a substance resembling light oil from his armpits. It was this socially unacceptable personal behavior which I believe prevented him from attaining international acceptance in the motoring industry:- this behavior remains a repeatable mystery to this day by all his siblings & descendants. This weakness - not unlike the fabled Achilles and his heel - is know in medical circles as "Armstrong armpit".

Sprite owners front shocks appear to be descendant from "Rear Admiral Armstrong"- known as "Lefty" to his mates - a distant relative, who, unfortunately lost an arm in a horrific naval accident. Although physically different in appearance, these single arm front shock absorbers also exhibit "Armstrong armpit". It should be noted that all big and little Healey rear shock absorbers are descendants of "Lefty".

As we move forward to the late 1990's it has probably become evident to most Austin Healey owners that the Armstrong's have left many descendants - often identical in external appearance and features - except for slight differences in their internal valves, and arms (quantity, as noted above, and length/ shape) - but all identical in their affliction with "Armstrong armpit".

I am not aware of a permanent cure for "Armstrong armpit" - other than rebuilding by a competent expert - or replacement with rare NOS items.

The Armstrong family tree provides some benefits to Healey owners, and it is worth looking out for some of Armstrong's family, siblings, descendants and close relatives. For example, I have several sets of old front shocks, which although they look like a Big Healey front shock (some stamped 0008, some stamped 6945 - underneath the shocker in the machined recess - and came from Wolsley sedans), have arms 12mm, and 8mm (respectively) shorter than a Big Healey front shock - and this effectively moves a Healey's camber from the (standard) 1 degree positive camber to 1- 2 degrees of negative camber, depending on which shock arms you use. Both my Healeys had these (shorter arm front shocks) fitted to them. Definitely safer than bending arms.... You may also need to fit shorter (or adjustable) trackrods to your car if you alter the camber by more than 1 degree.

If you want to alter your camber - keep an eye out for some of these shocks....

Front Suspension, camber and tyres

What do you use your car for? If you just drive it around on the street - then I can't help you too much past this point. Most big Healeys have 1 degree positive camber as standard, and about 1mm toe in - so the outer edge must be the edge that wears first in straight line driving (i.e. - lets ignore the dynamics of cornering for a minute). Negative camber and toe out will wear the inner edge in straight line driving.

If you want front negative camber - to make the front of the car 'bite' better, and grip harder - this article may help - but it will move tyre wear from the outside edge to the inside edge of your tyres if you drive around on the street.

As a tyre corners hard, the outside tyre rolls over into a positive camber situation. As you turn the wheel - the caster applies some negative camber. When you start playing with camber - your final goal is to have the loaded tyre as 'vertical' as you can get it - to get more rubber on the road under hard cornering. On a Healey, with Yokohama A008 tyres - you actually need about 8 degrees total negative camber at 20 degrees turn in to achieve a vertical, fully loaded tyre. This total required negative camber is effectively caster plus static camber. Most standard Healeys have 1 degree positive camber, and somewhere between 0 degrees and 3 degrees of negative caster..... so getting this much neg camber is a bit of a task - and most never achieve anywhere near it...

If you want to change your camber to negative - there are four methods I am aware of:

1. You can bend the front shock arms, effectively shortening them - but I wouldn't ever recommend this - no one seems to know what the arms are actually made of - or how they are made (cast? forged?) - and the metalurgy could be a bit risky. I know many guys who have done this - I won't.

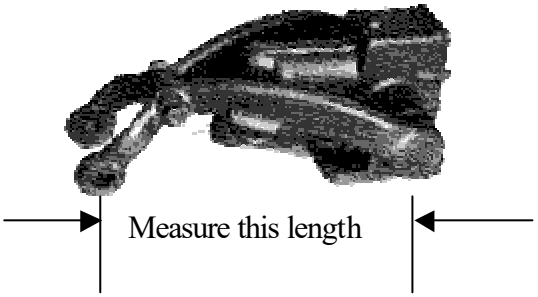

2. The better way is to fit the shorter front shock arms off other british cars - Wolesley sedans are the 'best' donors I've found. If you measure the length of your shock arms, centre to centre, with the shock arms installed on the shock, and you'll find that healey ones are 'about' 216 - 218mm long - try to measure them, and you'll see why I say 'about'.... You can get shock arms off other British sedans which are around 208mm, down to about 200mm long, trunion bolt center to shock arm pivot center. About 4.5mm = 1 degree of camber - so if you have a standard Healey setup (1 degree positive camber) - and you go to 200mm Wolseley arms - you get nearly 3 degrees NEGATIVE camber. But this modification (and most modifications which change camber by 2 degrees or more) require a few other changes - like making your fixed length steering arms adjustable, so you can shorten them to match the reduced shock arm length. You can't adjust the huge amount of toe out these shorter shock arms give by just shortening the centre fixed steering rod - you will run out of adjustment - and the steering arm and idler arm - which must always piont forwards - will splay out at up to a 45degree angle. You'll need to align the idler arm and steering arm so they are pointing straight ahead - then shorten (and make adjustable) the fixed length side steering arms. If you aren't capable of doing this yourself - do some more research - and get a qualified suspension expert to look at what you are trying to achieve.

3. Use 'camber bushes' - offset bushes on the top trunion link of the king pin. Typically - these give around 1 degree of adjustment.

4. Another option if you are starting with a bare chassis is to move your front shock locating plates 'inwards' - same scale of distances as in 2. above. If you do this - then also move them "back" - and get some more caster while you are at it..... Healeys don't have enough caster to start with - and more caster = less negative static camber is required. But do your maths before you try this - and seek the serrvices of a professional welder or body aligner!! - and often your wishbone locating mounts on the chassis rail will also need to be altered - so that everything lines up when you are finished

Remember - more caster = heavier steering - but better cornering grip.

As always - measure accurately - know what you are trying to achieve, and what you want your car for. Everything is a compromise...

Fuel delivery pressure issues

Both SU's and Webers are very prone to leaking if your delivery pressure (totally different issue to volume) is excessive - irrespective of how good/new the float valve is. Most 'modern' type non SU fuel pumps operate at too high a pressure.

Why is this important? Because too much pressure can push the valve off its seat and cause a excessively rich air/fuel mixture - or worse - flooding. Too little pressure (or volume) - air/fuel mix is too lean.

If you don't have the equipment yourself - then most workshops that have a dyno setup, would be capable of measuring the:

1. Fuel delivery pressure:
(basically disconnect the fuel line from the carbs, connect a low pressure guage (ie something that accurately reads 0 -10lb) securely to the line, start the pump, and look at the guage. Delivery pressure for either SU's or Webers should be in the 3.5 preferred - 4 max lbs per square inch range - unless you have made major mods to the carbs themselves (eg a large ball bearing inside a weber instead of a std valve)

2. Fuel delivery volume:
(basically disconnect the fuel line from the carbs, start the pump, and use a stop watch to ascertain how much fuel is delivered into a measured container over a measured amount of time). Most modern pumps deliver enough fuel. Your fuel volume requirement is obviously based on the state of tune of your engine; and how you drive it.

If the volume is ok - but the pressure is too high - then you have 2 options - you can get a lower pressure pump - or fit a regulator. If you fit a regulator - my suggestion is the old fashioned Malpassi 'filter king' combined fuel filter & pressure regulator. They were fitted to italian high performance cars - like Masseratis - and are very 'period' in appearance. They often come up on ebay around $US50. Try searching for 'filter king' on Ebay. Most 'speed shops' sell just plain modern regulators. The 'flat' type regulators - usually annodised red or blue with a dial on top - seem to fail after about 12 months - from my research.

Once you have the regulator - fit it near the carbs - then back to the dyno man with the pressure guage - and adjust it to deliver 3.5lbs per square inch pressure - then recheck the delivery volume. The dyno man should be able to tell you what volume you need for your engine - which obviously depend on its state of tune.

The Malpassi regulator/filter is sort of cylindrical, alloy on top, with a glass filter bowl, and removeable paper filter and looks period.

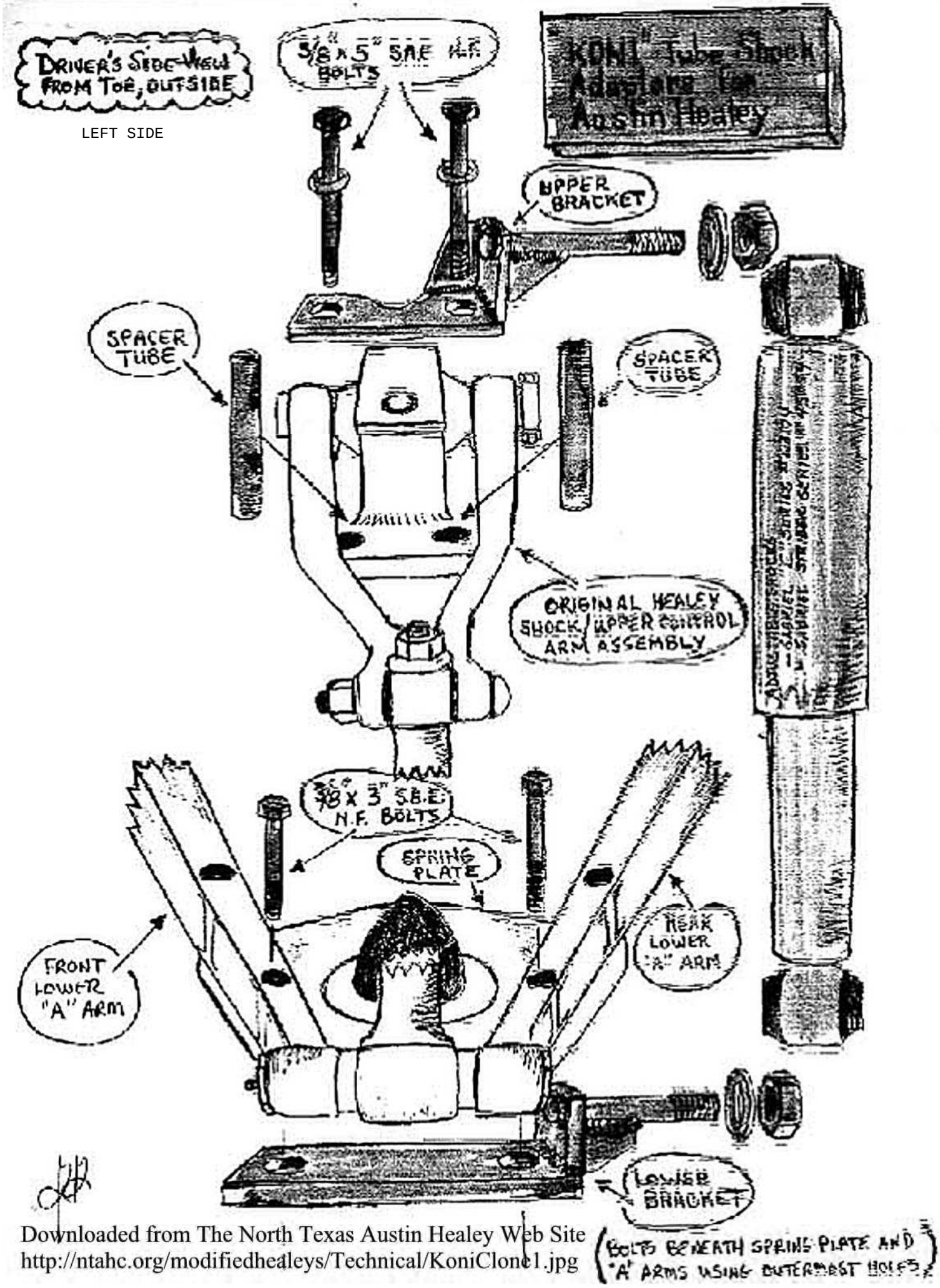

Note : - It would be a good idea to remove the valves from the original shock renew the shaft seals and refill with motorbike fork oil 20.

FRONT WHEEL BEARING ADJUSTMENT

Start with putting the new outer cups for the inner and outer bearings in the freezer to make them easier to install. Install the races.
Put 90 weight oil on your inner bearing cone and offer it up to the spindle. The oil will provide protection from damages due to bearing running dry but at the same time, not give you a false reading when trying to shim the bearings.
Next goes the bearing spacer, then shims, starting with the thickest one .030, then .010, .005, 003 (one of each). Offer up the front hub, without the seal. Again, bathe the outer bearing cone in oil. Line up the tab of the washer with the grove in the spindle and tighten the castle nut, so everything lines up.
If it drags when you tighten the castle nut, then you need to add shims. If it is too loose, you need to remove shims. When it is correct, retighten to the correct specs. At this point, the hub should be turning freely, with no end float and no preload.
Once you are satisfied that you have the bearings set up correctly, then remove everything. Make sure you keep track of the shims! Now pack the wheel bearings with wheel bearing grease and install your front seal and reassemble.

Fuel Economy Conversion Table

MPG	Miles/Litre	KiloMetres/L	L/100 Klm
10	2.2	3.54	28.25
11	2.4	3.89	25.69
12	2.6	4.25	23.55
13	2.9	4.6	21.74
14	3.1	4.95	20.19
15	3.3	5.31	18.84
16	3.5	5.66	17.67
MPG	Miles/Litre	KiloMetres/L	L/100 Klm
17	3.7	6.02	16.62
18	3.9	6.37	15.7
19	4.2	6.72	14.87
20	4.4	7.08	14.13
21	4.6	7.43	13.46
22	4.9	7.79	12.85
23	5.1	8.14	12.29
MPG	Miles/Litre	KiloMetres/L	L/100 Klm
24	5.3	8.49	11.78
25	5.5	8.85	11.3
26	5.7	9.2	10.87
27	5.9	9.55	10.47
28	6.2	9.91	10.09
29	6.4	10.26	9.75
MPG	Miles/Litre	KiloMetres/L	L/100 Klm
30	6.6	10.62	9.42
31	6.8	10.97	9.12
32	7.1	11.32	8.83
33	7.3	11.68	8.56
34	7.5	12.03	8.32
35	7.7	12.39	8.08
36	7.9	12.74	7.85
MPG	Miles/Litre	KiloMetres/L	L/100 Klm
37	8.1	13.09	7.64

38	8.4	13.45	7.44
39	8.6	13.8	7.24
40	8.8	14.15	7.07
41	9	14.51	6.89
42	9.3	14.86	6.73
43	9.5	15.22	6.57
44	9.7	15.57	6.42
45	9.9	15.92	6.28

[home page] [tech info] [top of page]

Temperature Gauge Calibration, by Frank Clarici ©

(Frank is a prominent Sprite owner in the USA)

Temperature gauge not reading properly on your Sprite? Fix it yourself in 20 minutes. Items needed: 5/8" wrench, small pot, propane torch.

- Remove the sending unit from the radiator or head depending on which model Sprite you have.
- Fill a small pot with water and bring to a rapid boil using a propane torch be careful to keep the flame away from any gas or body parts.
- Insert the sending unit bulb into the boiling water. Your gauge should read 212 or be on the start of the "H" area of the later models.
- If it reads otherwise, remove the gauge from the dash, and remove the chrome bezel
- Twist the rim until the slots line up, remove the glass lens (it needed cleaning anyway), gently pull the temp needle off its stem, and replace it at 212 degrees.
- Reassemble the gauge, replace the sending unit, top up coolant, wash out the wife's pot and return it to her kitchen.

* * *

Lifted from Healeys West - November 2002

This should also apply to 100 gauges.

100 TECHNICAL
TEMPERATURE GAUGE REPAIR

A FACTORY replacement thermometer gauge for my car would have cost £1- 17s. 6d, and while this was no fortune it irked me to spend this when the only apparent trouble with the existing unit was that the capillary tube had fractured at the end of expansion bulb. So I decided to repair it myself.

First job was to remove the instrument, which comprises the expansion bulb, capillary tube and

The dial from the car, as no attention can otherwise be given with the unit in position. Not knowing how long the repair was likely to take and wanting to use the car in the meantime, I obtained a plug to replace the adapter in the thermostat housing before starting. In my case a sump plug for my car was a perfect replacement.

Sufficient water was drained from the cooling system to enable the expansion bulb and adapter to be removed without loss of any precious antifreeze. The plug screwed in and the coolant replaced. After this, the coils and bends in the capillary tube were straightened and all clips holding the tubing removed so that no difficulty would be experienced when drawing the tubing through the hole in the bulkhead.

The dial in my car was contained in a two-in-one instrument assembly in the dashboard. So removal entailed disconnecting the oil pressure pipe and withdrawing the gauge and capillary tube through the dash, an adapter was then fitted to the end of the oil line to seal it off.

With the gauge out it was a simple to remove the chrome rim and glass and remove the temperature unit from the case.

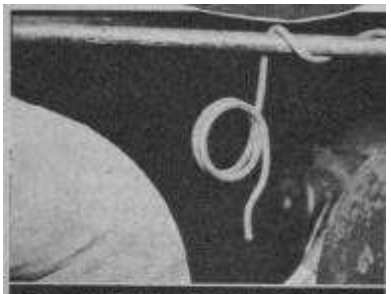

The reason for the gauge not going — the pipe has sheared right off

The correct way of removing the expansion bulb by using two spanners

When the expansion bulb is taken out it should have a copper washer

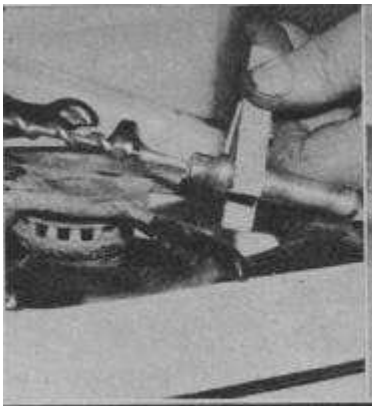

Here is the broken end of the pipe being gently eased out of bulb. Heat has to be used carefully or the bulb may be spoilt

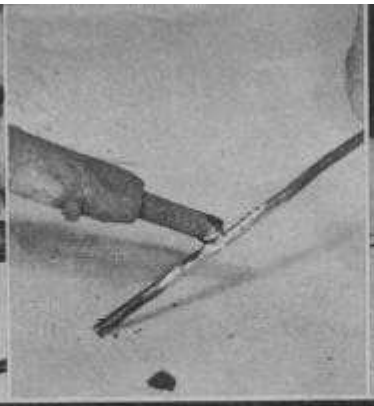

Before replacing the tube in the bulb it was tinned. This has to be done carefully to avoid the solder blocking the tube

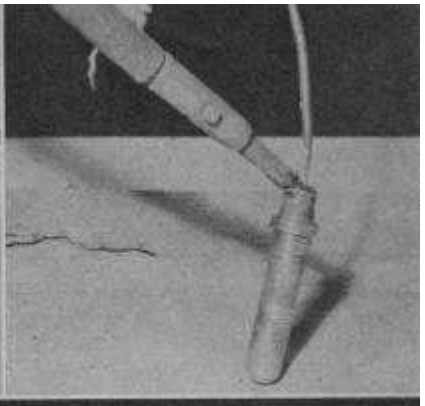

When resoldering the pipe into the bulb, make sure about ¼ in. of it enters the bulb. Check the joint by tugging the pipe

The next operation was to remove the broken end of the capillary tube from the expansion bulb and this was achieved over a gas ring, using the screw point of an old carpenters auger bit to grip the inside of the tube and withdraw it as the solder melted. I found that the expansion bulb was made in two parts soldered together at the shoulder and care had to be taken to localise the heat as much as possible in order not to cause disconnection at this point.

In my case the use of a naked flame at this juncture was of no consequence, as there was no trace of ether, the liquid that expands to operate the needle, as it was some years since the unit was broken. If any doubt could exist regarding this, however, I would suggest an electric soldering iron be used, thereby obviating any risk of an accident, as ether is flammable and explosive as a gas.

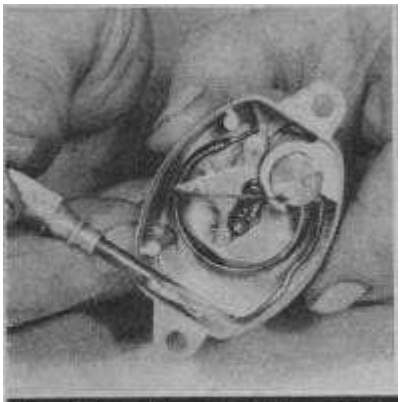

The filler tube can be easily seen after the face has been removed. Use a small screwdriver to ease the tube from the case

The end of the capillary tube was then straightened, cleaned and tinned approximately ¾" from the end, This ensured that there would be no risk of solder contaminating the end of tube when re-engaging with the bulb, which could result in the tube becoming blocked. It was then a straightforward soldering job to join bulb to the tube again. **Do not forget to slip the union nut on to tubing first.**

Refilling has to be undertaken from the dial end of the instrument. Tucked away around the outside of the gauge unit is a short length of tubing which is used for filling, so I gently prised it out until it was possible to saw of its soldered end with a midget hacksaw. I did not attempt to unsolder the end, as there seemed some risk that the solder might run down inside the tube and cause a blockage.

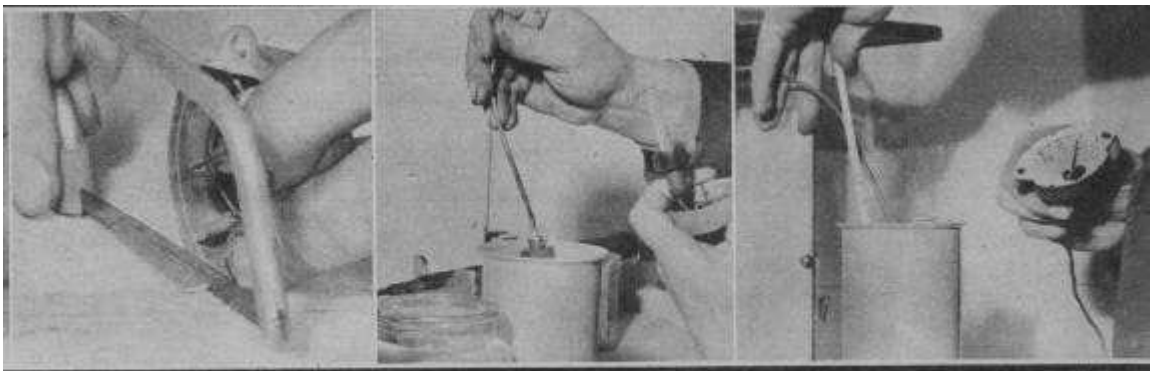

The filler tube has to be opened up and the only way of doing this is to cut the end off with a small hacksaw used lightly

Filling the unit is done with a medical dropper fixed on to the tube. Note the hot and cold water containers ready for use

Last stage now with the repaired gauge being checked against a thermometer known to be in order and registering accurately

COMMERCIAL ETHER

Two shillings worth of commercial ether had previously been purchased from the local chemist which, as it turned out was a sufficient quantity to have filled a dozen gauges.

But how to use?

The eventual solution was to use a dropper from a nose inhalant bottle, which was modified by making a small hole the rubber bulb into which the filler tube could be pushed. The hole was small enough to cause the filler tube to be gripped and thereby prevent leakage.

With a little care, it was possible to fill the dropper with ether in the normal way, and after wedging the dial to prevent it from slipping with the filler tube vertical, the dropper was inverted and placed in position on the filler pipe.

A jar of cold water and a tin of hot water were then used to successively heat and cool the expansion bulb. This caused bubbles of air to be given off in the ether each time heat was applied, and for ether to he drawn in when the bulb was cooled. After a while it seemed that the instrument was full, so it was decided to re-solder the filler tube –after pinching it flat with pliers- and check the gauge for accuracy.

A tin of cold water was then brought to the boil with the expansion bulb and a thermometer immersed in it, and a comparison was taken of both on gauges through the range of 30 to 100 deg. C. I found that my gauge was dead accurate for all practical purposes.

From then on it merely a question of putting the whole thing back together and refitting it to the car, and this was exactly the reverse procedure to dismantling.

There is little doubt the weak link in these instruments is where the capillary tube joins the expansion bulb. First, engine movement and vibration react on the tube since it is fairly rigidly attached to the body, and in the course of time metal fatigue is inevitable.

A couple of coils in the tubing where it is attached to the bulb and again when it enters the body will, however, reduce the effect of this inbuilt disadvantage.

Secondly, all too often damage is caused by removing the expansion bulb (for decoke etc.) using only one spanner, which invariably results in the tubing being twisted. The 100% safeguard against this is to use three spanners, one to hold the adapter. One to hold the expansion bulb from turning, and another to undo the union nut.

****

This article was published in Car Mechanics in March 1968.

Oil/Temp Gauge

Capillary Nut Removal Tool

HOME

Buy a cheap spark plug socket of proper size (13/16, 6 point). These sockets often come with motorcycles, chainsaws, lawn mowers, etc. Buy the type you place a screwdriver through crossways to turn.

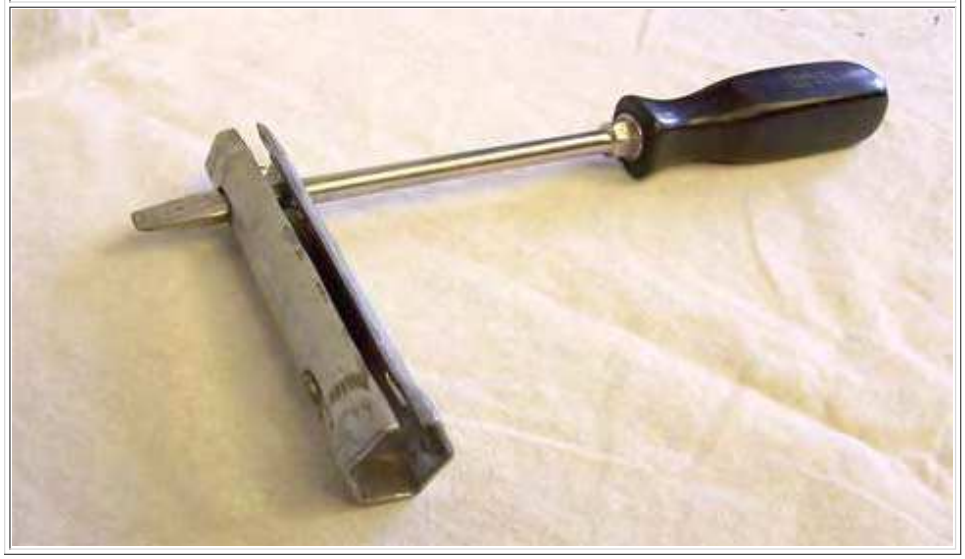

You will need to then cut a slot through the socket, lengthwise

	from top to bottom, using a die grinder with a cut off wheel attachment. This will allow the tube to feed through the center of the socket, allowing it to be slid over the capillary tube nut. Use a screwdriver to turn the socket. You may need to place a heater hose clamp over the socket to keep it from spreading and slipping on the nut. You can take the thermostat housing off the head and spray	

	penetrating oil around the inside of the capillary tube and nut and that may help.	

Website: www.foreverhealeys.com ©

LENGTH OF TEMP GAUGE CAPILLARY TUBE

If you look on the back side of the nut there is a length stamped
there in feet and inches.

David Nock©
British Car Specialists
Stockton Ca 95205
209-948-8767

www.britishcarspecialists.com

On Oct 12, 2008, at 5:10 PM, John Loftus wrote:

Does anyone have a spare water temp/oil pressure gauge that they could measure the length of the spiral protected capillary tube?

I had mine rebuilt months ago and when installed can only manage one small loop (less than 2" dia.) in front of the firewall. And that's with the rest of the line going in a straight line from back of gauge to the firewall opening.

I know it's too short but would like to double check the proper length before calling them.

The concours book says the copper tube should be zinc plated. I requested that mine be zinc plated but the vendor said they have never had this request before (and did not zinc plate it). Who's right? (vendor is Moma .. not some unknown source).

Cheers,
John

From - http://autox.team.net/mailman/listinfo/healeys

TECHNICAL REPORT
THERMOSTATS

Here's an interesting bit on overheating and well worth a try if you suffer these problems. The fatter radiator and fiberglass fan has solved my overheating but this hint may your answer. With thanks to Graeme Campbell (no relation) - Triumph Register - Feb 1996.

THERMOSTATS

Handy Hint No 4219 by Graeme Campbell

The original thermostat fitted to the TR had an OD of 54mm and ID opening of 33mm. After replacing the original unit with BMC one listed for the MGA etc., I found that, after coming up to the correct temperature, there was no cooling effect in reserve with the temp. soon rising in traffic. After doing all the obvious - I had already fitted a restrictor in the bypass hose - I ordered and fitted the radiator shrouds. This had a big effect on keeping the temp. correct on the highway, but it was still running too warm in traffic. I suspected the thermostat was restricting flow through the radiator as its ID was only 25mm as against 33 for the original. After a lot of phone calls, I was told the only thermostats available with 54 OD were all 25 ID. Repco were helpful1 and we found one with 44mm ID and 64mm OD with an opening temp. of 77 Deg C. I was quite easily able to grind the OD down to the required 54mm and the TIZ was soon up and running.

The first drive found the TR caught in Christmas traffic but the needle never went over the eight of the 185' F on the gauge. On the open road it sits on the one of the 185.

The thermostat is made for the Holden Commodore VL 6 cylinder and Nissan Skyline 3Litre Dayco Pacific. Part # DTl 9E-BP and costs $33 retail.

****

Steve Copplin is trying out this thermostat in his MGA and will report on his results.

HAVE FUN,
BARRY CAMPBELL

N.S.W. AUSTRALIA Austin-Healey OWNERS CLUB FLAT CHAT

April 1996

Steve Copplin tried out a larger aperture thermostat that was reported in April Flat Chat. His MGA was overheating in traffic and after cutting down the outside diameter to fit the housing the maximum temperature in traffic 190 deg F and after leaving it idling in the drive 190 was the furthest it would go. He used a TRIDON – TT 2-170 that's specified for 1986-88 Commodore and Nissan Skyline. The one mentioned in last month's report is a DAYCO DT19E-BP. Steve had to cut away the base of the TRDON to clear the temp sender mounted in the head just below the thermostat housing. With this modification, the plastic Texas Cooler Fan from the Healey Factory and a fatter radiator from Sydney Wide Radiators you can solve your overheating problems. Eric Rudd has the insulating material to line the cabin and floor so you and your passenger will be more comfortable. Say goodbye to boiling the engine and occupants.

HAVE FUN

BARRY CAMPBELL

N.S.W. AUSTRALIA
Austin-Healey
OWNERS CLUB
FLAT CHAT

May 1996

The latest information on thermostats is the TRIDON TT2028. This has an 0.D.of 54mm(no need to cut down) and operates at 77C (170F). This has a larger I.D. of 34mm, which is close to the original bellows type thermostat allowing greater flow at idle.

HAVE FUN,
BARRY CAMPBELL

N.S.W. AUSTRALIA
Austin-Healey
OWNERS CLUB
FLAT CHAT

September 1996

UPDATE

From Barry Campbell MAY 2003

Tridon have a thermostat that doesn't need any modification to fit.

The number is TT 2000

REAL HEALEY NATTER

82 Cars received their annual clean and polish so they could sparkle in the sunshine at Terrigal. 1 unrestored and 2 bare chassis could only raise a twinkle, but watch out for them next year.

There were 37 out of 57 Club Registered Healeys, this must surely be a record. Next year let's try and make it 100%.

December Australian Classic Car Monthly has a great 3/4 page spread on our Concourse by Pat Quinn with photo's by Michelle Coates. Michelle was our photographer on the day and took rolls of film, so if you proud owners want a record of your pride and joy in that glorious sunshine contact her on 9918 6083.

Eric Rudd trailered his newly finished Rally Replica, but on the next weekend drove it to the Triumph Concourse at Gledswood Winery, without any mechanical problems. Quite some shake down cruise from Avalon.

TINTED REAR VISION MIRRORS

Victor Glass at 643 Pittwater Rd Dee Why has some 3mm tinted mirror which is ideal for your rear vision mirror if you do a bit of night driving. I had some fitted to the centre mirror and the door 'Bullet' mirror, now there is a lot less glare from modern high output headlights, lights which are out of adjustment and truck lights which are most times dead level with the mirror. The mirror is only lightly tinted so is still ok for day driving.

DMH-000
(THE HARDIE'S 100)

P.S. Those who wouldn't stand for office at the general meeting should remember that a committee is - A group of the unwilling, picked from the unfit to do the unnecessary - so don't complain about who you got.

TOOL KIT PHOTOGRAPHS

FROM THE COLLECTION OF THE LATE BILL JOHNSTONE

JOHN HARPER'S ARTICLES

No 10

TRIM - 1

AUGUST 1991

Comment

When I first embarked on this series of articles I was hoping that others 100 owners would contribute. This I am pleased to say has already happened and some very valuable and interesting information has been sent to me which is being incorporated into the FEEDBACK sections. However I have recently been sent a very useful and extremely well detailed document from Don Hall an Eastern Centre 1 00 owner who has just finished his rebuild. The subject is Trimming and covers the whole of the cockpit and boot area. It goes into the full details of how to deal with every single piece of trim and therefore cannot be squeezed into one Revcounter. In fact I estimate that if I run it alongside my normal sections it would need to be split into four. This is what I plan to do starting next Revcounter but to kick things off I have included the introductory section below.

Introduction

Before getting into the detail here are some general points, which may be useful in getting your 100 to an original state as far as carpets are concerned.

(1) Floor carpets do not have any binding. Cockpit floor carpets contact the sides of the gearbox as well as the sill. Pedal box floor carpets do not have any binding around the accelerator pedal or the sill.

(2) The handbrake cut out is not bound and the metal of the tunnel behind it is not covered with vinyl.

(3) The gearbox cover, centre tunnel and centre tunnel extension carpets are all glued to the metal.

(4) There should be one heel pad, this being on the driver's side and has Austin on it. This applied to all 100s.

(5) The original Karvel carpet was hessian backed.

(6) Carpets edged with vinyl are: a) Gearbox carpet - all edges including the gearbox cutout but not the oil inspection panel

and ashtray. b) Centre tunnel - front and rear edges c) Inner pedal box covering assembly - rear edge

CARPETING and TRIMMING MATERIALS

An Armacord Boot Kit
A Cockpit carpet Kit
Underfelt

Vinyl - for Trim panels & Parcel Tray to match that on the seats.
Carpet - for Parcel Tray.
Padding - thin foam, velour or similar
1/8" waterproof three ply - for trim panels
Millboard - for inner door and outer pedal box panels 1/8" sheet rubber for gearbox apron
1/8" x 5/8" sponge rubber for the top of gearbox extension panel.
Draught roll.
Quadrant sponge rubber for lower edge of doors, 1/2" x 1/2"
Masking tape 3/4" wide.
5 x 1 litre cans of 3M or Dunlop adhesive.
Cardboard & thick paper for patterns

TOOLS

1 Large pair Scissors
I Flexible measuring tape
1 3ft straight edge
1 Square l Hammer
1 Light hammer
2 or more 4" or 5" "G" clamps
1" x 1/4" lengths of wood
1 3/4" Wad punch
1 Piece of hard Wood (6" x 6")
Disposable scalpels or hobby knifes Felt pens
1 Compass for scribing circles
Screwdrivers
Weights
4 Sharp points made from 5/64" rod
1 Small stiff brush for gluing
1 Wallpaper roller
Scraper or scrapers to spread glue
Some short haired carpet offcuts
3/4" Wad Punch

If you wish to make the last item yourself. Obtain a 3" length of 3/4" I.D. steel tube with about 3/64" wall thickness. Grind a taper on the outside to produce a sharp cutting edge. A piece of very hard wood makes a suitable surface to strike the punch against.

Sharp point - To make these cut 4 x 2" lengths of rod approx. 5/64" in diameter & sharpen one end to a point,

"G" Clamps & pieces of wood 1 " x 1/4" can be used to clamp carpet in place prior to gluing or keeping glued areas compressed while the adhesive sets.

GENERAL COMMENTS

1. ADHESIVE

Adhesive is both expensive & very volatile therefore when not in use, keep the lid on. As it gets thicker, it sets slower. To apply adhesive use one of the following a small stiff brush for small area, a scraper - 3", 2" or 1 " for nonporous surfaces. This can be dipped in adhesive and then used as a spreader. A scraper with a piece of short-haired carpet folded over the edge, This is used for porous surfaces such as underfelt, Armacord, etc. The brush can be cleaned with cellulose thinners. Surplus adhesive can be cleaned off surfaces and carpets with petrol and a cloth.

2.PATTERNS

If the original pieces of Armacord, carpet, etc are available they can be checked against the car and then used to modify the new items to suit. If not, the new items have to be carefully modified before gluing. I made patterns first.

If the original panels are not available, patterns have to be measured, drawn and cut to enable the final panels to be marked out & cut. These can only be finalised when carpet and Armacord are in place.

Paper patterns are necessary to transfer the position of the screw holes in the outer sides of the pedal box & the rear quarter to the trim panels.

I bought a boot kit and a cockpit kit but did not have any old carpet or trim for patterns so I had to spend a lot of time cutting them. The bought kits have the edges already bound where necessary but be warned, some have binding where it should not be.

3. UNDERFELT

Underfelt is not supplied with the carpet set so it has to be purchased and cut for the inner sides of the pedal boxes, the upper floor of the pedal boxes, the gearbox extension panel, the pedal box and cockpit floors.

Originally, the cockpit floor from the front edge of the seat backwards, did not have underfelt, only Armacord. I choose to extend the underfelt back to the heelboard for better insulation, A carefully cut pattern is essential for this long piece.

Punching holes in the underfelt can be managed as follows.

Cockpit floor - having first positioned the underfelt correctly, steady it with weights and push the pointed rod up through the self-tapper hole in the floor until the point just appears. Apply some masking tape & just push the point through. Using a compass, draw a circle 3/4" in diameter having marked all the holes, remove the underfelt and punch them out.

Pedal box Carpets and Underfelt - Top Edge. As the screw holes cannot be reached from the reverse side of the metal floor another approach is required. Mark out the position of the ring clips on the carpet, say 2" in from each side and fit them but retain the masking tape used for marking.

Apply masking tape to the area beneath on the underfelt and using the sharp rod through the centre of the ring-clip, mark the centre on the underfelt. Punch the holes in the underfelt and replace. Apply masking tape to the metal surface, replace the carpet and mark the place for the stud screws. Drill the holes and screw the studs into place.

4. ATTACHING CLIPS

Replace the underfelt and carefully position the carpet. Push a point up through the screw hole and through the carpet until the point just appears. Apply masking tape and using the point hole as centre, mark a circle the diameter of the ring. Push the ring points through the carpet, put the clip on the ring & turn the points with the light hammer.

5. GLUING PROCEDURE

In many cases it is wise to glue small areas at a time to achieve the desired positioning of Armacord, carpet, vinyl, etc. Also it is best to apply adhesive all over the back of the Armacord, etc and then over a small area of metal and press into place. Then apply adhesive over the next area of metal & press the Armacord etc into place and so on. Sometimes it is possible to apply adhesive over large areas on both surfaces if it is straightforward. Start pressing along one edge. Note: Once Armacord has been pressed into place, it is impossible to remove without tearing fibres off the back.

6. VINYL PANELS

For the padding under the vinyl trim, I used velour purchased from a local trimmer but thin foam or other thick material could be used. I cut the velour roughly to the shape of the ply panel, about 1/4" oversize, glued it on & trimmed the velour back to the edges.

The vinyl should be cut so it has 1 " to 1 1/2" overlap. The larger the panel the wider the overlap. Lay the vinyl face down and place the panel with the velour facing down, on the back. Equalise the edges, apply adhesive to both surfaces along the edges and after lightly stretching the vinyl round the edges, glue the edges to the reverse of the panel, leaving the corners unglued. The outer corners need the surplus removing carefully in the shape of a V not quite to the edges (1/8" clear) otherwise it will show. Apply adhesive and press into place. Generally a neat result can be achieved but it seems inevitable that a small bulge will result. The inner corners of the door trim requires cuts to allow the vinyl to spread as it is pulled down but only cut to within 1/8" of the edge of the panel or it will show. These corners may need a weight placed on them while the adhesive sets.

 To contact the author please write to him at: 7 Cedar Avenue, Ickleford, Hitchin, Herts. SG5 3XU. or
Telephone 0462-51970.

JOHN HARPER'S ARTICLES
No 11A

OCTOBER 1991

Trim 2

This article follows on directly from TRIM 1 on page 17 of the August 1991 Revcounter. The trim articles are kindly produced by Don Hall

7. GEARBOX APRON - RUBBER HEAT DEFECTOR

The rubber gearbox apron covers the engine side of the gearbox extension panel and hangs down to the lower edge of the chassis. It should have firm contact with the gearbox. After the carpet has been glued to the gearbox extension panel, the apron is then glued on covering the returned edges of the carpet. A pattern is required.

8. **STARTING POINT**

As many edges overlap, the correct starting point has to be used so that the correct order of gluing items in place can be followed.

Note: The following identification numbers and descriptions used come from the official 100 parts list.

FITTING ORDER

A. BOOT

1. W2 Rear wheelarch covering assembly, RH and LH Gluing these into place requires care to avoid wrinkles occurring on the inner wheel arch.

2. W6 Boot compartment divisional panel covering assembly. The vinyl join needs to be centralised on the divisional panel edge.

3. W9 Tool compartment back covering

4. Ul3 Floor section of spare wheel covering assembly. The vinyl edging overlaps the edge of the tool compartment. Also a 1/4" space is required for the Armacord to fit under the tapered block of wood which restrain the spare wheel.

5. Wl1 Axle cover panel covering assembly. The lower edge fits in front of the petrol tank.

6. W10 Tool compartment base. It is necessary to cut a hole for the master switch.

7. Wl RH and LH rear quarter inner covering assembly.

8. W5 RH and LH boot side floor covering assembly.(items 8 and 9 may be left loose. Then they can be removed if damp.)

9. W7 Rear skirt covering assembly. The rear edge with binding fits up under the edge of the boot opening & keeps the tail light loom in place. The front edge has to be trimmed to fit under the petrol tank and around the mounting straps.

10. W4 Boot main floor covering assembly (This also remains loose.)

B. COCKPIT

1. Centre tunnel extension assembly (carpet). This can be located in place with two "G" clamps and a strip of wood along the top. One side can be glued and when the glue is set, remove the clamps and glue the other side.

2. U7 RH and LH rear wheelarch side cockpit covering assembly (vinyl). These vinyl assemblies are glued direct to the metal. Using a curved mould, glue the loose vinyl edges of the piping on the reverse side of the trim. Then glue the top part of the arch making sure that the vinyl is pressed into the flat area. Follow this with the inner wheel arch being careful to avoid wrinkles.

3. X4 RH and LH sill covering (carpet). Glue the top edge first, working from the pedal box back, when this is set, glue the remainder in sections.

4. W3 Heelboard covering assembly (Armacord) This surrounds the battery access panel opening and goes along the top under the hinges so be careful when cutting out the opening.

5. U13 Spare wheel covering assembly (vinyl section). This really requires two people, as it needs careful placement. Originally it also had 3 rivets along the top edge under the lip.

6. W8 Cockpit rear bulkhead-covering assembly (Armacord). The top vinyl edging goes under the rear aluminium cockpit trim but start with the edge which fits under the lip on the upper edge of the spare wheel cover.

7. RH and LH inner pedal box covering assembly (carpet) plus underfelt. The underfelt has to be cut and glued in place. Then start by gluing the carpet edge to the rear (gearbox) corner of the panel and proceed forwards. Finally glue the vinyl onto the flange.

8. U4 RH and LH scuttle casing assembly (vinyl + millboard) Having made the panels, they are screwed into place with five small self-tap screws and cup washers.

9. X5 Gearbox cover extension panel covering (carpet) X2 Underfelt X3 Heat deflector rubber

It is possible that more than one layer of underfelt will be necessary to obtain a good contact with the gearbox cover flange. As well as the flat surfaces, the carpet is glued to the flange, which fits under the gearbox cover and is folded around the vertical edges of the gearbox extension panel and glued to the back (engine side). The heat deflector rubber is glued on the engine side of the gearbox extension panel and covers the edges of the carpet.

DISCLAIMER: Whilst every effort is made to check the information incorporated in this series, no responsibility can be accepted for errors. However, corrections, improvements, suggestions & additional information will be very welcome (in writing please).

 To contact the author please write to him at: 7 Cedar Avenue, Ickleford, Hitchin, Herts. SG5 3XU. or Telephone 0462-51970.

JOHN HARPER'S ARTICLES
No 12A
DECEMBER1991

Trim 3

This third installment of the trim articles concludes the series which started on page 17 of the August Revcounter and continued on page 7 of the October Revcounter. My grateful thanks to Don Hall of the Eastern Centre for this input.

1 0. U8 Gearbox cover assembly (carpet + vinyl) To start, glue the vinyl pieces for the rear edge and flat area with the gearlever hole in place. Also the inspection panel has to be covered in vinyl. The ashtray can be used to locate the rear of the carpet cover and for the front a "G" clamp and wood can be used. Apply adhesive to similar areas of carpet and metal as gluing proceeds down the side. When this is completed, remove the clamp and glue the other side. The lower edges are difficult to persuade to follow the contour and small areas at a time are best. "G" clamping can be useful.
Leave the vinyl over the front edge until last.

11. Wl 3 Centre tunnel covering (carpet + vinyl). Locate in position with "G" clamps and wood. Glue the vinyl trim last and fold it under the metal.

12. U5 RH and LH rear quarter casing assembly (vinyl + three-ply)

a. Holes have to drilled in the ply for 3 screws, 3 hood mounting bolts and the screw for the hood clip.
b. Pad the panel with velour and glue vinyl into place.
c. Cut a piece of millboard slightly smaller than the shape of each hood frame mounting plate.
Cut out a recess for each rivet and glue it to the plate. Cut out the boltholes. (When screwed into place, the padding should cause the vinyl to cover the edge of the millboard.)
d. Screw into place.

13. U9 Battery access panel assembly (Armacord)
This is very fiddly. "G" clamping is useful in holding edges in place. When completed, it is bolted into place with flat-headed bolts.

14. U l1 Battery access fixing straps (leather). Salvage the original ones. Attach to panel.

15. Lift-a-Dot studs for U l1 Fix two Lift-a-Dot studs for U l1 on the heelboard.

16. Fit:

a. Gearbox extension panel 6 screws plus rubber strip b. Gearbox cover 7 screws
c. Centre tunnel 4 screws

17. U 1 2 Centre armrest pad assembly (leather + vinyl)
Fit 4 Tenax studs on the sides of the centre tunnel extension

18. Underfelt for floors, pedalboxes, etc.
Assuming the pedal box and all the cockpit floor are to be covered, the single piece of underfelt extends from the top of the pedalbox carpet to the heelboard. Cutouts are required for the seat bases, dipswitch, pedal shafts and accelerator pedal. Originally, the pedalbox underfelt and carpet were glued in place. If they are held in place with ring clips, they can be removed for cleaning, etc.

19. X7/8 RH and LH pedalbox carpets (carpet)
The driver's side needs to be modified to fit around the dipswitch and pedals. Both carpets need trimming carefully to exactly fit the space.

20. X6 RH and LH Front carpet assembly (carpet)
These need to be trimmed to fit snugly between the gearbox cover and the sills. (They should not be bound). If the floor has been renewed, decide on the position of the stud screws avoiding the gearbox flange and the chassis and drill.

21.Underfelt holes.
Follow the general instructions to punch 4 holes in each side. Also 2 holes are required in the lower edge of the pedalbox carpet where it fits under the floor carpet.

22. X7/8 RH and LH Pedalbox carpets
Follow general instructions to fit ring clips and punch holes in the underfelt.

23.Fit floor carpets and underfelt
Screw the studs into place and fit the underfelt and carpet. Some spacing washers may be necessary.

24.Airbox underfelt
Cut and glue underfelt to the underside of the airbox RH and LH.
Taper the edges around the airvents and the visible edge.

25. U6 Parcel tray assembly (vinyl + carpet)
Cut and glue vinyl to parcel tray. The vinyl edge should be 1 " onto the lower surface. Cut and glue the carpet fining. Screw parcel tray into place.

26. U 12 Central tunnel armrest assembly.
Attach.

27. W12 RH and LH underseat covering assembly (Armacord) Fit

28. V3 RH and LH inner door covering (vinyl)
This is glued to the wood insert and then down the door and across the bottom.

29. U3 RH and LH inner door casing assembly (vinyl + millboard)
The vinyl is glued to the millboard, which needs careful preshaping. Only the lower edge of the vinyl requires folding over the millboard. It is screwed into place with 3 small screws and cup washers.

30. U2 RH and LH Door casing assembly {vinyl + three-ply)

The 1/8" ply should be cut just short of the door edges so that the padded vinyl will be level with the edges. Remember to drill the screw holes in the ply before gluing the padding and vinyl in place. The number of screws is stated in the service manual to be 14.

31. Draught roll for front and rear edges of U2 RH and LH.

The top and bottom ends of each section have to be folded over after shortening the rubber supporting tube. The roll is nipped between the door casing and the metal of the door (No glue). Screw the door casing assembly into place.

32.Door catch finisher plate.

Screw into place.

33.Draught roll for RH and LH U4 scuttle casing assembly. (See page 3 DOORS in the Parts List)This extends right up behind the windscreen pillar casting (side stanchion) and is nipped between the scuttle casing assembly and the metal of the scuttle (no glue). U4 RH and LH have to be loosened for this purpose.

34.Sealing.Rubbers

The quadrant rubber is 1/2" x 1/2" and should be glued in the corner at the bottom of the door. Note: To avoid having to remove the rear quarter panels, the aluminium door shut covers should be fitted first. The sill covers can be fitted as the sill carpet has been glued in place.

DISCLAIMER: Whilst every effort is made to check the information incorporated in this series, no responsibility can be accepted for errors. However, corrections, improvements, suggestions & additional information will be very welcome (in writing please).

 To contact the author please write to him at: 7 Cedar Avenue, Ickleford, Hitchin, Herts. SG5 3XU. or Telephone 0462-51970.

TECHNICAL REPORT
TYRES AND THEIR SIZES

Choosing tyres, the final choice is yours and here are a few things to consider before you part with your hard- earned cash Some of the choices I noted at Amaroo

Owner	Rim	Car Width	Maker	Type	Size
Quinn	4”	BN 3	Pirelli	Centurato	165 SR
Rcberts	4”	100/S	Michelin	XAS	175HR
Campbell	4”	BN 4	Pirelli	Cinturato	165 SR
Hancock	4”	100/4	Michelin	XAS	165 HR
Wakeling	4 ½”	BJ 8	Yokohama	A509	185/65 R
Trisic	5 ½”	BJ 8	Yokohama	A321 XR	185/70 SR
Campbell	5 ½”	BN 4	Michelin	ZX	175 SR
Dunn	6”	3000	Dunlop	D60MZ	195/60R
Rule	6”	3000	Dunlop	Formula W1	206/60R
Armour	*6”*	3000	Bridgestone	Supercat	205/65 HR
Read	*6”*	BN4	Bridgestone	Supercat	205/65 BR
Viaggio	7”	BN4	Bridgestone	Potenza	225/60VR
Ford	7”	100/4	Dunlop	FormulaW1	215/60 R
Original	**4”**	**All models**	**Dunlop**	**Road Speed**	**5.99” (150mm)**

A small sampling but quite a range of maker/size. Other makes are Firestone, Kelly, Falken, Avon etc- The first size quoted, 165.,195 etc. is the width of the tyre measured across the walls in millimetres. The height of the tyre (ASPECT RATIO) is 82% unless stated by a second figure ie. 185/65 indicated that the height is 65% of the width, a lower profile than the standard, in this instance 120.25 mm. Tyre sizes always end in 5 (I don’t know why) so the original Dunlop Road Speed would now be a 155 size. The smallest I’ve seen on 4 rims is 165. To arrive at the rim width (measured on the inside) for a given tyre width multiply by 70% and go to nearest ½”. Rim widths are in inches and tyre sizes in millimetres so you have to convert.

Original Dunlop tyre 5.90 x 70% = 4.l3" nearest 4”, modern 205mm x 70% = 5.65” nearest 6”. There is a degree of latitude permitted with the 70% factor and you could go to the next larger or smaller rim width, usually ½” smaller and 1" larger. The 205 tyre would, go on a rim 5 ½” to 7'. On the wider rim it will be firmer, the smaller size will allow more movement of the tyre. Too big a tyre or too small a rim will cause "walking” and be dangerous.

A lower profile tyre with a ratio of 60% instead of the standard 82% gives better handling, firmer ride, smaller diameter and thence marginally faster acceleration and less mpg.

OTHER INFORMATION IMPRINTED ON TYRES

S	SPEEDRATED
R	RADIAL, TYRE
15	15'DIA DIAMETER WHEEL
H	SPEED RATED TO 210 KPH
V	SPEED RATED TO 240 KPH
Z	SPEED RATED OVER 24OKPH

Number preceding the speed rates letter, refer to a manufacturers "LOAD RATING". You'll also find on some tyres a WEAR FACTOR of A, B or C or figures 160, 180, 240 -the higher the number the longer wear you'll get.

Hope this is of help and it all started with Hans Spranger asking me to recommend a tyre, this should assist a little. Personally I prefer a soft compound with a low wear factor. I've done 30,000 Miles on the Michlins and they look as though they'll do another 30,000 but they're 8 years old now and getting harder and a bit slippery at the moment. I'm looking at some Yokohama A88RS 195/60 for 5 ½" rims. They are $220 each-a bit expensive but good for club events - maybe I can break 70 secs. at Amaroo.

Have fun
Barry Campbell.

N.S.W. AUSTRALIA Austin-Healey OWNERS CLUB FLAT CHAT

August 1994

TECHNICAL REPORT

Sometimes I am asked 'What size tyre should my car have?"

Well let me say at the outset that there is no such thing as a correct tyre. Even if you could get a set of original style cross ply Dunlop Road Speeds, you would use these for concourse purposes only, and not for general road use. Modern roads, price, availability and superior performance make the modern radial tyre virtually mandatory. I personally think that the tyre to use is one that looks in proportion with the car, not too skinny and not too fat, and also suits the style of car. For instance, if your Healey is a perfectly standard one, used for normal outings and for road use mainly, then a fairly modestly sized tyre would be the best choice. However, if you have a bit of a "muscle" car, a rally replica or similar, and used for the occasional super sprint or competition event, then a slightly wider and lower aspect tyre would be the go.

At the recent Concourse at Darling Harbour, as a matter of interest, and to help fill in the time, I did a survey on what size lyres are currently being used on club cars, with some interesting results. For convenience I will present the results in 3 groups

	Tyre Size Section/Aspect Ratio	No. of Cars
Group 1	4 Cylinder Cars	
	165	4
	175/70	1
	185/70	2
	195/65	3) Total of 4
	195/70	1)
Group 2	100-6/MKI/MKII	
	165	1
	195/85	7) Total of 8
	195/70	1)
	205/60	1] Total of 8
	205/65	7]
	225/60	1
Group 3	BJ7/BJ8	
	165	2
	175	1
	185/65	1) Total of 4
	185/70	3)
	195/60	1] Total of 4
	195/65	1]
	195/70	2]
	205/65	2

As you can see, in Group 1, 4 cyl cars, the largest tyre section is 195, with the majority in the 165 to 185 ranges. This is in keeping with the smaller, lighter character of this model.

In Group 2, 100-6/MKI/MKII the average tyre section tends to be larger, with the majority being 195 and 205 sections. Perhaps this is in keeping with the heavier, homier character of this model.

In Group 3, BJ7/BJ8, the average tyre size tends to be between that of Groups 1 and 2, with the majority being in the 185 to 195 ranges. Perhaps this is because this model of car is heavier looking than the 4 cylinder model, but with it's wind-up windows and convertible top, a little more conservative and family oriented than its older and more sporty cousin with removable side screens and fold-away top.

Well, there you have it. You pays your money and you takes your pick.

I have deliberately avoided getting involved with brands of tyres, as the availability of various tyres seems to change almost overnight with manufacturers adding or deleting tyre sections from their catalogues according to demand. The best thing to do when the time comes is to discuss price and availability with a reputable tyre outlet, and make your choice from there.

Happy Healeying,
John Dowsett

REAL HEALEY NATTER

N.S.W. AUSTRALIA FLAT CHAT

MAY 2001

TYRE SIZES

Below is a chart downloaded from the Internet, it has been configured for the Healey standard size of 165 x 15. Just read off the size in the rim size column against the aspect ratio.

The original showed rim sizes 13" to 18" aspect ratios 85 down to 30. All you do is enter standard tyre size, aspect ratio and rim size and the chart shows alternate tyre/aspect sizes in the rim size column, also shown is the Speedo correction as plus and minus (in brackets).

Size	165
Aspect	85
Rim	15

Width	6.50	Inches
Height	26.04	Inches
Circumference	81.82	Inches

Aspect	15" WHEEL		RIM WIDTH
85 Series	165	0.0%	4.0 to 5.5
80 Series	175	(0.1%)	4.5 to 6.0
78 Series	175	(1.1%)	4.5 to 6.0
75 Series	185	(0.5%)	5.0 to 6.5
70 Series	205	1.0%	5.5 to 7.0
65 Series	215	(0.2%)	5.5 to 8.5
60 Series	235	0.2%	6.0 to 9.0
55 Series	255	0.0%	6.5 to 10.0

NOTE: Some suggested tire sizes might not be available.

062 (THE HARDIES 100)

PS. A copy of the original program as well as two others can be downloaded from The Web at www.bmwe30.net website and then go to Downloads or we can supply a floppy.

Tech Tips

by Norman Nock ©
British Car Specialists, Stockton, California

UNIVERSALS

The front universal on Healeys is usually neglected due to its location, but there is another problem that is also common on most British cars.

Due to the short grease fittings found on these cars, the grease gun coupling will not snap onto the universal fitting causing the grease to bypass its intended destination.

If this problem continues the universal will wear out quickly causing a clunking sound when you accelerate or take your foot off the gas. Another symptom is bad vibration at low speeds.

To avoid this kind of problem replace both drive shaft universal joint grease fittings with the longer 1⅝" grease fitting.

The front universal can now be greased from under the car slightly forward of the centre frame crucifix. When you apply grease to the new fitting you should be able to hear the familiar "squirt" as the grease exits after passing through the rollers inside the universal joint.

The grease fitting can be replaced from under the car with a ¼" drive long extension. The rear fitting is easily replaced under the car while on four stands. I don't recommend trying to replace the forward grease fitting via the access hole between the seats. You could easily lose your new fitting in all the grease next to the drive shaft.

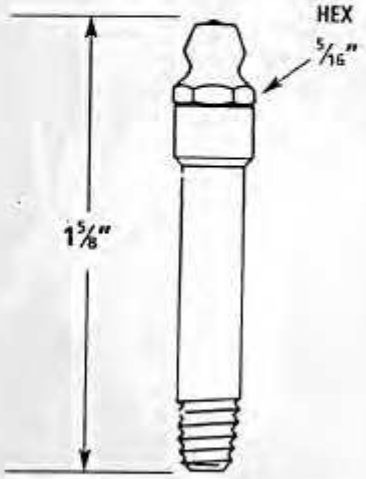

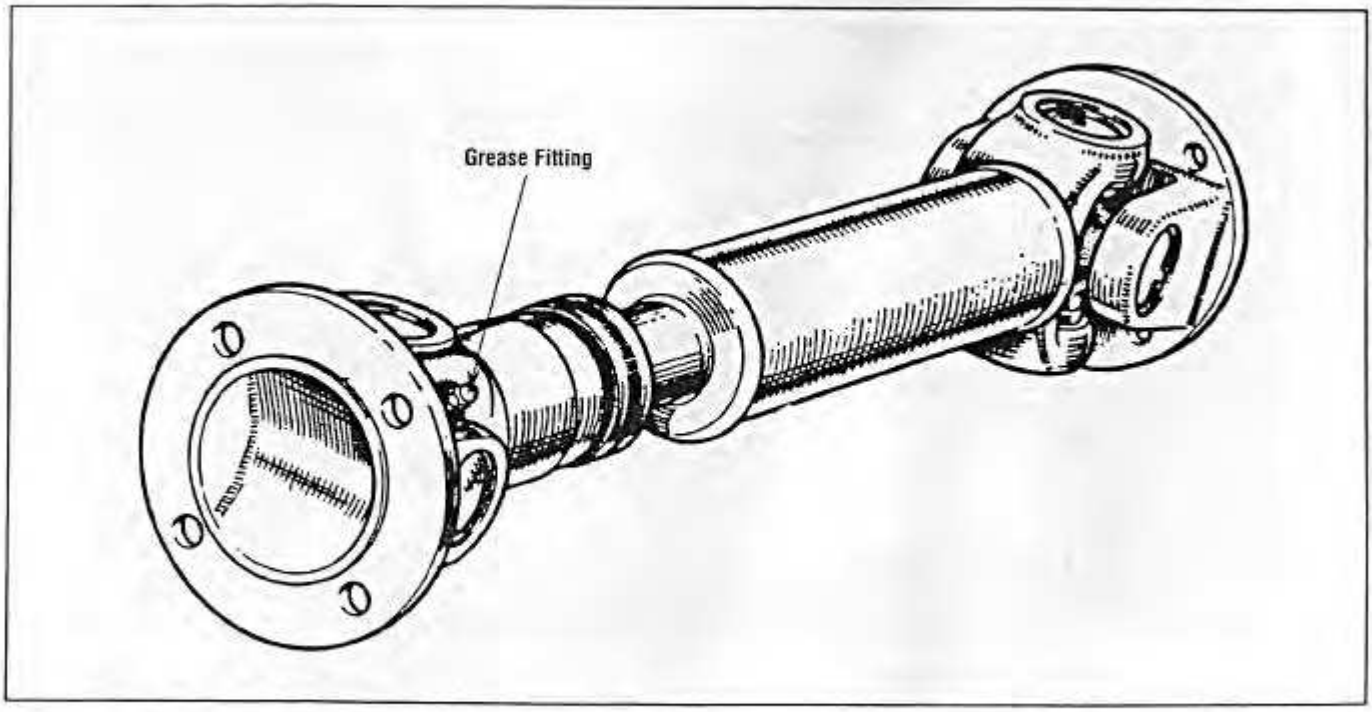

Lifted from ROADSTER - THE HEALEY DRIVERS CLUB PERRANPORTH April/May 2002

TECHNICAL REPORT

UNLEADED FUEL

The Technical Department still has a very limited number of distributor contact sets, as mentioned at the October meeting. There is only one set of 100 points and one set of- 100/6-3000 points left. The cost of the points is $15.00 a set.

There are a number of Crankshaft oil seal kits, for 6 cylinder available. The cost of these seals is $150.00. For those in the throws of restoration it is a good time to fit one of these seals to stop oil leaks from the rear of your engine.

The rumours emanating from the U.S.A. have it that people have been using unleaded fuel in their Healeys for some considerable time without problem. The reason for this would seem to be (that) the amount of lead impregnated into the valve and the valve seat, over decades of leaded fuel use, is sufficient to offset the lack of lubricant in unleaded fuel.

However, if a valve grind is performed on that cylinder head the above advantage is lost due to the facing of the valves and grinding of the valve seats removing the lead impregnated metal. Remembering that leaded fuel has a very limited life, this would be a good time to convert to high octane unleaded fuel. Shell Optimax (98RON) is available fairly widely and I believe Mobil has a lead replacement fuel. BP I think is still testing. A performance lift may also be experienced with the 6RON difference between leaded and unleaded, so start tweaking.

See you all **a**t the AGM.
Ian Howard.

N.S.W. AUSTRALIA Austin-Healey OWNERS CLUB FLAT CHAT

November 2000

TECHNICAL REPORT

Since my report in Flat Chat last month I have been speaking with one of the workers at an SU carburetor specialist, to remain anonymous, who has advised me to be careful using the high octane unleaded fuels in classic cars such as ours.

A problem has arisen whereby the rubber components, in some cars, are being affected by the high-octane unleaded fuels. The specialist advises that they have had problems with Jaguar fuel pumps leaking and can only put it down to the owner using, in one case, Optimax, which seems to have damaged the pump diaphragm. The fuel could also affect other rubber parts between the fuel tank and the engine. The above is not to be taken as “Gospel” but, as an observation.

All the well-known fuel suppliers have lead Replacement Petrol available. They all advise that the fuel is rated at 96RON, (Research Octane Number), and that their fuels contain a valve lubrication additive. Therefore, we should be able to use our cars on LRP forever and a day.

Congratulations to our new Technical Officer for the first year of the new millenium, Mr. John Dowsett.

A very happy Christmas and a healthy and prosperous New Year to everyone.
Ian Howard.

N.S.W. AUSTRALIA Austin-Healey OWNERS CLUB FLAT CHAT

December 2000

TECHNICAL REPORT

Judging by interest shown and comments made at the February general meeting, it would seem that the question of fuel still tops the list of concerns amongst our club members.

When the government several years ago first flagged the eventual abolition of leaded fuel, there was a general feeling of uncertainty. Even a fear in some quarters that this could spell the end of our cars, forcing them off the road because of their possible inability to run on the new fangled unleaded fuels, and their inability meet the new emission laws. However sanity, no doubt helped by the strength of the vintage and classic car movement, has prevailed and although inconvenient, there are several options available.

The main ones are: -

1. Do nothing. The major oil companies are already marketing lead-free 'super' fuel, which presumably will not cause the valve-seat recession, which is the major problem with standard unleaded petrol (U.L.P.). There are 2 main drawbacks with this, firstly, in spite of the oil company's claims, the octane rating does not seem to be as high as the traditional leaded fuels, secondly, this fuel may only be available for a few more years anyhow.

2. Depending on the compression ratio of your engine, use either standard U.LP, premium leaded (P.U.L.P.), or Optimax, and add one of the proprietary lubricant additives to each tankful of fuel to protect the valve seats.

3, Modify the cylinder head by fitting hardened exhaust valve seats and modern exhaust valves, and use one of the unleaded fuels as in option 2 without use of additives.

Many of us have already modified our cylinder heads, and for us there is no longer a problem. I converted my own A70 utility some 2 years ago, and with a compression ratio of about 9:1, have been happily running on ULP ever since.

Incidentally, contrary to what you may have been told, there is no technical reason why a catalytic converter must be installed if using non-leaded petrol on older cars. If properly tuned and in good condition, the engines will run quite cleanly, and I do not think we will have any problems meeting new emission standards.

SO, MY RECOMMENDATIONS ARE: -

If you have already modified your cylinder head, congratulations, you no longer have a problem.

If you haven't, then don't panic, continue using the new unleaded super, or one of the other unleaded fuels, using an appropriate additive to each tankful of fuel,

However, if and when you do have to remove your cylinder head for any reason, I strongly recommend you take the opportunity to modify it so you can use U.L.P, without the need for additives.

Happy Healeying,

John Dowsett

N.S.W. AUSTRALIA Austin-Healey OWNERS CLUB FLAT CHAT **March 2001**

TECHNICAL REPORT

VACUUM ADVANCE

Here's a list of Healeys, Distributor serial numbers and vacuum figures that I've pieced together from various sources.

MODEL	DISTRIBUTOR NO	TYPE	VACUUM
BNI and BN2	40320A	DNU4	7-18-2
	40495	DM2P4	
	40422	DM2P4	5-17-10
	40520	DN2P4	5-17-10
BN4 100/6	40532	DM6A	5-12-8
BN6 12 port	40581A	DM6	5-12-8
BN7, BT7, Mk1 & 11			
and early BJ8	40662A	DM6	5-12-8
BJ7 from 29F3562	40920A	D6	5-12-8
BJ8	40966A	25D6	5-12-8

I can't guarantee that this is 100% correct and would appreciate more information from anyone, who could help to compile an accurate listing, Each distributor has a different advance curve and I'll provide these later. The advance curve is only suitable for the model/engine in standard form. Change the cam, compression ratio and breathing and the advance curve must also change. This is best done on a dynamometer. The meaning of the vacuum figures the first figure is the vacuum, in inches of mercury (Hg) that the vacuum advance commences, the Second figure is the vacuum in inches of mercury (Hg) that maximum vacuum advance is reached, the last figure is in degrees of advance at the crankshaft.

Apply maximum vacuum, slowly decrease and check the figures on a vacuum gauge. You can do with some rubber hose and a vacuum gauge by sucking on the hose and measuring the movement of the lever of the vacuum unit. One degree of distributor advance at the lever is .0268" (8 degrees = .2144").

The earlier type of vacuum units have a hexagon nut and washer on the front and the spring and spacer can be removed and altered to achieve correct figures.

The vacuum advance is an economy device and operates at maximum advance when the car is cruising at 50 - 60 mph with a small throttle opening. The additional advance provided by the vacuum unit ensures complete burning of the mixture and you get that lovely clean pale grey exhaust. So get out there and check your vacuum now!

Have Fun

Barry Campbell

N.S.W. AUSTRALIA Austin-Healey OWNERS CLUB FLAT CHAT

October 1995

Note: - With modern LRP or Unleaded the exhaust will always be black.
DON HARDIE 2002

TECHNICAL REPORT

Hi - last month's report on Vacuum units there was a typographic error. Explaining the figures 5-12-8, stamped on the vacuum unit, the last figure 8 indicates, the degrees of advance at the distributor not at the crankshaft The crank degrees are double that of the distributor i.e. 16. Adding up the advance of a BJ8, maximum distributor advance 18 plus 8 of vacuum is 26 degrees. Double that plus the static advance of 10 equals a total of 62 degrees. This will only happen at 6400 rpm on light throttle.

CHECKING OPERATION OF VACUUM ADVANCE

Here's a way of checking that your advance is working correctly and that there are no leaks from the carburetor connection of the vacuum pipe to the unit.

Firstly, polish the brass conductor on the rotor with Brasso until it is a mirror finish. Disconnect the vacuum pipe at the carbie and run the engine. A drive around the block is best. Remove the distributor cap and examine the burn mark on the rotor. It will be approx. 1/8" to 3/16" wide, caused by the spark jumping across from the rotor to the six electrodes in the cap. Reconnect the vacuum pipe to the carbie. Take the car for another run up to 60mph and cruise on light throttle, do this a couple of times. The burn mark on the tip of the rotor will have grown forward to the extended part of the rotor and will now be about 3/8" wide. This indicates that the vacuum advance is increasing by 8 degrees at the distributor. If you don't get approx. this result you may have a leak- in the pipe or a blockage in the drilling in the carbie. Check the pipe by attaching a small diameter rubber hose at the carbie end and suck on it while watching the movement in the top of the distributor and hold it there with your tongue. If the vacuum advance lever creeps back you've got a leak. Blow down the drilling in the carbie with the throttle open and make sure its not blocked.

Burnt area (no vacuum) Burnt area (with vacuum)

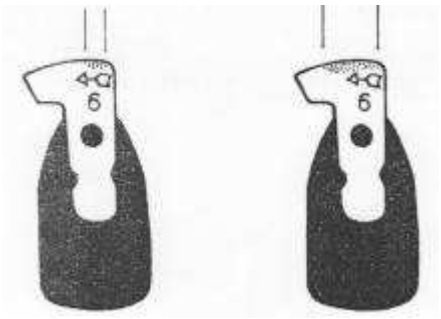

N.S.W. AUSTRALIA Austin-Healey OWNERS CLUB FLAT CHAT

November 1995

UPDATE:
The burn area may not show up very well after a short run, but if you first paint the area with silver paint it will show up really well. B.C. Dec 2001

REAL HEALEY NATTER

N.S.W. AUSTRALIA Austin-Healey OWNERS CLUB FLAT CHAT

MAY 1997

Recently there have been a couple of enquiries about 4 cylinder water pump seals. One that has been used successfully (18,000 miles over 5 years) is a Sealol ¾" Type 6 seal, a fairly standard swimming pool pump seal.
The impeller which is held on by a nut is the easiest to do, although the press on type can be done, **using great care and with good luck** (as it is thin cast iron and could be over 50 years old).

SHAFT
Enlarge the 5/8" rear section to ¾" by using a sleeve of 19mm X 1.6mm 316 stainless steel tube secured by Loctite Super Bearing Mount. Chamfer the front of the tube to allow the thrower to work if required. A stainless steel ½" ID washer is required at the rear to seat the seal's rubber ring.

BEARINGS
While you are at it, replace the bearings with pre-greased sealed bearings (LJ 5/8 2RS) and you won't have to remember to grease them or clean up grease thrown around the engine bay if you are over enthusiastic with the grease gun. Discard the old oil seal and cut a ¼" slot in the holder, this is to drain any water that might get there in. Refit the oil seal holder, using silicon rubber, with the slot to the bottom. Also remove the grease nipple and plug up the hole with a short bolt.

SEAL.
Remove the protruding step on the carbon face, do this by rubbing the step on 400 wet and dry on a flat surface and then trial fit the seal. If it is to long replace the square section rubber ring with a ¾" ID X 3/32" 'O' Ring (BS 116) to do the sealing at the back, also the ½" washer will have to have it's outside reduced to 0.95" to fit into the seal's rear recess. The ceramic seat supplied is not used as the carbon face runs on the pump body's cast iron seat.

IMPELLER
Shorten the front of the impeller where it touches the ½"washer by the amount required to obtain the clearance of 0.010" to 0.020" between the pump body and the vanes of the impeller.

The seal came from a Swimming Pool Parts Supplies, as it was noticed when replacing the one in a swimming pool pump, it looked suitable for the use in the 100 Water Pump.

Sealol ¾" Type 6 seals are available from most bearing suppliers (ask for a ¾" pool pump seal).

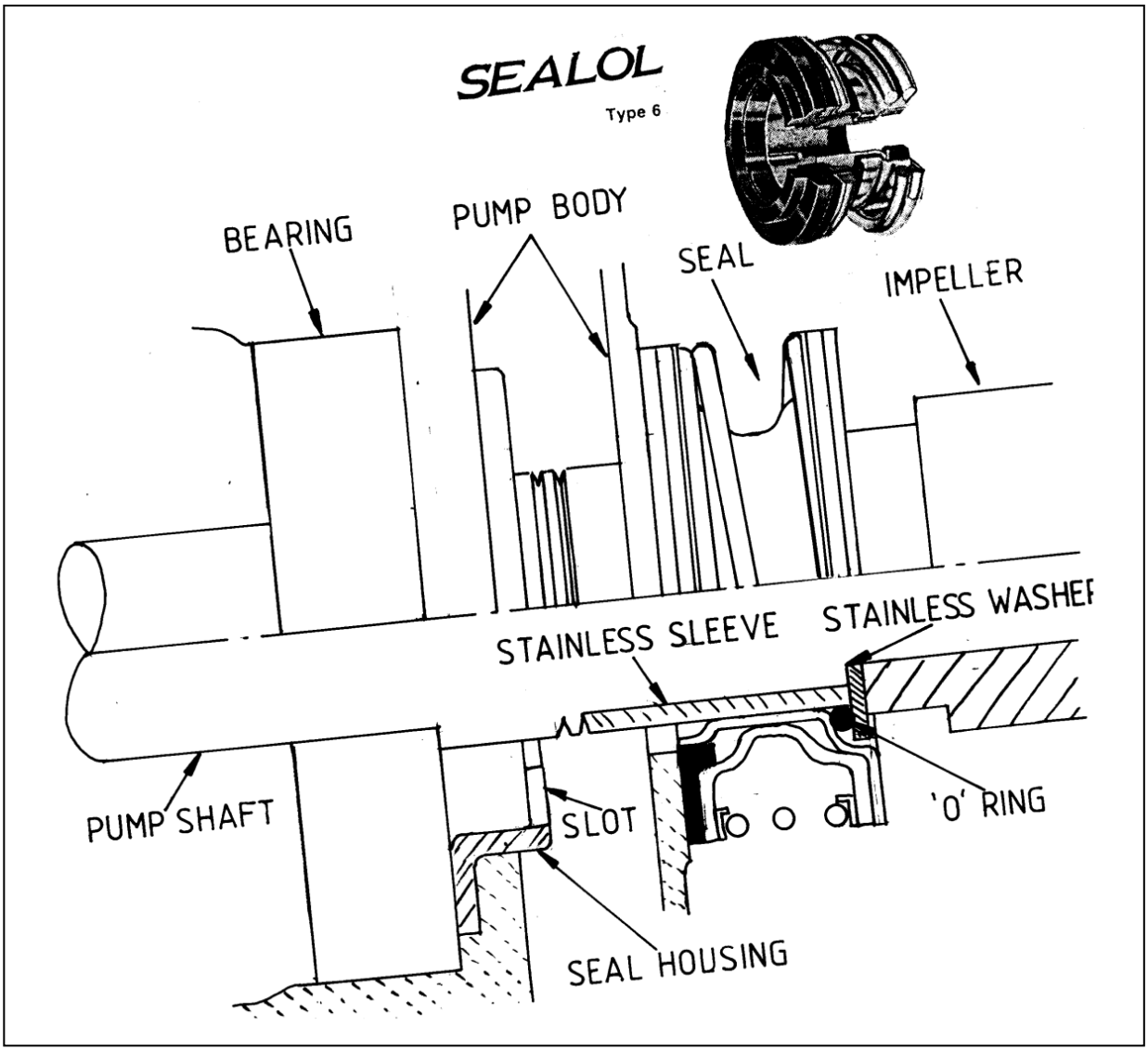

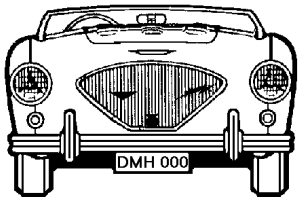

DMH-000
(The Hardie's 100)

UPDATE - At the last engine rebuild in March 1999 the seal was checked (after 28,600 miles over 7 years) and found to be ok, but replaced with a new one and new bearings fitted. After another 30,450 miles it is was still running ok in March 2008, but the pump was again reconditioned it as the engine was out.

A spare is always carried in the boot (trunk), which has at times has helped out fellow 100 owners.

NOTE – Other company's seals are - KY Type 6, John Crane Type 6, PAC-SEAL Type 16, and US SEAL Type A,

REAL HEALEY NATTER

Lifted from HEALEY NORTHWEST June 2002

****

Weeping Cylinder Head Cure

The rule is, all rebuilt B series engines weep between the block and head, between the 2nd and 3rd spark plug. Some actually "piss."

To remedy this problem: -

The center exposed head stud, RH side, between #2 and #3 is the guide stud - the hole in the head is 3/8 whereas the other holes are 7/16". Clean out the stud hole in the head with a 3/8" drill. Polish that stud, at least. Ensure a chamfer at the threaded hole in the block. Chase the threads on the stud, nut, and block (3/8"-18 and 3/8"-24). Ensure the head is planed to 0.001". Ensure that the top of the block is cleaned to a SMOOTH finish. Fit the studs back into the block with only about 5 lb-ft torque. Place a THIN film of clear silicone, RTV, sealant on the RH side of the head gasket. Into that EXTREMELY THIN film, place two strands of stranded, flexible wire about six inches long, twisted together, along the outboard side of the gasket, between its edge and the water jacket holes so that the thickness of the head gasket is effectively increased by several thousandths.

GOODBYE LEAKS.

Thanks to John Twist ©

(Maybe this technique would work for a AH 100-4 head, as well?)

This tech tip borrowed from the Columbia Gorge MG Club

****

THE HARDIE'S 100

P.S. The above article is about the SMALL B Series Engine fitted to MGs etc., but the idea might be worth a try on a weepy 100.

RUN TO WOLLOMBI PUB 18 05 2016

Don & I went on a weekday run with The Healey Club to Wollombi pub for lunch. Half way there, our Healey started making some nasty rattling noises in the engine. We limped to the pub, had some lunch, didn't think it was worth even having a look under the bonnet and called a tow truck. Don rode home in the tow truck with our ailing lady and I got a ride home in Greg Denning's BJ8, which is back on all fours after breaking an axle and having its own experience with a tow truck at Yarramalong. We are happy to report our Healey had nothing more serious than a blown head gasket and will be back on the road soon.

Margo Hardie

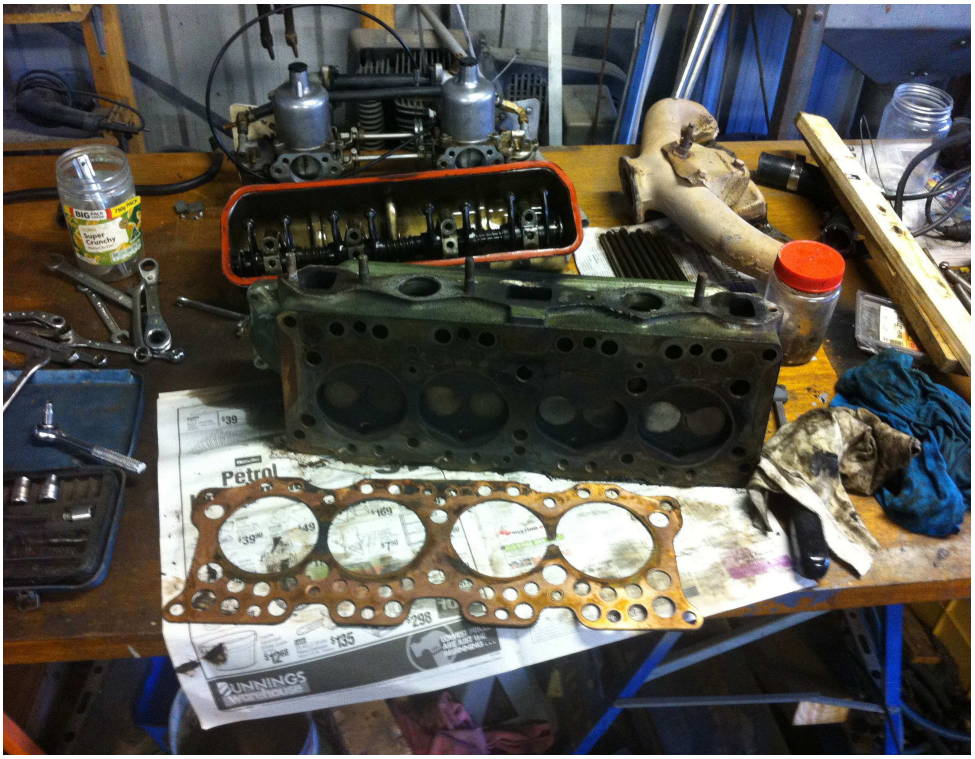

DAYTON CHROME WHEELS

Quite some time ago I was given a set of 50 spoke painted wheels, to replace my old and wobbly 48 spoked ones, that the owner didn't want as he had installed a new set of Dayton chrome wheels on his 3000.
I persevered with these for quite some time but couldn't get rid of steering shudder at about 95 Kmh, even after many tries with "on car" balancing.
Finally Margo said she couldn't put up with it anymore and would shout the 100 a nice shinny set of chrome wires.
As the left hand rear splines had been recently replaced I got a new one for the right side.
A local Tyre Service changed the back tyres to two of the new ones and new tyres to the other new ones for the front. He was able to balance them due to the way the Dayton wheels were made.
No more wobble!!!!

Balancing Instructions for Spline-Drive Wire Wheels

Special attention is required when balancing spline-drive (sometimes referred to as "center-lock" or "Dunlop style") wire wheels. To properly balance this style of wheel, it must be centered on the balance apparatus in exactly the same manner that it is centered on the car. The two seating surfaces that center the wheel can be seen in Figure #1. These two bevels are typically "machined" surfaces as opposed to less exact "rough-cast" surfaces. Note that the splines are used to drive the wheel, not center the wheel. Balancing spline-drive wheels by using a computer spin balancer is only effective if the wheel is centered as shown in Figure #1.

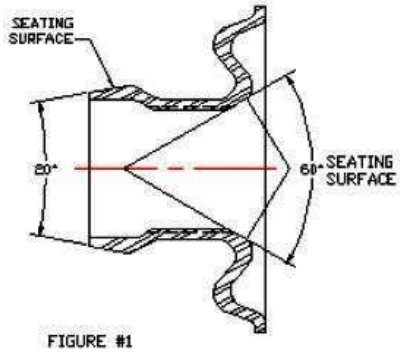

FIGURE #1

Correct Centering Position

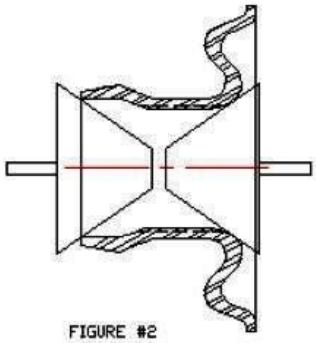

FIGURE #2

Can Use for Daytons Manufactured After 1990

Some spin balancers have a cone set designed specifically for spline-drive wheels but these are very rare. Dayton Wheel Products spline-drive wire wheels manufactured since 1990 have a fully machined hub that allow most cones to accurately center the wheel.

Dayton Wheel Concepts
115 Compark Road – Dayton, Ohio 45459
800-862-6000 – www.daytonwirewheel.com

Installation Instructions for Dayton Knock-off Wheels

Warning:

Read before mounting tire on wheels. Wheels cannot be returned for fitment reasons after tires have been mounted. Power assisted tire changers can cause damage to wheels. Tubes must be used with tubetype wire wheels Stud length exceeding one and one-eighth inch (> 1 $^{1}/_{8}$") will not allow wheels to be tightened properly. Radial tires must be remounted on the same side of the vehicle they were removed from. Do not change direction of rotation. Do not inflate over 50 psi (40 psi in California). Read and observe all warning and instruction labels affixed to wheels.

WHEELS CAN DETACH FROM CAR WITHOUT WARNING IF YOU:

1. Use studs longer than 1-1/8" (Item B).
2. Install adapters on wrong side of car (Item B).
3. Use parts that are worn out (Item C).
4. Fail to tighten caps (Item G).
5. Tow vehicle backwards.

Clean hubs

Inspect hubs and brake drums for any obstructions, (lock clips, rivets, balancing weights, etc.). Remove or resolve any obstruction that prevents a flush fit between the wheel and axle hub.

Install Adapters

Check stud length. If the stud is longer that 1-1/8" long cut the stud to shorten or use a spacer behind the adapter.
To install adapters correctly place hub adapter marked "left", and with white mesh thread guard, on left side of car. Hub adapter marked "right", and with red or brown mesh thread protector, must be installed on right side of car. ***THIS IS IMPORTANT! DO NOT INSTALL ANY OTHER WAY!***
After hub adapters have been placed on hubs, be sure that adapter plate fits flat against hub and brake mounting pad. If there is any interference point of contact must be found and any high point removed. If this is not done wheels will not run true when installed.
When tightening lugnuts:

1. Under no circumstances should high impact wrenches be used to secure lugnuts as this can cause damage to the adapter and can result in improper lugnut torque.
2. Minimum thread engagement must be at least one times the diameter of the stud i.e., the typical thread engagement for a ½" X 20 thread would be a minimum of ½" of thread. Again, if spacers are used, be certain that the spacer is in place during this inspection.
3. Do not lubricate the lugnuts or stud threads.
4. Run all lugs up fully before tightening.
5. Tighten all lugnuts using a criss-cross pattern to assure the even distribution of pressure while tightening the lugnuts.
6. Once installed adapters should rotate freely by hand with no rubbing or interference.
7. Remove plastic mesh thread protectors.
8. Apply a thin coating of grease to threads of adapter. Also, place a thin coating of grease on taper or bevel on back of the knock-off caps and in the cap threads. Keep dirt away from knock-off cap threads.

TORQUE SPECIFICATIONS

LUG NUT SIZE	TORQUE/ FT. LBS.
3/8"	45
7/16"	60
1/2"	75
12mm	70
14mm	85

Retorque after 25 miles

Important:

Be certain that you use the proper Dayton Wheel Concepts lugs for your specific Dayton Wire Wheel. Use of any other lug nut will void your warranty.

Tire Mounting Information

Follow tire manufacturers rim width recommendations when installing tires.
Install air valve stem on *tubeless wheels*. Use care to insure proper fit and non-leakage.
Tubes must be used on tubetype wheels. Follow tube manufacturers recommendations for proper size and.
Use of power operated tire mounting equipment should be avoided in order not to mar or damage wire wheels.
Begin tire installation procedure by mounting only ***one*** tire and again checking on the vehicle for suspension and fender clearances. Clearances should be checked at front wheels and rear wheels.
Do not over-pressurize to seat tire beads. Under no circumstances should 50 P.S.I.G. (40 P.S.I.G. in California) be exceeded.

Fit Wheels

Place wheels on adapters and push firmly toward the back of the adapter. When the rear of the wheel center is sitting on the back of the adapter, rock the wheel so that the drive teeth engage completely and firmly. Do not use wheels or adapters if teeth become worn down.

Thread On Cap

Thread knock-off caps on the adapter. Markings on caps indicate proper tightening direction. "Left side" caps must be used on the left side of car and "Right side" caps must be used on right side of car.

Tighten Caps

While car is still on jacks run the knock-off caps up tight. Two-eared and 3-eared caps must be tightened with a Dayton Wire Wheel lead hammer. Octagon, Dome, Diamond, and OTD caps must be tighten with the appropriate wrench and lead hammer. Wrench tightening alone is not sufficient.

Test

Spin wheels by hand to make sure there is no rubbing against brake calipers. Also, rock wheel assembly to verify that the knock-off cap has seated completely in the wheel. No looseness should be noticeable.

Retighten Caps

Lower the car and hammer the caps until there is no movement under the hardest blow of the hammer. After the car has been run 25 miles, be sure to re-check the knock-off cap for tightness. The wheels seat themselves on the adapters after the initial run-in and knock-off caps can be tightened further. ***THIS IS IMPORTANT.*** Knock-off caps must be very tight to prevent wear of the drive teeth. Continue to tighten knock-off caps every 100 miles for the first 500 miles. Then check tightness every few weeks. **WIRE WHEELS** should always be checked for tightness of knock-off caps regularly.

TECHNICAL REPORT
WHEELS

If you haven't had your wheels off for a while, now is a good time to give them a clean and check for summer. Jack up the front and put car stands to support the chassis. Arrange a rod or screwdriver on a support that you can push in close to the outer part of the rim and spin the wheel slowly. Watch die tip of the rod to check for out of round or wobble.

Tap each spoke with a screwdriver, the ones that go "PLONK' instead of “PLINK” can be either loose or broken. Chrome spokes break more easily than painted steel as the chroming process makes them brittle (hydrogen embritlement).

If you find any problems at this stage one of the best people to contact for repair and truing is Bill Graham at Rockdale - phone 567 1668. (No longer in business DH 20/10/01)

Holding the tyre rock the wheel vertically and horizontally to check- for any looseness. Ascertain where the looseness is by having someone watch from underneath. Bearings, King Pins, Steering joints. If all is well and the wheels have been balanced on the car, remove the spinner and mark the wheel and hub so as you can put the wheel back exactly as it was taken off. The wheel is balanced with the hub, brake drum or disc and spinner and it's best to maintain the same relationship, file a small mark on the wheel and hub in line with the valve.

Clean all the old grease off the splines on the wheel and hub. Don't use solvent on the rims as it can go through the spokes and rot the tubes. Check the splines if they come to a sharp knife-edge then they're worn out and will probably "clunk” each time you accelerate and brake hard. New wheels and hubs is the way to fix this. Bloody expensive though. With everything nice and clean, use a thick-bodied grease for the splines, the bevel at the back on the hub and the bevel on the wheel where the spinner tightens and wipe some grease on the threads of the spinner.

It's important to tighten the wheels whilst they're off the ground. This tightens them without any load on the splines. Don't belt the living daylights out of the spinners, a good firm hit with the copper hammer until tight is enough.

Have Fun,

BarryCampbell.

N.S.W. AUSTRALIA Austin-Healey OWNERS CLUB FLAT CHAT

November 1994

TECHNICAL REPORT

Last Month I covered some points regarding the front suspension, and would like to follow this up with a discussion on wheels and tyres.

It is stating the obvious to point out the importance of your wheels and tyres, as they are the only thing between your car and the road; but when was the last time you looked closely at them? These components must transmit all of the suspension loads, cornering and braking forces, and a little care is well worthwhile. In no particular order of priority, I suggest you consider the following points: -

1. **Broken Spokes.** These can be detected by visual inspection, or by tapping each spoke with a screwdriver or similar object. Good spokes will go "ping" but a loose or broken spoke will sound more like "glug". I find the best way to check for broken spokes is to remove the wheel and check the inside of the hubs. As most spokes fail by breaking off the knob at the end of the spoke inside the hub, this makes it very easy to detect. If only about 3 or 4 spokes are loose or broken, but otherwise the wheel looks in good condition, these spokes can be easily replaced. However **if** more than this are broken, and the wheel generally looks a bit sad, I would think seriously about replacing the wheel. this can be particularly true of original 48 spoke wheels, which by definition are now at least 35 to 40 years old.
2. **Tyres**. I still occasionally see Healeys being driven on tyres, which could be anything from 20 to 40 years old. I am talking of course about cars, which are regularly driven on the road, not concourse cars. These tyres generally have plenty of tread, but are showing signs of surface cracking, and have the resilience and stickiness of Bakelite. A set of new radials is not all that expensive in the scheme of things, but could transform the handling of your car as well as being a lot safer. I also question the wisdom of continuing to drive on a tyre which is getting close to reaching the "tell-tale" strips - when you work out the economics, you are saving at most about ~$10 to $15 worth of rubber and risking a skid on a wet road.
3. **Balancing**. Contrary to what most tyres fitters will tell you, the only correct way to balance a wire wheel is to mount it the way it is mounted on the car, i.e. on the inside and outside tapered faces on your wheel. The Club has an adapter, I also have one I can lend you if you have a problem. If a balance problem persists, look for an out-of-round wheel or a bump in the tyre.
4. **Splines**. Severely worn splines, on either hub or wheel, indicate replacement is needed. Severe wear is evidenced by a sharp corner on the top of this spline instead of a small flat section.
5. **Greasing**. A moderate amount of grease should be maintained on the hub splines to protect against wear and corrosion. Excessive grease will only be pushed off by the wheel, to be thrown outwards by centrifugal force to make your brake drums and wheels messy. A good idea is rather to grease the inside of the wheel splines. The tapered portion of the hub, where the wheel locates, should at most be given only a light smear of grease to prevent corrosion.
6. **Paint.** Finally, on new wheels, be sure to remove the paint from the tapered surfaces before mounting, otherwise, this paint will wear off the first time you drive the car, causing the knock-ons to work loose.

Enough for now, Happy Healeying,
John Dowsett

Tip Of the Month.
The original copper-hide hammers can still damage the surface of your nice new knock-ons Lead hammers are now available.

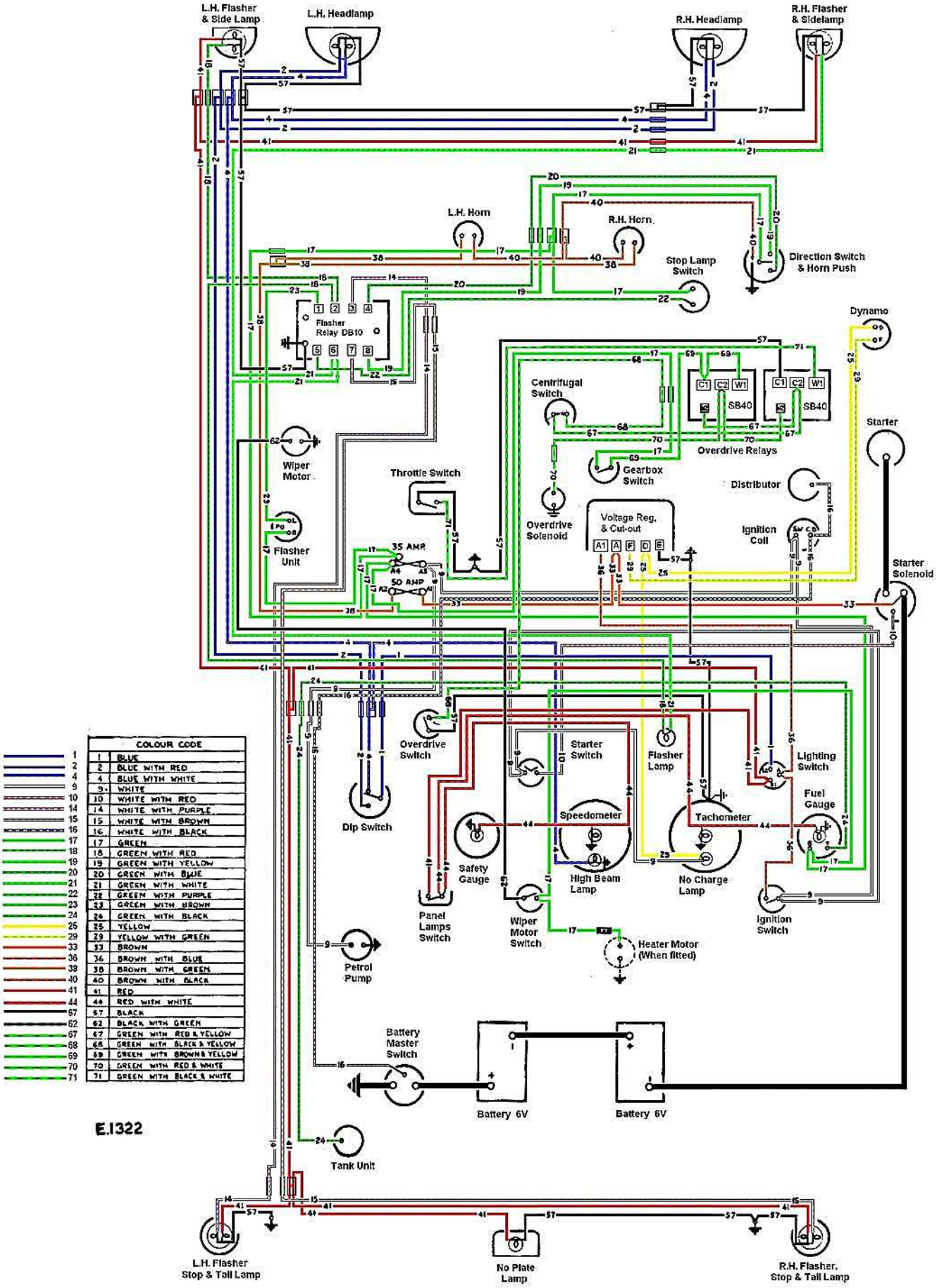

	COLOUR CODE
1	BLUE
2	BLUE WITH RED
4	BLUE WITH WHITE
9	WHITE
10	WHITE WITH RED
14	WHITE WITH PURPLE
15	WHITE WITH BROWN
16	WHITE WITH BLACK
17	GREEN
18	GREEN WITH RED
19	GREEN WITH YELLOW
20	GREEN WITH BLUE
21	GREEN WITH WHITE
22	GREEN WITH PURPLE
23	GREEN WITH BROWN
24	GREEN WITH BLACK
25	YELLOW
29	YELLOW WITH GREEN
33	BROWN
36	BROWN WITH BLUE
38	BROWN WITH GREEN
40	BROWN WITH BLACK
41	RED
44	RED WITH WHITE
57	BLACK
62	BLACK WITH GREEN
67	GREEN WITH RED & YELLOW
68	GREEN WITH BLACK & YELLOW
69	GREEN WITH BROWN & YELLOW
70	GREEN WITH RED & WHITE
71	GREEN WITH BLACK & WHITE

Fig. 26. A general arrangement of the electrical circuits together with components in relation to their location on the chassis and bodywork.

Colour Enhanced Wiring Diagram
Austin Healey BN1
Ian Richardson, Esk, Old

WIRING IN BRITISH CARS

It is not widely known these days that up to 1965 most British carmakers with Lucas electrics, had one basic colour code. Feed wiring was solid colour using seven basic colours; this did tend to vary gradually after 1965 but wasn't too far away up until 1967. Big Healeys used this code until 1965. BJ 8 with separate flasher and side lights deviated slightly. Feed wiring is usually heavier i.e. –those wires that carry current to regulator, switches etc.

The seven colours being: -

BLACK	All earth wiring, most of which is found behind the dash panel, running from gauge to gauge and then to the body (earth).
BROWN	Battery circuit, solenoid/regulator, solenoid/ignition, regulator/light switch and regulator/radio.
YELLOW	Charging circuit, including dash warning light.
WHITE	Ignition (unfused) – key on light up circuits like fuel pump and overdrive
GREEN	Fused accessories via ignition switch like wipers, stop light switch, flasher switch and fuel gauge.
BLUE	Head light switch to dip switch.
RED.	Dash, park side and taillights.

When a problem arises, check feed wire for power first, using a test lamp or multimeter, then switch wires and then the suspect unit. Very often loose or corroded connections or bad earth between the unit and chassis is all that has caused the problem, especially on old vehicles. Always solder bullet and eye connectors or wiring repairs using resin cored solder – **not soldering flux**. Scrape and sand wire and connector clean before attempting to solder. Insulate with tape where necessary. Penetrating oil is great where there's a risk of corrosion. Crimped joints I personally have no use for, so many of them fail.

One consideration worth thinking about, especially with the rising value of our cars, would be more fuses. Old unfused circuits are potentially dangerous. While it is not practical to slap a fuse into "every thing that moves", lighting circuits are vulnerable by way they are routed through the vehicle, and by crass up and miss matching during repairs.

Good luck and Happy Healeying,

Eric Comer. ©

WIRING IN BRITISH CARS

Today the Lucas system of identification of wiring circuits has become standard throughout practically all British cars. Whatever the make, a green wire with a black tracer should always be the wire from the fuel gauge to the tank unit, and a brown wire with a red tracer should link the interior light with its switch. This standardisation is extremely helpful in locating faults, and we have considered it well worthwhile to publish the colour code in full.

GENERALLY speaking, the main trunk of the harness is run along that side of the vehicle on which the generator control box is fitted. This method enables the majority of the single cables to reach their destination with the shortest possible run, and so avoid excessive voltage drop.

Subsidiary looms are used for connecting instruments and units to the main harness, a practice which facilitates the assembly of vehicles having the body separate from the chassis whilst having no disadvantages when wiring a vehicle with an integral body and chassis. These subsidiary looms (switch panel, steering column, lamps. etc.) are coupled to the main harness by means of single or multiple detachable snap connectors housed in strong rubber sheaths. The connectors are liable to corrosion from the weather and to dislodgment during mechanical repairs; where failure of an electrical unit is suspect, therefore, first check to see that the connector is in order, remembering that a high-resistance connection can be caused at these points through corrosion.

COLOUR CODING

A cable harness or wiring diagram, car be very confusing if looked on as a whole, and the service engineer is advised to view it not a mass of unconnected wires, but as a series of separate-but nevertheless independent - functional circuits. These in turn can be broken down into simple circuits covering each component with its switch and three wires - feed, switch wire, and return wire.

In the Lucas system a colour is allocated to each of the seven main circuits. Feed wires have a braided cover woven in the main colour only; switch wires have the main feed colour with a different-coloured tracer woven spirally into the braiding; all return or earth leads are in black. Colours allocated to the main circuits are standardised and cover both car and light-medium commercial vehicles fitted with either C.V.C. or third-brush generators.

Main and Tracer Colours adopted for identification of individual circuits

Main Colour.	Tracer	Circuit
Brown		Battery to ammeter, and feeds to battery, auxiliary fuse and other units supplied direct from battery.
Brown	Red	Interior light switch to interior light.
Brown	Yellow	Horn relay to wind-tone horns.
Brown	Blue	Control-box terminal (A l) to lighting and ignition switch.
Brown	White	Ammeter to control-box terminal (A 1).
Brown	Green	Feeds to units supplied direct from battery, through fuse.
Brown	Black	Horn-push connection.
Yellow	.	**Generator main terminal to control box and ignition warning**
Yellow	Green	Generator field terminal to control box.
White		All feeds from ignition switch (unfused), and supply to ignition aux. fuse.
White	Red	Starter push to starter solenoid switch.
White	Blue	Choke solenoid switch to solenoid.
White	Green	Petrol reserve valve switch to valve or petrol pump switch to No. 2 petrol pump.
White	Purple	Petrol pump switch to No.1 petrol pump.
White	Black	Ignition coil to distributor.
Green		All feeds- through ignition auxiliary fuse. (Units operative only when ignition is switched on.)
Green	Red	Trafficator switch to left-hand trafficator and warning light.
Green	Yellow	Oil pressure warning light.
Green	White	Trafficator switch to right-hand trafficator and warning light.
Green	Purple	Stop lamp, switch to STOP lamp,
Green	Brown	Car heater rheostat to heater, motor, and warning light. Also reverse light switch to reverse light.
Green	Black	Fuel gauge to tank unit.

Blue . Main feed from lighting switch to headlamp circuit. Blue Red Dip switch to headlamp dip filaments. Blue

White Dip switch to headlamp main filaments. Red Feeds from lighting switch to side and tail lamps and to circuits controlled by side and tail lamp switch. Red. Yellow. Fog lamp switch to fog lamp. Red Blue Pass lamp switch to pass lamp. Red

White Switches to panel and interior lights.
Red Black Boot light to boot light switch.
Black All earth wires.
Black Green Windscreen wiper switch to wiper motor. (This is an exception to the general cable identification system.)

LIFTED FROM: -15th AUGUST 1955AUSTRALIAN MOTOR MANUAL

Black	Black - Ground/Earth
Brown (N)	Brown - Always Hot - NOT Fuzed
	Purple - Always Hot - Fused (late cars)
White (W)	White - Hot with Igniton on - not fused
Green (G)	Green - Hot with ignition on - fused
Blue (U)	Blue - Head light main feed - not fused
Red (R)	Red - Park/Tail Lights - not fused

The above wire colors may also have a thin line of color running through them, know as a tracer

Red-White (RW)	Red is Park/Tail light circuit, the white tracer is for Panels Lights
Blue-White (UW)	Blue is Headlight circuit, the white tracer is High Beams
Blue-Red (UR)	Blue is Headlight circuit, the red tracer is Low Beams
Green-Yellow (GY)	Green is hot with ignition on-fused, the yellow tracer is for right directional
Green-Blue (GU)	Green is hot with ignition on-fused, the blue tracer is for left directional
White-Black (WB)	White is hot with ignition not fused, the black tracer goes from the coil to distributor
Green-Black (GB)	Green is hot with ignition on-fused, the black tracer is fuel gauge from gas tank
-Black (PB)	Purple is always hot-fused, black tracer is for horn button (late cars)

N.S.W. AUSTRALIA
Austin-Healey
OWNERS CLUB
FLAT CHAT

In the United Kingdom the British Standard BS-AU7 determines colour coding of automobile wiring. Lucas use a 7 colour set in which plain colours - purple, green, blue, red, white, brown and green are supplemented by a further group using a base colour with a thin line trace of a different colour, thus:

Black	Earth (ground) connections
Green	Feeds to auxiliary devices controlled by the ignition switch, e.g. wipers, flashers, etc
White	Base colour for ignition circuits
Red	Sidelights (parking lights) and rear lights
Blue	With white trace main beam headlamp with red trace - dip (meeting) beam headlamp
Purple	Auxiliary devices not fed via the ignitior switch, e.g. horn, interior light
Brown	Main battery feed

Other colours are used, according to equipment specifications, e.g.: light green, pink, slate. Handbooks are usually printed in black and white only, so the cable colours are identified by a lettering code, such as:

B	Black	P	Purple
U	Blue	G	Green
N	Brown	S	Slate
R	Red	W	White

When a cable has a base colour and a second colour spiral trace the code is two letters, for example: WG = White with green trace

Main	Tracer	Destination
Black		All earth connections
Black	Blue	Tachometer generator to tachometer
Black	Brown	Tachometer generator to tachometer
Black	Green	Screen wiper switch to screen wiper (single speed) relay to radiator fan motor
Black	L. Green	Vacuum brake switch to warning light and/or buzzer
Black	Orange	Radiator fan motor to thermal switch

Black	Pink	
Black	Purple	
Black	Red	Electric speedometer
Black	Slate	
Black	White	Brake fluid level warning light to switch and handbrake switch
Black	Yellow	Electric speedometer
Blue		Lighting switch (head) to dipper switch
Blue	Black	
Blue	Brown	
Blue	Green	
Blue	L. Green	Screen wiper motor to switch
Blue	Orange	
Blue	Pink	Headlamp dip beam fuse to left hand headlamp (when independently fused)
Blue	Purple	
Blue	Red	Dipper switch to headlamp dip beam. Headlamp dip beam fuse to right-hand headlamp (when independently fused)
Blue	Slate	Headlamp main beam fuse to left hand headlamp or inboard headlamps (when independently fused)
Blue	White	Dipper switch to main beam (subsidiary circuit headlamp flasher relay to headlamp). Headlamp main beam fuse to right-hand headlamp (when independently fused). Headlamp main beam fuse to outboard headlamps (when outboard headlamps independently fused). Dipper switch to main beam warning light
Blue	Yellow	Long range driving switch to lamp.
Brown		Main battery feed
Brown	Black	Alternator warning light, negative side
Brown	Blue	Control box (compensated voltage control only) to ignition and ignition switch, eg wipers, flashers, etc lighting switch (feed)
Brown	Green	Dynamo “F” to control box “F” Alternator field “F” to control box “F”
Brown	L. Green	Screenwiper motor to switch
Brown	Orange	
Brown	Pink	
Brown	Purple	Alternator regulator feed
Brown	Red	Compression ignition starting aid to switch. Main battery feed to double pole ignition switch (a.c. alt. system)
Brown	Slate	
Brown	White	Ammeter to control box. Ammeter to main alternator terminal

Brown	Yellow	Dynamo “D” to control box “D” and ignition warning light. Alternator neutral point
Green		Accessories fused via ignition switch (subsidiary circuit fuse A4 to hazard switch (terminal 6))
Green	Black	Fuel gauge to fuel tank unit or changeover switch
Green	Blue	Water temperature gauge to temperature unit
Green	Brown	Reverse lamp to switch
Green	L. Green	Hazard flasher unit to hazard pilot lamp
Green	Orange	Low fuel level warning light
Green	Pink	Choke solenoid to choke switch (when fused)
Green	Purple	Stop lamps to stop lamp switch
Green	Red	Left-hand flasher lamps
Green	Slate	Heater motor to switch (or to fast) (on 2-speed motor)
Green	White	Right-hand flasher lamps
Green	Yellow	Heater motor to switch, single speed (or to “slow” on two-speed motor)
L. Green		Instrument voltage stabilizer to instruments
L. Green	Black	Screen jet switch to screen jet motor
L. Green	Blue	Flasher switch to left-hand flasher warning light
L. Green	Brown	Flasher switch to flasher unit “L”
L. Green	Green	
L. Green	Orange	
L. Green	Pink	Flasher unit “L” to emergency switch (simultaneous flashing)
L. Green	Purple	Flasher unit “F” to flasher warning light
L. Green	Red	Fuel tank changeover switch to right-hand tank unit
L. Green	Slate	Fuel tank changeover switch to left-hand tank unit
L. Green	White	
L. Green	Yellow	Flasher switch to right-hand flasher warning light

Purple		Accessories fused direct from battery
Purple	Black	Horn or horn relay to horn push
Purple	Blue	
Purple	Brown	Horn fuse to horn relay (when horn is fused separately)
Purple	Green	
Purple	L. Green	
Purple	Orange	Aerial lift motor switch DOWN
Purple	Pink	
Purple	Red	Boot light switch to boot light
Purple	Slate	Aerial lift motor to switch UP
Purple	White	Interior light to switch (subsidiary circuit door safety lights to switch)
Purple	Yellow	Horn to horn relay
Red		Side and tail lamp feed
Red	Black	Parking switch to left-hand side lamp
Red	Blue	
Red	Brown	Variable intensity panel lights (when used in addition to normal panel lights)
Red	Green	Lighting switch to side and tail lamp fuse (when fused)
Red	L. Green	Screen wiper motor to switch
Red	Orange	Parking light switch to right-hand side lamp
Red	Pink	
Red	Purple	Map light switch to map light
Red	Slate	
Red	White	Panel light switch to panel lights
Red	Yellow	Fog lamp switch to fog lamp
Slate		Window lift
Slate	Black	Window lift
Slate	Blue	Window lift
Slate	Brown	Window lift
Slate	Green	Window lift
Slate	L. Green	Window lift
Slate	Orange	Window lift
Slate	Pink	Window lift
Slate	Purple	Window lift
Slate	Red	Window lift
Slate	White	Window lift

Slate	Yellow	Window lift
White		Ignition control circuit (un-fused) (ignition switch to ballast resistor)
White	Black	Ignition coil CB to distributor contact breaker. Rear heated window to switch or fuse TAC ignition.
White	Blue	Choke switch to choke solenoid (un-fused). Rear heater fuse unit to switch. Electronic ignition TAC ignition unit to resistance.
White	Brown	Oil pressure switch to warning light or gauge.
White	Green	Fuel pump No. 2 or left-hand to change-over switch.
White	L. Green	Screen wiper motor to switch.
White	Orange	Hazard warning feed (to switch)
White	Pink	Radio from ignition switch
White	Purple	Fuel pump No. 1 or right-hand to change-over switch
White	Red	Solenoid starter switch to starter push or inhibitor switch
White	Slate	Tachometer to ignition coil
White	Yellow	Starter inhibitor switch to starter push. Ballast resislor to coil. Starter solenoid to coil
Yellow	White	Overdrive
Yellow	Black	
Yellow	Blue	Overdrive
Yellow	Brown	Overdrive
Yellow	Green	Overdrive
Yellow	L. Green	Screen wiper motor to switch
Yellow	Orange	
Yellow	Pink	
Yellow	Purple	Overdrive
Yellow	Red	Overdrive
Yellow	Slate	
Yellow	White	

Typical Low Voltage Wire Sizes

Air Conditioning- 10 GAUGE	Heater Switch- 10 GAUGE
Alternator- 10 GAUGE	Horn Button- 13 GAUGE
Ammeter- 10 GAUGE	Horn To Relay- 10 GAUGE
Cigarette Lighter- 14 GAUGE	Ignition Switch- 12 GAUGE
Clock- 18 GAUGE	Low-Amps Circuits- 18 GAUGE
Coil Wire- 16 GAUGE	Parking Lights- 16 GAUGE
Dome Lights- 16 GAUGE	Radio To Fuse Blocks- 14 GAUGE
Driving Lights- 14 GAUGE	Single Bulbs- 18 GAUGE
Gauges- 14 GAUGE	Starter To Relay- 16 GAUGE
Generator (Charging)- 10 GAUGE	Stoplights- 16 GAUGE
Generator To Starter- 16 GAUGE	Tail Lights- 16 GAUGE
Headlight Circuit- 14 GAUGE	Turn Signals- 16 GAUGE
Headlight Switch To Fuse Block- 12 GAUGE	CD To Fuse Block- 14 GAUGE
Heater Leads- 16 GAUGE	Windshield Wiper & Washer- 14 GAUGE

Wire Gauge Selection Table 12 Volt Circuit

AMPS	3'	5'	7'	10'	15'	20'	25'
0 to 5	18	18	18	18	18	18	18
6	18	18	18	18	18	18	18
7	18	18	18	18	18	18	18
8	18	18	18	18	18	16	16
10	18	18	18	18	16	16	16
11	18	18	18	18	16	16	14
12	18	18	18	18	16	16	14
15	18	18	18	18	14	14	12
18	18	18	16	16	14	14	12
20	18	18	16	16	14	12	10
22	18	18	16	16	12	12	10
24	18	18	16	16	12	12	10
30	18	16	16	14	10	10	10
40	18	16	14	12	10	10	8
50	16	14	12	12	10	10	8
100	12	12	10	10	6	6	4
150	10	10	8	8	4	4	2
200	10	8	8	6	4	4	2